UNCLASSIFIED

Declassified by the Director of Marine Corps History and Museums in accordance with the provisions of CNO ltr Op-942D323 Jcy, Ser: 10770 P942 of 12 October 1971.

P. B. [illegible] 8 Mar 77
Signature/Date

UNCLASSIFIED

Unclassified

Force

Misc. Statistics

July - Sept 1971

~~SECRET~~

MARINE CORPS COMMAND CENTER

TABLE OF CONTENTS

7 JULY 1971

UNCLASSIFIED

SECTION I - MARINE CORPS FORCES - WORLD WIDE	LIST OF EFFECTIVE TABS	DATE OF LASTEST CHANGE
ALLOCATION OF MARINE CORPS PERSONNEL.	11	23JUN71
SELECTED PERSONNEL AND AIRCRAFT DATA.	12	7JUL71●
UNITED STATES MARINE CORPS RESERVE.	13-1	30DEC70
	13-2	23DEC70
	13-3	7JUL71●
	13-4	23DEC70
MISCELLANEOUS NON-FMF UNITS	14-1	30JUN71
(MARINE BARRACKS)	14-2	30JUN71
(MARINE SECURITY GUARD BATTALION)	14-3	14APR71
(MARINE DETACHMENTS AFLOAT)	14-4	14APR71
	14-5	30JUN71
SECTION II - STATUS OF FLEET MARINE FORCES		
STATUS OF FMF UNITS	21-1	7JUL71●
	21-2	7JUL71●
	21-3	7JUL71●
	21-4	7JUL71●
	21-5	7JUL71●
	21-6	30JUN71
	21-7	7JUL71●
	21-8	7JUL71●
	21-9	7JUL71●
RECAPITULATION OF FMF ACTUAL STRENGTHS.	22	7JUL71●
DISTRIBUTION OF MAJOR GROUND EQUIPMENT AND AIRCRAFT	23	7JUL71●
SECTION III - DISPOSITION OF FLEET MARINE FORCE UNITS		
FLEET MARINE FORCE DISPOSITION, DISTRIBUTION BY BATTALION/ SQUADRON AND MOVEMENTS	31-1	7JUL71●
	31-2	7JUL71●
FMF PACIFIC UNIT LOCATIONS AND STRENGTHS (MIDPAC/EASTPAC)	32	30JUN71
FMF PACIFIC UNIT LOCATIONS, STRENGTHS AND OSD CEILING CONSIDERATIONS (WESTPAC)	33	7JUL71●
LANDING FORCES - 7TH FLEET.	34	7JUL71●
FMF ATLANTIC UNIT LOCATIONS AND STRENGTHS	35	7JUL71●
LANDING FORCES - MEDITERRANEAN AND CARIBBEAN.	36-1	30JUN71
GUANTANAMO BAY BATTALION.	36-2	30JUN71
SECTION IV - GENERAL		
CHRONOLOGY OF SIGNIFICANT EVENTS.	41-1	17MAR71
	41-2	21MAR71
	41-3	23JUN71
	41-4	16JUN71
	41-5 (missing)	7JUL71
STATISTICAL SUMMARY OF III MAF OFFENSIVE OPERATIONS IN VIETNAM.	42-1	21APR71
	42-2	18NOV70
	42-3	18NOV70
	42-4	10MAR71
	42-5	12MAY71
	42-6	12MAY71
LANDING FORCES - 7TH FLEET; SUMMARY OF OPERATIONS IN RVN.	43-1	18NOV70
	43-2	18NOV70
	43-3	18NOV70
U.S. MARINE CORPS AIRCRAFT LOSSES IN SEASIA	44-1	18NOV70
	44-2	18NOV70
	44-3	18NOV70
	44-4	18NOV70
	44-5	18NOV70
	44-6	18NOV70
	44-7	18NOV70
	44-8	18NOV70
	44-9	25NOV70
	44-10	5MAY71
	44-11	5MAY71
USMC/ENEMY CASUALTIES IN SEASIA; CUMULATIVE DOD CASUALTY FIGURES ON U.S. MILITARY PERSONNEL AND COMPARATIVE USMC/ENEMY KIA IN CONNECTION WITH THE CONFLICT IN RVN.	45-1	7JUL71●
	45-2	7JUL71●
	45-3	26MAY71
	45-4	30JUN71
DISPOSITION AND STRENGTH OF MAJOR U.S. AND FW FORCES IN RVN	46-1	7JUL71●
	46-2	7JUL71●
COMUSMACV STAFF, PRINCIPAL MARINE OFFICERS HQ MACV.	47	7JUL71●
REPUBLIC OF KOREA MARINE CORPS	48-1	30JUN71
REPUBLIC OF VIETNAM MARINE CORPS	48-2	7JUL71●
VIETNAM GEOGRAPHIC AND CLIMATE DATA	49-1	18NOV70
	49-2	18NOV70
CHRONOLOGY OF FMF DEPLOYMENT AND STRENGTH IN RVN.	410-1	20JAN71
	410-2	25NOV70
	410-3	25NOV70
	410-4	25NOV70
	410-5	25NOV70
	410-6	25NOV70
	410-7	9DEC70
	410-8	10MAR71
	410-9	28APR71
	410-10	23JUN71
	410-11	7JUL71
REDEPLOYMENT OF USMC UNITS FROM RVN	411-1	7JUL71
	411-2 (missing 1-62)	7JUL71

Unclassified

CONTENTS OF THIS PUBLICATION
DOWNGRADED AT 3 YEAR
INTERVALS
DECLASSIFIED AFTER 12 YEARS
DOD DIR 5200.10

UNCLASSIFIED ~~SECRET~~

MARINE CORPS
JUL 20 1971
REFERENCE BRANCH

Unclassified

[redacted]

MARINE CORPS COMMAND CENTER

SELECTED PERSONNEL AND AIRCRAFT DATA

UNCLA

UNCLASSIFIED

PERSONNEL

7 JULY 1971

	STRENGTH	PERCENT USMC	PERCENT FMF	PERCENT FMFPAC
USMC TOTAL	213,980 *	100.00		
FLEET MARINE FORCES	94,745	44.28	100.00	
FMF ATLANTIC	38,275 #	17.89	40.40	
FMF PACIFIC	56,470 #	26.39	59.60	
VIETNAM	547 ¢	00.26	00.58	00.97

SOURCE: * HQMC 1080-20 (ESTIMATED PERSONNEL DATA) AS OF 19JUN71.
MARES FORSTAT REPORT DATED 17MAY71. ADJUSTED BY REDEPLOYMENT INCREMENT VII AS OF 7JUL71.
¢ MACV WEEKLY STRENGTH REPORT AS OF 2400, 1JUL71.

AIRCRAFT

	FIXW	HELO	TOTAL	PERCENT USMC	PERCENT FMF	PERCENT FMFPAC
USMC TOTALS **	975	616	1,591	100.00		
FLEET MARINE FORCES @	678	544	1,222	76.81	100.00	
FMF ATLANTIC @	287	213	500	31.43	40.91	
FMF PACIFIC @	391	331	722	45.38	59.09	

SOURCE: ** DC/S AIR STATUS BOARD PHOTO AS OF 26MAR71.
@ MARES FORSTAT REPORT DATED 17MAY71. ADJUSTED BY REDEPLOYMENT INCREMENT VII OF 30JUN71.

UNCLASSIFIED

Unclassified

TAB 12

[redacted]

[redacted]

MARINE CORPS COMMAND CENTER

UNCLASSIFIED

IV MARINE AMPHIBIOUS FORCE

7 JULY 1971

UNIT	NOTE	LOCATION	AUTHORIZED STRENGTH		ACTUAL STRENGTH				SHORTAGE		REPORT	REPORT
					CL II(3)		CL III					
			OFF	ENL	OFF	ENL	OFF	ENL	OFF	ENL	TO	BY
4TH MARINE AIRCRAFT WING		GLENVIEW, ILL.	84	181	75	174	4	7	5	0	EL TORO	M+2
MWHS-4		DETROIT, MICH.	23	162	20	151	1	11	2	0	EL TORO	M+2
MWTS-4		GREEN BAY, WISC.	6	184	6	177	0	0	0	0		M+2
MACG-48			167	1059	146	862	16	197	5	0	EL TORO	
HaHS-48		GLENVIEW, ILL.	48	265	38	186	6	79	4	0		M+25
MASS-4		EL TORO, CALIF.	35	161	33	139	2	22	0	0		M+27
MACS-17		WILLOW GROVE, PA.	28	211	24	171	4	40	0	0		M+28
MACS-23		DENVER, COLO.	28	211	26	178	1	33	1	0		M+29
MACS-24		ANDREWS AFB, MD.	28	211	25	188	3	23	0	0		M+30
MACS-48		CHICAGO, ILL.	12	218	10	165	2	53	0	0		M+2
MWSG-47			56	802	40	587	10	214	6	1	EL TORO	
HaMS-47		MINNEAPOLIS/ST. PAUL, MINN.	45	570	31	390	8	179	6	1		M+20
WERS-47		WYOMING, PA.	11	232	9	197	2	35	0	0		M+20
MAG-41			161	1375	146	1130	6	240	9	5	EL TORO	
HaMS-41		DALLAS, TEXAS	38	294	33	238	2	56	3	0		M+12
MABS-41		MEMPHIS, TENN.	20	432	14	323	1	109	5	0		M+12
VMF-112		DALLAS, TEXAS	32	196	31	180	0	16	1	0		M+17
VMF-321		ANDREWS AFB, MD.	32	196	32	181	0	15	0	0		M+18
VMF-351		ATLANTA, GA.	32	196	30	181	2	15	0	0		M+19
MATCU-71		MEMPHIS, TENN.	7	61	6	27	1	29	0	5		M+15
MAG-42			188	1444	174	1113	3	325	11	6	EL TORO	
HaMS-42		ALAMEDA, CALIF.	38	294	33	227	2	67	3	0		M+9
MABS-42		ALAMEDA, CALIF.	20	432	16	320	1	112	3	0		M+9
VMA-142		JACKSONVILLE, FLA.	41	219	38	155	0	64	3	0		M+15
VMA-133		ALAMEDA, CALIF.	41	219	39	190	0	29	2	0		M+16
VMA-134		LOS ALAMITOS, CLAIF.	41	219	41	182	0	37	0	0		M+17
MATCU-72		OLATHE, KAN.	7	61	7	39	0	16	0	6		M+16
MAG-43			179	1421	165	1173	7	241	7	7	EL TORO	
HaMS-43		WILLOW GROVE, PA.	38	294	33	266	2	28	3	0		M+15
MABS-43		WILLOW GROVE, PA.	20	432	16	335	1	97	3	0		M+15
VMF-511		WILLOW GROVE, PA.	32	196	28	176	3	20	1	0		M+20
VMA-131		WILLOW GROVE, PA.	41	219	41	197	0	22	0	0		M+21
VMA-322		S. WEYMOUTH, MASS.	41	219	40	167	1	52	0	0		M+22
MATCU-73		WILLOW GROVE, PA.	7	61	7	32	0	22	0	7		M+18
MAG-46			405	2425	386	2083	10	335	9	7	SANTA ANA	
HaMS-46		SANTA ANA, CALIF.	39	302	33	250	2	52	4	0		M+10
MABS-46		EL TORO, CALIF.	30	611	23	465	3	146	4	0		M+5
HMM-764		SANTA ANA, CALIF.	59	253	57	231	1	22	1	0		M+10
HMM-768		LAKEHURST, N.J.	59	253	59	234	0	19	0	0		M+12
HMM-772		LAKEHURST, N. J.	59	253	59	235	0	18	0	0		M+12
HMM-776		GLENVIEW, ILL.	59	253	59	221	0	32	0	0		M+12
HMM-777		DALLAS, TEXAS	59	253	58	234	1	19	0	0		M+10
VMO-4		DETROIT, MICH.	34	186	33	177	1	9	0	0		M+10
MATCU-76		S. WEYMOUTH, MASS.	7	61	5	36	2	18	0	7		M+10
VMJ-4		DALLAS, TEXAS	22	119	18	104	2	15	2	0	EL TORO	M+20
VMR-234		GLENVIEW, ILL.	49	242	31	199	7	43	11	0		M+10

Unclassified

TAB 13-3

UNCLASSIFIED [redacted]

[redacted]

MARINE CORPS COMMAND CENTER

STATUS OF FMF UNITS**

7 JULY 1971

UNCLASSIFIED

UNIT *	NOTE	UNIT COMMANDER	LOCATION	STRENGTH USMC	STRENGTH USN	UNIT READINESS☆ CURRENT RATE	RSN	P	S	R	T	EXPECTED RATE	EXPECTED BY	MAJOR EQUIPMENT
FMF				94745	2871									
MIDPAC				5618	169									
FMFPAC		LTGEN W. K. JONES	HAWAII	56470	1900	C1		1	1	1	1			
HQ FMFPAC				950	36									
H&S BN		COL R. G. LAUFFER	CP SMITH	883	27	C1		1	1	1	1			
DET 2, 21ST DENTAL CO		CAPT M. R. HAMILTON (USN)			9	C1		1	1	1	1			
11TH CIT (CADRE)		CAPT K. W. CLEM				C4	N	5	5	5	5			
HQ SQDN		LTCOL C. E. DORFFELD	KANEOHE	67		C4	P	4	1	1	1	C4	710731	5/T-28B, 2/UH-34D, 2/US-2B, 1/VH-34D
1ST ANGLICO		MAJ J. B. LEONARD	SDIEGO	155	5	C4	S	2	4	2	1	C3	710601	
SU 1, 1ST ANGLICO (MACV)	*	LTCOL E. E. SHOULTS	SAIGON	182	10	C1		1	1	1	1			
1ST RADIO BN (-)		LTCOL E. D. RESNIK	KANEOHE	449		C1		1	1	1	1			
1ST MARINE BRIGADE		BGEN V. A. ARMSTRONG	KANEOHE	3882	118	C4	P	4	2	3	3	C3	710930	
H&S CO		CAPT H.J. TRAUTWEIN, JR.		265	13	C1		1	1	1	1			
1ST ITT		CAPT T. E. NADOLSKI		15		C1		1	1	1	1			
DET 1, 21ST DENTAL CO		CDR J. D. CRAWFORD(USN)			13	C1		1	1	1	1			
COMM SPT CO, 7TH COMM BN		MAJ R. T. HIMMERICH	ENROUTE KANEOHE											
3D MARINES(-)(REIN)		LTCOL K. L. CHRISTENSEN	KANEOHE			C4	N	5	4	4	5			
HQCO (-)		CAPT C. S. CERTAIN		182	19	C4	N	5	4	4	5			
1STBN		MAJ P. J. KIESELBACH		899	50	C4		4	1	1	4	C4	710801	6/105 HOW TD, 8/106MM RR, 8/81 MORT
2DBN		MAJ F. W. BEEKMAN		118		C4		5	4	4	5			8/106MM RR, 8/81 MORT
CO A, 3D ENGR BN		CAPT R. I. EDWARDS	KANEOHE	109		C3	X	3	3	3	2			
CO D, 3D AMTRAC BN		CAPT K. R. BURNS		167		C3	X	3	1	1	3	C1	710901	3/LVTP-5 CMD, 44/LVTP-5, 1/LVTR
PROV SERV BN		MAJ R. E. LANGTON		226		C4	P	4	4	4	4	C3	710930	
CO A(-)(REIN), 3D MT BN (CADRE)		CAPT R. E. MANUEL												
CO A(-)(REIN), 3D SP BN (CADRE)														
1STBN(-), 12TH MAR		MAJ L. E. KOLEBER												12/105 HOW TD
CO A(-), 3D RECON BN (-) (CADRE)														
CO A(-)(REIN), 3D MED BN (CADRE)														
MAG-24		COL R. E. CAREY	KANEOHE	1901	23	C3	X	4	2	3	4	C3	710415	
H&MS-24		LTCOL C. L. PHILLIPS		314		C3	S	2	3	3	2	C2	710601	1/C-117D, 5/CH-46A, 2/TA-4F
MABS-24		LTCOL W. R. LEDBETTER		358	23	C3	P	3	2	2	2	C4	710715	
MATCU-70		WO Q. F. GOUR JR.		40		C4	P	4	2	1	4	C3	710801	
VMFA-122		LTCOL L. FURSTENBERG		198		C4	P	4	1	4	4	C3	710601	8/F-4B
VMFA-212		LTCOL J. W. MOORE		218		C3	X	4	1	3	3			17/F-4J
VMFA-235		LTCOL F. L. FARRELL JR.		226		C3	X	4	1	1	4	C2	710630	16/F-4J
MACS-2		LTCOL P. L. ELLIOTT		188		C4	R	4	3	4	3	C3	710801	
HMM-262		LTCOL F. K. WEST JR.		213		C4	P	4	1	1	4	C1	710825	30/CH-46D
HMH-463		MAJ M. E. EDWARDS		146		C4	P	4	4	4	4			15/CH-53D
DET, VMO-6														6/OV-10A
DET, HML-367(-)														8/UH-1E
WESTPAC				26984	857									
FMFPAC														
III MAF		LTGEN D. J. ROBERTSON	CP COURTNEY	26984	857									
H&S CO				142		C1		1	1	1	1			
3D MARDIV(-)(REIN) (III MAF)	*	MAJGEN L. METZGER	CP COURTNEY	14622	674	C2	T	1	1	1	2	C1	710705	
HQBN		COL W. D. POMEROY		1605	38	C2	R	1	1	2	2	C1	710705	
3D ITT	22	CAPT M. R. LAMB												
11TH ITT	22	CAPT C. K. ABLES												
15TH ITT	22	CAPT E. R. KRAMER	CP HANSEN											
17TH ITT	22	CAPT G. H. JOHNSON JR.												
3D CIT		CAPT R. E. SHROYER		17		C1		1	1	1	1			
1ST SSCT		CAPT T. L. STROHECKER		8		C3	S	1	3	1	1	C1	710805	
3D DENTAL CO		CAPT W. J. KENNY (USN)		4	70	C1		1	1	1	1			

* PARENTHETIC UNIT INDICATES OPCON WHEN DIFFERENT FROM ORGANIZATIONAL STRUCTURE.

TAB 21-1

Unclassified

[redacted]

UNCLASSIFIED

[redacted]

UNCLASSIFIED

MARINE CORPS COMMAND CENTER

STATUS OF FMF UNITS **

7 JULY 1971

UNIT *	NOTE	UNIT COMMANDER	LOCATION	STRENGTH USMC	STRENGTH USN	UNIT READINESS ☆ CURRENT RATE	RSN	P	S	R	T	EXPECTED RATE	BY	MAJOR EQUIPMENT
4TH MARINES	24	COL R. T. HANIFAN JR.	CP HANSEN			C2	P	2	1	1	2	C2	710501	
HQCO		MAJ R. F. LUSK		219	6	C2	T	1	1	1	2	C1	710601	
1STBN		LTCOL D. G. ROBISON		1026	40	C2	P	2	1	2	2	C1	710605	
2DBN		LTCOL W. H. NULTY		984	42	C2	P	2	1	1	2	C1	710505	8/106MM RR, 8/81 MORT
3DBN	1	LTCOL A. J. CASTELLANA		1026	36	C2	P	2	1	1	2	C1	710605	8/106MM RR, 8/81 MORT
9TH MARINES		COL J. V. MCLERNAN	CP SCHWAB			C2	P	2	1	2	2	C2	710605	
HQCO		CAPT M. H. CRAFTON JR.		213	4	C2	R	1	1	2	2	C2	710605	
1STBN		LTCOL F.W.M.WOODROW JR.		992	36	C1		1	1	1	1			8/106MM RR, 8/81 MORT
2DBN (31ST MAU)	2*	LTCOL F. J. JOHNSON JR.	31ST MAU	1059	37	C2	P	2	1	2	2	C1	710705	8/106MM RR, 8/81 MORT
3DBN		LTCOL B. S. SNELL	ENROUTE OKINAWA	1041	37	C2	R	2	1	2	1	C1	710605	8/106MM RR, 8/81 MORT
12TH MARINES (-)		COL J. J. SNYDER	CP HANSEN			C2	T	1	1	1	2	C1	710605	
HQ BTRY(-)		CAPT D. J. LABOISSIERE		261	6	C2	R	1	1	2	2	C1	710605	
2DBN		MAJ R. S. VARNEY		534	14	C2	T	1	1	1	2	C2	710605	24/105 HOW TD
3DBN		LTCOL W. J. HALLISEY		561	11	C2	T	1	1	1	2	C1	710705	24/105 HOW TD
4THBN(-)(REIN)		LTCOL K. G. PATTERSON		468	11	C2	R	1	1	2	1	C2	710605	17/155 HOW SP
3D PLAT, 1ST 8" HOW BTRY	4													2/8" HOW SP
3D SERV BN(-)		COL D. J. HUNTER	CP HANSEN	746	19	C2	T	1	2	1	2	C1	710605	
3D TANK BN(-)		LTCOL C. R. STIFFLER		643	10	C2	T	1	1	1	2	C1	710605	48/M48 TANK, 5/M51 VTR, 8/M67 TANK
9TH MT BN(-)		MAJ J. R. TRAYLOR		318	7	C2	X	1	1	1	1	C1	710605	
3D MED BN(-)		LTCOL F. E. CLARK JR.		149	160	C3	P	3	3	3	2	C2	710605	
1ST HOSPITAL CO(CADRE)		LTJG H. D. CASH(USN)	CP SCHWAB	32	11	C4	R	5	2	2	5			
3D MT BN(-)		MAJ B. L. PARKS		212	6	C2	P	2	1	1	1	C2	710605	
3D RECON BN(-)		LTCOL T. R. STUART		337	22	C2	P	2	1	1	2	C1	710731	
3D ENGR BN(-)(REIN)	17	LTCOL C. R. GIBSON		719	8	C2	P	2	1	2	2	C2	710605	
CO D(REIN), 7TH ENGR BN		MAJ D. R. COMER	CP HAGUE					5	5	5	5			
BRIDGE PLAT, 1ST BRIDGE CO								5	5	5	5			
7TH COMM BN(-)		LTCOL M. W. MCCOURY	CP SCHWAB	486	7	C2	P	2	1	2	2	C2	710605	
3D SP BN(-)		LTCOL R. L. ANDERTON	CP HAGUE	341	26	C2	R	2	1	2	2	C1	710530	
1ST AMTRAC BN(-)		LTCOL J. G. BUCKMAN	CP SCHWAB	621	10	C2	P	2	1	2	2	C1	710615	5/LVTE-1, 10/LVTP-5 CMD, 99/LVTP-5, 3/LVTR
1ST MAW (III MAF)	*	MAJGEN R. G. OWENS JR.	IWAKUNI	8908	133	C2	X	2	2	2	3	C2	710801	
JAPAN (1ST MAW ELEMENTS)				6023	109									
MWHS-1		COL W. C. KELLY		947	34	C2	S	2	2	2	1	C2	710601	
7TH CIT (1ST MAW)	*	WO J. A. CANONICO	IWAKUNI	13		C2	P	2	2	1	1	C1	710531	
11TH FORCE DENTAL CO(-)		CDR J. J. LYONS(USN)	IWAKUNI	1	24	C1		1	1	1	1			
3D SSCT		CAPT G. G. MEYERS		13		C2	R	1	2	2	2	C1	710601	
MACG-18(-)		COL C. T. WESTCOTT	IWAKUNI			C3	T	2	1	2	3	C2	710524	
H&HS-18(-)		MAJ L. E. OBENHAUS		251		C3	P	3	2	2	3	C3	710821	
MASS-2(-)		LTCOL T. G. DAVIS		193		C1	R	1	2	3	2	C2	710615	
MWCS-18		MAJ R. S. KAYE		204		C2	P	2	1	1	1	C1	710620	
MAG-12		COL E. J. RUTTY	IWAKUNI			C2	R	2	2	2	1	C1	710701	
H&MS-12		LTCOL K. L. BATT		562		C3	R	1	3	3	2	C2	710601	6/TA-4F
MABS-12		LTCOL J. L. DRIEFER		343	20	C2	X	3	1	2	2	C2	710831	
MATCU-62 (MAG-12)	*	CAPT A. E. PETERS		46		C4	P	4	1	3	3	C3	710701	
VMA-211		LTCOL D. G. GASCOIGNE		191	1	C2	R	2	2	2	2	C1	710701	19/A-4E
VMA-311		LTCOL J. T. HAGEN		215		C2	R	1	1	2	1	C2	710715	23/A-4E
VMA(AW)-533		LTCOL R. P. SPRIER		256	1	C2	R	2	1	2	2	C1	710701	11/A-6A
OTHER														
SU 2, H&MS-36			FUJI											

* PARENTHETIC UNIT INDICATES OPCON WHEN DIFFERENT FROM ORGANIZATIONAL STRUCTURE.

Unclassified

TAB 21-2

[redacted]

UNCLASSIFIED

~~SECRET~~

UNCLASSIFIED

MARINE CORPS COMMAND CENTER

STATUS OF FMF UNITS **

7 JULY 1971

UNIT *	NOTE	UNIT COMMANDER	LOCATION	STRENGTH USMC	STRENGTH USN	UNIT READINESS ☆ CURRENT RATE	RSN	P	S	R	T	EXPECTED RATE	EXPECTED BY	MAJOR EQUIPMENT
MAG-15		COL R. R. MILLER	IWAKUNI			C3	T	2	2	3	3	C2	710630	
H&MS-15		MAJ M. R. CADY		545		C2	R	1	2	2	2	C2	710801	6/TA-4F
MABS-15		MAJ R. L. BECKWITH		373	21	C3	R	2	2	3	2	C2	710630	
MATCU-60 (MAG-15)	*	CAPT J. W. LEFLAR JR.		50		C3	P	3	1	2	3	C2	710615	
VMFA-115		LTCOL R. R. POWELL		341		C4	R	2	1	4	3	C3	710712	15/F-4B
VMFA-232		LTCOL J. S. ROSENTHAL		334	1	C3	S	2	3	2	2	C2	710520	12/F-4J
VMCJ-1 (1ST MAW)	*	LTCOL S. S. EISENHAUER		391	1	C2	P	2	2	2	2	C2	710720	6/EA-6A, 11/RF-4B
MWSG-17		COL T. E. MULVIHILL	IWAKUNI			C3	R	2	2	3	3	C2	710801	
H&MS-17		LTCOL E. W. GILBERT		546	6	C3	R	2	3	3	2	C2	710701	4/C-117D, 3/C-54Q/R/S
WERS-17(-)		MAJ W. T. SINNOTT		208		C3	R	2	2	3	3	C2	710515	
OKINAWA (1ST MAW ELEMENTS)				2901	24									
MAG-36		COL R. J. ZITNIK	FUTEMA			C2	X	2	2	3	2	C1	710706	
H&MS-36 (-)		LTCOL R. E. SKINNER		589		C2	T	1	1	2	2	C1	710526	4/AH-1J 16/CH-46D, 4/CH-53D, 7/UH-1E
MABS-36		LTCOL V. J. GUINEE JR.		536	14	C3	R	2	1	3	2	C1	710615	
MATCU-66 (MAG-36)	*	CAPT W. S. ROGERS		42		C4	P	4	1	2	4	C3	710601	
MATCU-68 (MAG-36)	*	WO L. R. COXE		59		C2	S	2	1	1	1	C2	710615	
HMM-164 (31ST MAU)	2*	LTCOL A. J. KETTERING	31ST MAU	290	2	C1		1	1	1	1			14/CH-46D, 4/CH-53D, 4/UH-1E
HMM-165		MAJ D. M. GRIFFAY	FUTEMA	245	4	C2	R	2	1	2	1	C1	710515	14/CH-46D
HMH-462 (-)	2	LTCOL R. E. DYER		190	1	C2	R	1	1	2	1	C1	710615	11/CH-53D
VMO-6(-)		LTCOL J. L. NORTON		225		C2	R	2	2	2	1	C1	710811	14/OV-10A, 10/UH-1E
VMGR-152 (1ST MAW)	*	LTCOL R. W. DUPHINEY		336	1	C4	R	3	4	4	4	C3	710615	9/KC-130F
HML-367(-)		MAJ R. ANCHO												7/UH-1E
OTHERS														
DET, MASS-2			FUTEMA											
SU 1, WERS-17	12	WO E. O. HICKS		46		C2	S	1	2	2	1	C1	710701	
SU 1, H&MS-12	27	CAPT J. A. MILLER	NAHA	49		C2	S	1	2	2	2	C1	710730	
MACS-4		LTCOL M. S. JOLLEY SR.	FUTEMA	293	2	C3	P	2	1	2	3	C2	710611	
3D FSR		COL R. E. ROEDER	CP FOSTER	3296	50	C2	S	2	2	2	2	C2	710615	6/105 HOW TD, 1/155 HOW SP
H&S BN		LTCOL J. B. HARRIS SR.		1000	23	C2	S	1	2	2	2	C1	710515	3/155 HOW TD
SUPPLY BN		LTCOL J. W. FRIBERG		1248	27	C3	S	2	3	2	2	C2	710622	
NOP, 3D FSR (3D FSR)	*	CAPT C. W. SHIVER				C1		1	1	1	1			
MAINT BN		LTCOL H. I. FREY		1048		C2	S	2	2	2	2	C1	710601	2/LVTE-1, 1/106MM RR, 1/81 MORT

*PARENTHETIC UNIT INDICATES OPCON WHEN DIFFERENT FROM ORGANIZATIONAL STRUCTURE.

Unclassified

TAB 21-3

~~SECRET~~

UNCLASSIFIED

[redacted] UNCLASSIFIED

MARINE CORPS COMMAND CENTER

STATUS OF FMF UNITS **

7 JULY 1971

UNIT *	NOTE	UNIT COMMANDER	LOCATION	STRENGTH USMC	STRENGTH USN	UNIT READINESS☆ CURRENT RATE	RSN	P	S	R	T	EXPECTED RATE	BY	MAJOR EQUIPMENT
EASTPAC				23868	874									
FMFPAC														
I MAF		BGEN R. T. DWYER, JR.	CAMPEN			C2	T	2	1	1	2	C2	710515	
H&S CO				22										
1ST MAR DIV (-) (REIN)		BGEN R. T. DWYER, JR.	CAMPEN	11381	567	C4	P	4	2	2	4	C3	710701	
HQBN		COL R. N. BURHANS		1537	47	C4	P	4	2	2	4	C2	710601	1/81 MORT
1ST CIT		CAPT B. B. VORONIN		19		C1		1	1	1	1			
5TH ITT	14	CAPT R. A. KAROLY				C1		1	1	1	1			
9TH ITT	14	CAPT L. J. JANSEN				C1		1	1	1	1			
19TH ITT	14	CAPT A. D. BREWIN				C1	P	3	1	1	3	C2	710930	
21ST ITT	14	CAPT R. R. WELPOTT				C1		1	1	1	1			
23D ITT	14	CAPT R. D. TOMLIN				C1		1	1	1	1			
25TH ITT	14	CAPT H. K. LEE				C1		1	1	1	1			
2D SSCT		1STLT J. E. MANCUSO		9										
SCAMP		CAPT A. L. SELLECK JR.		24										
COMM SPT CO, 9TH COMM BN (CADRE)		CAPT D. B. DOWNING	CAMPEN	142		C2	R	1	1	2	1	C1	710531	
1ST CIVIL AFFAIRS GRP		CAPT C. F. DIVELBISS		35		C4	X	4	1	1	4	C3	710701	
DET, 5TH COMM BN														
1ST MARINES		LTCOL M. A. MOORE												
HQCO		CAPT H. W. GARDNER		227										3/106MM RR
1STBN		MAJ T. E. HEMINGWAY		801	3	C4	P	4	1	1	1	C1	710801	9/106MM RR, 10/81 MORT
2DBN		LTCOL R. E. MOSS		174	3									8/106MM RR, 10/81 MORT
3DBN		MAJ N. H. SMITH		1037	6									8/106MM RR, 8/81 MORT
3DBN, 3D MARINES(CADRE)		MAJ D. J. O'CONNOR	CAMPEN	122		C4	N	5	4	4	5			8/106MM RR, 8/81 MORT
5TH MARINES		LTCOL B. R. BURRITT	CAMPEN			C4	P	4	4	4	4	C3	710901	
HQCO		CAPT J. R. WILLIAMS		72	7	C4	P	4	3	3	4	C3	710901	
1STBN		MAJ W. T. MACY		142	2	C4	N	4	4	4	4	C4	710901	9/106MM RR, 8/81 MORT
2DBN		MAJ J. A. LINNEMANN		156	1	C4	P	4	4	4	4	C3	710901	2/106MM RR
3DBN		CAPT M. B. DARLING		148	2	C4	P	4	3	4	4	C4	710901	5/106MM RR, 8/81 MORT
7TH MARINES		COL A. A. MONTI	CAMPEN			C2	X	2	2	2	2	C1	710701	
HQCO		CAPT W. O. MOORE JR.		207	7	C2	R	1	1	2	1	C1	710701	
1STBN		MAJ R. C. HALL		448	15	C4	N	5	4	4	5			1/106MM RR, 8/81 MORT
2DBN		LTCOL T. L. SULLIVAN		1113	41	C2	T	1	1	1	2	C1	710701	8/106MM RR, 8/81 MORT
3DBN		LTCOL R. J. MILLE		1135	36	C2	T	1	1	1	2	C1	710701	8/106MM RR, 8/81 MORT
11TH MARINES(-)(REIN)		LTCOL B. F. STEWART	CAMPEN			C4	N	4	4	4	4	C4	710629	
HQ BTRY		1STLT W. T. WILLIAMS		86		C4	N	4	2	2	4	C4	710629	
1STBN		LTCOL B. F. OGDEN		58										6/M-30 MORT, 12/105 HOW TD, 4/155 HOW TD, 1/81 MORT
2DBN (CADRE)		MAJ C. K. MCAFEE		111		C4	N	4	4	3	4	C4	710621	8/106MM RR
3DBN		LTCOL B. F. STEWART		579	20	C2	T	1	1	1	2	C1	710701	18/105 HOW TD
1ST MP BN		LTCOL J. COLIA	ENR CAMPEN	1										3/81 MORT
1ST MT BN (REIN)	23	LTCOL J. J. DOWD JR.	CAMPEN	276	6	C3	R	1	2	3	2	C2	710801	
CO B, 9TH MT BN		CAPT R. F. WILLIAMS		93	1	C2	T	1	1	1	2	C1	710601	
1ST RECON BN		MAJ H. C. COOPER JR.		100	3	C4	N	4	4	4	4	C4	710624	
1ST FORCE RECON CO		CAPT D. L. COOK	CAMPEN	65	1	C4	P	4	4	4	4	C3	710701	

* PARENTHETIC UNIT INDICATES OPCON WHEN DIFFERENT FROM ORGANIZATIONAL STRUCTURE.

TAB 21-4

Unclassified

[redacted] UNCLASSIFIED

[redacted] UNCLASSIFIED

MARINE CORPS COMMAND CENTER

STATUS OF FMF UNITS **

7 JULY 1971

UNIT *	NOTE	UNIT COMMANDER	LOCATION	STRENGTH USMC	STRENGTH USN	UNIT READINESS☆ CURRENT RATE	RSN	P	S	R	T	EXPECTED RATE	BY	MAJOR EQUIPMENT
1ST TANK BN (REIN)	18	MAJ G. E. BERBAUM	CAMPEN	442	12	C4	X	4	2	2	4	C3	710701	5/M-51 VTR, 7/M-67 TANK, 15/M103 TANK, 38/M-48 TANK.
CO D, 3D TANK BN (CADRE)														
1ST SP BN	8	LTCOL T. F. GRAY		230	17	C4	X	4	2	2	4	C3	710930	
1ST ENGR BN	26	MAJ H. L. SOLTER, JR.	CAMPEN	129		C4	N	4	2	2	4	C4	710630	
7TH ENGR BN(-)(REIN)	11	MAJ C. N. WALL		361	14	C4	P	4	2	3	4	C3	710701	
1ST BRIDGE CO(-)(CADRE)		1STLT D. N. TAYLOR JR.		51		C4	X	4	1	3	4	C4	710801	
3D AMTRAC BN(-)	19	MAJ D. W. MAILLER	CAMPEN	381	15	C4	X	4	2	2	4	C3	710531	5/LVTE-1, 8/LVTP-5 COMD, 69/LVTP-5, 3/LVTR
1ST SERV BN (REIN)	10	COL G. K. REID		705	25	C4	P	4	3	2	4	C3	711001	
1ST SEARCHLIGHT BTRY (CADRE)								5	5	5	5			
1ST MED BN(-)	7	LCDR D.K. LIVINGSTON(USN)		134	244	C4	P	4	2	2	4	C3	710630	
3D 8" HOW BTRY SP		MAJ W. J. MCCALLUM												1/M-51 VTR, 6/8" HOW SP
1ST DENTAL CO		CAPT J. F. KING (USN)	CAMPEN	5	39	C4	R	4	4	4	4	C3	711001	
7TH SEP BULK FUEL CO(CADRE)								5	5	5	5			
FORCE TROOPS FMFPAC		BGEN P. G. GRAHAM	29 PALMS	1416	69	C4	R	3	3	4	3	C3	710601	
HQCO		MAJ E. L. ROTTSOLK		182	23	C1		1	1	1	1			
NOP, 1ST FSR		1STLT W. W. STEELE		23		C1		1	1	1	1			
9TH COMM BN(-)		LTCOL D. J. GARRET		391	12	C4	P	4	2	3	3	C3	711001	
13TH CIT (FORTRPS PAC)	*	CAPT A. G. WILSON				C2	R	1	1	2	1	C1	710615	
21ST DENTAL CO (-)		CAPT G. W. WALTER (USN)		2	19	C1		1	1	1	1			
1ST FAG		LTCOL R. O. GILLICK		19		C4	P	4	3	4	4	C3	710801	
HQ BTRY, 1ST FAG		1STLT G. R. MABRY		177	13	C2	T	1	2	2	2	C1	710601	
1ST 8" HOW BTRY SP (-)		MAJ L. J. SZAFRANSKI		126		C1	P	3	2	3	3	C2	710601	1/M-51 VTR, 6/8" HOW SP
1ST 175MM GUN BTRY SP		CAPT M. T. OWENS		48		C4	P	4	3	4	4	C3	710701	1/M-51 VTR, 6/175 GUN SP
3D 175MM GUN BTRY SP		CAPT D. L. ROSENBERG		98		C4	P	4	4	4	4	C3	710701	1/M-51 VTR, 6/175 GUN SP
4TH BN, 11TH MAR (1ST FAG)	*	LTCOL J. A. HAMILTON		248	2	C4	R	4	4	4	4	C3	711001	23/155 HOW SP
CO A(REIN), 7TH ENGR BN(-)		MAJ R. G. MEIBAUM	ENR 29 PALMS	102		C4	P	4	1	2	3	C3	710802	
3D HOSPITAL CO (CADRE)		LT W. L. NICHOLS (USN)	29 PALMS			C4	P	4	1	4	4	C3	710901	
3D MAW		BGEN L. E. BROWN	EL TORO	9899	196	C3	T	3	2	3	3	C2	710601	
MWHS-3		LTCOL H. E. SEXTON		663	122	C2	P	2	2	2	2	C1	710930	
6TH CIT		CAPT W. C. HOWEY		15		C1		1	1	1	1			
4TH SSCT		CAPT H. G. WHITE		9		C1		1	1	1	1			
13TH FORCE DENTAL CO		CAPT J. R. EUBANK(USN)			36	C4	P	4	1	1	1	C3	710915	
MWSG-37		COL R. A. SAVAGE				C3	X	4	3	3	3	C2	711001	
H&MS-37		MAJ L. K. WARN		503	1	C3	P	3	2	2	2	C1	711001	6/C-117D, 2/C-54P/Q
SU 1, H&MS-37		MAJ H. C. IVY		54		C2	P	2	1	1	1	C1	710601	
WERS-37		LTCOL M. PALLAI		225		C3	P	3	2	3	2	C2	710601	
VMGR-352(3D MAW)	*	LTCOL G. L. CARLSON		278	1	C3	X	4	2	2	4	C2	711001	10/KC-130F
MACG-38		COL J. W. DRURY	EL TORO			C2	S	2	2	2	2	C1	710601	
H&HS-38		MAJ D. T. WILSON		302		C2	R	1	2	2	2	C1	710601	
SU 1, H&HS-38		MAJ E. D. CHANEY JR.		62		C4	P	4	2	2	2	C3	710630	
1ST REDEYE PLAT		1STLT K. E. ROWE		32		C2	R	2	1	2	1	C1	710801	
3D REDEYE PLAT		1STLT J. B. DOWLING		34		C2	R	2	1	2	1	C1	710801	
2D LAAM BN		MAJ L. A. SOLLBERGER	YUMA	578	7	C2	X	3	1	2	2	C1	710801	
MACS-7		LTCOL J. O. GREGERSON	CAMPEN	200	2	C2	P	2	2	2	2	C1	710901	
MACS-1(-)		MAJ W. H. ALLEN	YUMA	212	3	C3	P	3	2	1	3	C2	710701	
NWS, SU 1, MACS-1(-)		CAPT H. POSTHUMA		65		C1		1	1	1	1			
MWCS-38		MAJ G. P. HOWLE	EL TORO	181		C2	R	1	1	2	1	C1	710930	
MAG-11		COL A. C. POMMERENK	EL TORO											
H&MS-11		LTCOL A. R. ANDERSON JR.		13										
MABS-11		LTCOL C. L. COMFORT												

* PARENTHETIC UNIT INDICATES OPCON WHEN DIFFERENT FROM ORGANIZATIONAL STRUCTURE.

Unclassified

TAB 21-5

[redacted] UNCLASSIFIED

UNCLASSIFIED

MARINE CORPS COMMAND CENTER

STATUS OF FMF UNITS**

7 JULY 1971

UNIT *	NOTE	UNIT COMMANDER	LOCATION	STRENGTH USMC	STRENGTH USN	UNIT READINESS ☆ CURRENT RATE	RSN	P	S	R	T	EXPECTED RATE	BY	MAJOR EQUIPMENT
EAST COAST														
FMFLANT		LTGEN E. E. ANDERSON	NORFOLK	38275	971	C1		1	1	1	1			
HQ FMFLANT				805	4									
H&SBN		COL L. H. DEVINE		726	4	C2	P	2	1	1	2	C1	710601	
HQ SQDN		LTCOL D. PRUDHOMME		79		C4	N	5	5	5	5			
2D MAR DIV		BGEN R. D. BOHN	CAMLEJ	15659	561	C2	P	2	1	1	2	C1	710731	
HQBN		COL G. R. HERSHEY		1867	36	C2	R	1	1	2	1	C1	710630	
2D ITT	20	MSGT R. L. GONYO												
4TH ITT	20	CAPT J. L. MCINTIRE												
6TH ITT	20	CAPT P. R. YOUNG												
SCAMP	20													
2D MARINES		COL C. B. REDMAN	CAMLEJ			C3	P	3	1	1	2	C2	710630	
HQCO		CAPT G. W. SCHLITZ		275	12	C1		1	1	1	1			
1ST BN	15	LTCOL A. M. GRAY		892	16	C3	P	3	1	1	2	C2	710531	8/106MM RR, 8/81 MORT
2D BN		LTCOL M. ROJO JR.		751	17	C4	P	4	1	1	2	C3	710630	8/106MM RR, 8/81 MORT
3D BN (-)(32D MAU)	*5	LTCOL T. J. WILLIS	MED	945	33	C1		1	1	1	1			8/106MM RR, 8/81 MORT
SU #1, H&SCO, 3D BN (2D MAR)	*	1STLT J. R. LOWEY	CAMLEJ	35	1	C4	N	5	5	5	5			
6TH MARINES		COL F. R. KRAINCE	CAMLEJ			C3	P	3	1	1	2	C2	710531	
HQCO		CAPT R. J. SNOWDEN		272	6	C2	R	1	1	2	1	C1	710531	
1ST BN (-)	6	LTCOL T. F. QUALLS		837	33	C3	P	3	1	1	1	C2	710514	8/106MM RR, 8/81 MORT
CO A, 1ST BN		MAJ J. D. FOREMAN		252	6									
2D BN		MAJ J. F. DELANEY		709	12	C4	P	4	1	1	3	C3	710531	8/106MM RR, 8/81 MORT
3D BN		MAJ S. B. WANNER		794	34	C2	P	2	1	1	1	C1	710514	8/106MM RR, 8/81 MORT
8TH MARINES		COL E. M. YOUNG	CAMLEJ			C2	P	2	1	1	1	C3	710630	
HQCO		1STLT H. L. SAWYER		261	5	C2	R	1	1	2	1	C1	710731	
1ST BN (-)		LTCOL M. H. IVINS		1145	18	C2	T	1	1	1	2	C1	710630	8/106MM RR, 8/81 MORT
2D BN (-)	9	LTCOL D. O. PAREDES	GTMO	761	26	C1		1	1	1	1			8/106MM RR, 8/81 MORT
CO E, 2D BN		CAPT C. O. KELLER	CAMLEJ	203	3	C4	N	5	5	5	5			
3D BN	13	LTCOL W. H. RICE		993	22	C1		1	1	1	1			8/106MM RR, 8/81 MORT
10TH MARINES		COL C. A. WEBSTER	CAMLEJ			C3	P	3	1	1	2	C2	710531	
HQ BTRY		1STLT R. R. HARRIS		270	3	C2	R	1	1	2	1	C1	710531	
1ST BN		MAJ B. A. MUTCH		489	11	C2	P	2	1	1	1	C1	710630	18/105 HOW TD
2D BN		MAJ J. W. ROSS		425	9	C3	P	3	1	1	1	C2	710630	18/105 HOW TD
3D BN		LTCOL D. E. COOMBE		400	6	C4	P	4	1	1	2	C3	710731	24/105 HOW TD
4TH BN		LTCOL R. W. HEESCH		278	7	C4	P	4	1	1	2	C3	710531	1/M51 VTR, 18/155 HOW SP
2D SERV BN		COL S. DAVIS	CAMLEJ	991	20	C2	P	2	1	1	2	C1	710630	
2D MT BN		LTCOL W. S. GERICHTEN		288	5	C1		1	1	1	1			
2D ENGR BN		MAJ W. W. WIDENER		645	8	C2	P	2	1	1	2	C1	710630	
2D RECON BN		MAJ C. J. GOODE, JR.		248	10	C2	P	2	1	1	2	C1	710630	
2D SP BN		LTCOL S. S. HASKINS		480	13	C2	R	1	1	2	1			
2D MED BN		LCDR S. STEVENSON (USN)		153	160	C4	P	4	2	2	2	C3	710713	
2D DENTAL CO		CAPT A. P. GIAMMISSO (USN)			64	C2	R	1	1	2	1	C1	710531	
FORTPS, FMFLANT		BGEN J. C. FEGAN	CAMLEJ	5393	145	C2	P	2	1	2	2	C2	710630	
HQCO		CAPT T. D. HOFFNER		492	2	C1		1	1	1	1			
2D FAG		COL W. W. HIXSON	CAMLEJ			C2	P	2	1	1	2			
HQ BTRY, 2D FAG		CAPT D. A. ARTHUR		160	5	C1		1	1	1	1			
2D 8" HOW BTRY		MAJ G. E. GAUMONT, JR.		171		C2	X	3	1	1	2	C2	710601	1/M51 VTR, 6/8" HOW SP
2D 175MM GUN BTRY		MAJ L. D. VOGLER		128		C4	P	4	2	2	4	C1	710531	1/M51 VTR, 6/155 GUN SP
5TH 175MM GUN BTRY		MAJ R. R. WRIGHT		147		C2	X	2	1	1	3	C1	710609	1/M51 VTR, 6/175 GUN SP
2D TANK BN (-)	25	MAJ F. M. SLORIK	CAMLEJ	681	11	C3	P	3	1	1	3	C2	710630	17/M103 TK, 104/M48 TK, 4/M51 VTR, 9/M67 TK
2D AMTRAC BN (-)	21	MAJ E. E. GERDING		770	13	C3	P	3	1	2	3	C1	710701	5/LVTE-1, 11/LVTP-5 COMD, 142/LVTP-5, 4/LVTR

* PARENTHETIC UNIT INDICATES OPCON WHEN DIFFERENT FROM ORGANIZATIONAL STRUCTURE.

TAB 21-7

Unclassified

UNCLASSIFIED

UNCLASSIFIED

MARINE CORPS COMMAND CENTER

STATUS OF FMF UNITS **

7 JULY 1971

UNIT *	NOTE	UNIT COMMANDER	LOCATION	STRENGTH USMC	STRENGTH USN	UNIT READINESS ☆ CURRENT RATE	RSN	P	S	R	T	EXPECTED RATE	BY	MAJOR EQUIPMENT
8TH COMM BN		LTCOL R. E. HAISLIP	CAMLEJ	642	10	C2	P	2	1	2	1	C2	710701	
8TH ENGR BN		LTCOL B. A. KRASMANN		783	12	C4	P	4	2	1	3	C2	710628	
8TH MT BN		LTCOL C. W. TONNACLIFF		345	4	C3	P	3	1	1	2	C2	710604	
2D RADIO BN		LTCOL J. T. BRASSFIELD		354	4	C3	P	3	1	2	2	C2	710801	
2D CIT		1STLT R. H. OSBON, JR		19		C1		1	1	1	1			
2D ANGLICO		LTCOL D. E. SCHNEIDER		320	12	C3	T	2	1	1	3	C2	710630	
2D FORCE RECON CO		MAJ B. A. GREENE		144	3	C3	T	1	1	1	3	C2	710630	
2D TOPO CO		WO J. F. MC GRORY		76	1	C3	P	3	1	1	3	C2	710601	
2D BRIDGE CO		1STLT D. C. BELL		129	1	C3	P	3	1	1	3	C2	710601	
2D HOSPITAL CO		CAPT C. LIGON (USN)		23	20	C4	P	4	1	1	4	C3	710601	
22D DENTAL CO		CAPT W. H. HAGERMAN(USN)		4	37	C4	P	4	1	1	1	C2	710601	
2D SEP SURG CO (CADRE)		LCDR G. H. ASHTON (USN)		5	10	C4	N	5	5	5	5			
9TH SEP BULK FUEL CO (CADRE)														
2D MAW		MAJGEN G. C. AXTELL	CHERPT	14282	234	C3	T	2	2	3	3	C2	710630	
MWHS-2		COL D. G. SHINFORD		662	22	C2	R	1	1	2	1	C1	710610	
12TH FORCE DENTAL CO		CAPT J. H. SMITH	CHERPT	1	64	C2	P	2	1	1	1	C1	710630	
8TH CIT		WO E. J. JOHNSTON		17		C1		1	1	1	1			
6TH SSCT		1STLT V. E. STROTE		7		C2	R	1	1	2	1	C1	711001	
MATCU-78 (FMFLANT)	*	CAPT E. P. BASHER	QUANTICO	46		C3	P	3	2	3	3	C4	710731	
MWSG-27		COL R. M. WILLIAMS	CHERPT			C3	P	3	1	2	2	C1	710801	
H&MS-27		LTCOL E. J. HEISE		742	12	C2	P	2	1	1	2	C1	710615	5/C-117D, 2/C-54S
SU 1, H&MS-27		CAPT K. D. MC CURRY		59		C1		1	1	1	1			
WERS-27		MAJ R. C. BAGLEY, JR		201		C3	X	4	1	1	2	C3	711105	
VMGR-252 (2D MAW)		LTCOL U. V. STATZER		350	1	C3	X	4	2	2	4	C3	710801	10/KC-130F
MACG-28		COL J. W. LASETER	CHERPT			C2	P	2	2	2	2	C2	710709	
H&HS-28		MAJ E. S. OLIN		265	2	C2	T	2	1	1	2	C2	710521	
MASS-1		MAJ H. F. SAEGER		160		C3	P	3	2	3	2	C3	710630	
2D REDEYE PLAT		1STLT A. W. HEATH		35		C2	P	2	1	1	2	C2	710630	
MACS-5		MAJ J.R. THROGMORTON	BEAUFORT	222		C2	P	2	2	2	2			
MACS-6		MAJ A. M. YOUNGER	CHERPT	243		C4	T	2	2	2	4	C3	710601	
3D LAAM BN		LTCOL J. C. DIXON	CHERPT	567	9	C3	P	3	2	1	2	C3	710705	
MWCS-28		MAJ L. J. MITCHELL		188		C3	R	2	1	3	2	C2	710601	
MCCRTG-20		COL T. G. ELDER				C2	X	1	2	3	2	C3	710615	
H&MS-20		LTCOL R. C. BARRETT		618	2	C2	X	2	1	1	3	C1	710707	
VMFAT-201		LTCOL R. H. SCHULTZ		382	3	C3	X	2	1	2	4	C3	710715	4/F-4B, 27/F-4J
VMAT (AW)-202		LTCOL C. G. LAWSON		314	3	C4	R	1	3	4	1	C3	710601	12/A-6A, 2/TC-4C
VMT-203		LTCOL S. M. WILLIAMS		188	3	C3	P	3	1	1	2	C4	710701	17/TA-4F, 5/TA-4J
MHTG-40		COL R. B. ENGESSER	NEW RIVER			C1		1	1	1	1			
H&MS-40		MAJ J. P. KIZER		248	1	C1		1	1	1	1			
HMHT-401		LTCOL H. D. GRESS, JR		120		C1		1	1	1	1			10/CH-53D
HMMT-402		LTCOL J. L. FELTER		163		C1		1	1	1	1			18/CH-46F
MAG-14		COL W. R. NOWADNICK	CHERPT			C3	X	3	2	2	4	C2	710801	
H&MS-14		LTCOL J. D. DUNN		655		C2	P	2	1	1	2	C2	711001	1/A-6A, 2/EA-6A, 6/F-4B, 4/TA-4F
MABS-14 (-)		MAJ C. M DOYLE		306	9	C3	P	3	1	2	1	C3	711001	
SU 1, MABS-14(-)		MAJ B. L. MEEK	BOGUE NC	213		C1		1	1	1	1			
MATCU-61		CAPT G. P HAYES		60		C2	P	2	1	1	2	C3	710615	
VMCJ-2 (-)		LTCOL J. L. GREEN	CHERPT	363	3	C3	R	1	1	3	2	C2	710630	10/EA-6A, 9/RF-4B
DET 60, VMCJ-2 (6THFLT)	*16		USS SARATOGA	143	1	C1		1	1	1	1			4/EA-6A
VMA(AW)-121		MAJ E. A. BIRZER	CHERPT	170	1	C3	P	3	1	2	3			12/A-6A
VMA(AW)-224		LTCOL B. R. STANDLEY		234	2	C3	T	1	1	2	3	C2	710530	12/A-6A
VMA(AW)-332		LTCOL P. R. JONES, JR		167	2	C3	P	3	1	1	3	C2	710531	14/A-6A
VMFA-312		MAJ R. G. KROPP		150		C4	P	4	2	4	4	C4	710701	[illegible]

* PARENTHETIC UNIT INDICATES OPCON WHEN DIFFERENT FROM ORGANIZATIONAL STRUCTURE.

TAB 21-8

Unclassified

UNCLASSIFIED

S[redacted]ASSIFIED

MARINE CORPS COMMAND CENTER

STATUS OF FMF UNITS **

7 JULY 1971

UNIT *	NOTE	UNIT COMMANDER	LOCATION	STRENGTH USMC	STRENGTH USN	UNIT READINESS ☆ CURRENT RATE	RSN	P	S	R	T	EXPECTED RATE	BY	MAJOR EQUIPMENT
DET 14, 2D MAW (NAS KEY WEST)	*		KEY WEST			C1		1	1	1	1			3/F-4B
MAG-26		COL G. R. HUNTER	NEW RIVER			C1		1	1	1	1			
H&MS-26		MAJ C. E. CANNON		596		C2	X	2	1	1	1			31/CH-46F, 17/CH-53A, 11/CH-53D
MABS-26		MAJ Z. V. LAMASCUS		453	48	C4	P	4	1	1	1	C3	710701	
MATCU-64 (MAG-26)	*	CAPT D. V. ESMOND		42		C4	P	4	1	1	4	C4	710726	
VMO-1		LTCOL R. D. MYERS		188		C4	P	4	2	2	1	C3	710616	11/OV-10A
HMA-269		LTCOL L. W. SMITH		199		C4	N	5	5	5	5	C3	710701	10/AH-1J, 6/UH-1E, 7/UH-1N
HML-167		LTCOL R. J. BLANC												
HMM-162 (32D MAU)	5	LTCOL J. W. ALBER	32D MAU	234	3	C1		1	1	1	1			12/CH-46F, 4/CH-53D, 2/UH-1E
HMM-261		MAJ D. R. ALLEN JR.	NEW RIVER	269		C2	R	1	1	2	1	C1	710601	25/CH-46F
HMM-263		LTCOL V. W. HAZELBAKER	QUANTICO											
HMM-264		MAJ R. K. GOFORTH	NEW RIVER	309		C1		1	1	1	1			24/CH-46F
HMH-362		MAJ R. F. WILEY		185		C3	R	2	1	3	1	C2	710607	13/CH-53D
HMH-461		LTCOL D. E. WEBB		208		C1		1	1	1	1			5/CH-53A, 16/CH-53D
MAG-31		COL N. B. McCRARY	BEAUFORT			C3	P	3	1	2	3	C2	710701	
H&MS-31		MAJ G. B. FERRINGTON		626		C3	P	3	1	3	3	C3	710630	1/C-117D, 2/F-4B, 4/F-4J, 3/TA-4F
MABS-31		MAJ J. L. CUNNINGHAM		328	18	C3	P	3	1	1	3	C3	710705	
MATCU-69		CAPT W. T. FARROW		42		C4	P	4	1	2	4	C4	710523	
VMFA-251		MAJ J. M. MEAD		221	1	C2	X	2	2	2	3	C3	710615	13/F-4B
VMFA-333 (CVA-66)	*3	LTCOL R. PLANT	USS AMERICA	350	3	C2	P	2	1	1	1	C1	710601	16/F-4J
VMFA-451		LTCOL R. J. WEISS	BEAUFORT	267	1	C4	T	3	1	3	4	C3	710831	13/F-4J
MAG-32		COL H. HUNTER, JR.	BEAUFORT			C3	X	3	2	4	3	C3	710608	
H&MS-32		MAJ R. L. UPCHURCH		536		C3	X	4	2	2	4	C3	710601	1/C-117D, 5/TA-4F
MABS-32		MAJ H. R. PALMATEER		468	16	C2	P	2	1	2	1	C2	710805	
MATCU-63		WO A. J. LABRIE		36		C3	X	4	1	2	2	C3	710805	
VMA-324		LTCOL G. J. ERTLMEIER		179	1	C2	X	3	1	2	2	C2	710730	20/A-4E, 6/A-4M
VMA-331		LTCOL P. E. BROOKSHIRE		191	1	C2	X	2	2	3	2	C2	710601	19/A-4E
VMA-513		LTCOL C. M. BAKER		96	2	C4	N	5	5	5	5	C3	710701	5/AV-8A
2D FSR		COL E. C. DRESBACH, JR.	CAMLEJ	2136	27	C3	X	4	1	2	3	C4	710601	
H&SBN		LTCOL J. B. CANTIENY		604	19	C3	P	3	2	2	3	C2	710801	
SUPPLY BN		LTCOL D. J. BEARD		740	8	C4	P	4	1	1	4	C4	710601	
MAINT BN		LTCOL C. L. BOOTH		792		C3	X	4	1	1	3	C4	710701	1/LVTP-5, 3/LVTR, 1/M103 TK, 1/M48 TK, 4/M51 VTR, 1/M67 TK

* PARENTHETIC UNIT INDICATES OPCON WHEN DIFFERENT FROM ORGANIZATIONAL STRUCTURE.

UNIT READINESS RATING CATEGORY

C-1 FULLY COMBAT READY
C-2 SUBSTANTIALLY COMBAT READY
C-3 MARGINALLY COMBAT READY
C-4 NOT COMBAT READY

READINESS ABBREVIATIONS

P PERSONNEL READINESS
S SUPPLIES/EQUIPMENT ON HAND
R EQUIPMENT READINESS
T TRAINING READINESS
X COMMANDERS SUBJECTIVE JUDGEMENT
N RESOURCE ALLOCATION BY COGNIZANT SERVICE DOES NOT PERMIT A HIGHER C-RATING

NOTES

1. BLT 3/4 BREAKDOWN ON TAB 34.
2. 31ST MAU BREAKDOWN ON TAB 34.
3. ABOARD USS AMERICA (CVA-66) FOR CARRIER QUALIFICATION.
4. ASSIGNED III MAF.
5. LANFOR6THFLT 1-71 (32D MAU) BREAKDOWN ON TAB 36.
6. LANFORCARIB 1-71 BREAKDOWN ON TAB 36.
7. CO A, 1ST MED BN ETA CAMPEN 18JUL71.
8. H&SCO, CO B, 1ST SP BN IN CAIRE STATUS, CO C (REIN), 1ST SP BN ENROUTE CAMPEN. ETA 13JUL71.
9. GTMO BN (REIN) BREAKDOWN ON TAB 31.
10. TRUCK CO, 1ST SERV BN (CAIRE).
11. CO C, 7TH ENGR BN (CAIRE). CO A, 7TH ENGR BN ENROUTE CAMPEN.
12. THIS UNIT IS BOTH AUCON/OPCON TO WERS-17 (-).
13. AIR ALERT BATTALION.
14. PERSONNEL AND EQUIPMENT CARRIED IN HQBN, 1ST MARDIV.
15. VIEQUES TRNG (DET, H&SCO, CO A, 1/2).
16. ABOARD USS SARATOGA (CVA-60).
17. INCLUDES STRENGTH CO D, 7TH ENGR BN AND 1ST PLAT, 1ST BRIDGE CO.
18. H&SCO, CO B, CO C, AND CO D, 1ST TANK BN (CAIRE).
19. H&SCO, CO B AND CO C, 3D AMTRAC BN (CAIRE).
20. PERSONNEL AND EQUIPMENT CARRIED IN HQBN, 2D MARDIV.
21. ONE PLATOON IS DEPLOYED WITH LANFOR6THFLT 1-71 AND ALSO ONE PLATOON WITH LANFORCARIB 1-71.
22. PERSONNEL AND EQUIPMENT CARRIED IN HQBN, 3D MARDIV.
23. STRENGTH INCLUDES DET, H&SCO, AND CO A, 1ST MT BN ENROUTE CAMPEN. ETA 13JUL71.
24. SANGLEY AUGMENTATION FORCE (DET, 4TH MARINES w/1 OFF AND 121 ENL) AT SANGLEY PT., R.P.I.
25. ONE PLATOON IS DEPLOYED WITH LANFOR6THFLT 1-71, ONE PLATOON WITH LANFORCARIB 1-71 AND ONE PLATOON WITH THE GTMO BN.
26. STRENGTH INCLUDES DET, H&SCO, DET, ENGR SPT CO, AND CO A, 1ST ENGR BN ENROUTE CAMPEN ETA 13JUL71.
27. THIS UNIT IS BOTH AUCON/OPCON TO MAG-12, HOWEVER, IS PHYSICALLY LOCATED ON OKINAWA WITH THEIR STRENGTH CARRIED UNDER OKINAWA.

UNCLASSIFIED

** SOURCE: MARES FORSTAT REPORT DATED 17 MAY 1971. ADJUSTED BY REDEPLOYMENT INCREMENT VII AS OF 7JUL71.

TAB 21-9

Unclassified [redacted]

UNCLASSIFIED

MARINE CORPS COMMAND CENTER

RECAPITULATION OF FMF ACTUAL STRENGTHS*

PACIFIC

7 JULY 1971

UNIT	GROUND		AIR		GRAND TOTAL	
	USMC	USN	USMC	USN	USMC	USN
FMFPAC						
MIDPAC						
HQ, FMFPAC	883	36	67		950	36
1ST MAR BDE	1,981	95	1,901	23	3,882	118
OTHER	786	15			786	15
TOTAL MIDPAC	3,650	146	1,968	23	5,618	169
WESTPAC						
III MAF (OKINAWA)						
HQ, III MAF	142				142	
3D MARDIV (-)(REIN)	14,622	674			14,622	674
1ST MAW			2,901	24	2,901	24
3D FSR	3,296	50			3,296	50
TOTAL III MAF (OKINAWA)	18,060	724	2,901	24	20,961	748
III MAF (JAPAN)						
1ST MAW			6,023	109	6,023	109
TOTAL III MAF (JAPAN)			6,023	109	6,023	109
LANFOR 7TH FLT						
31ST MAU	1,468	60	291	4	1,759	64
BLT 3/4	1,352	66	17		1,369	66
(1) **TOTAL LANFOR 7TH FLT**	2,820	126	308	4	3,128	130
TOTAL III MAF	18,060	724	8,924	133	26,984	857
TOTAL WESTPAC	18,060	724	8,924	133	26,984	857
EASTPAC						
HQ, I MAF	22				22	
1ST MARDIV (-)(REIN)	11,381	567			11,381	567
FORTRPS, FMFPAC	1,416	69			1,416	69
3D MAW			9,899	196	9,899	196
1ST FSR	1,150	42			1,150	42
TOTAL EASTPAC	13,969	678	9,899	196	23,868	874
TOTAL FMFPAC	35,679	1,548	20,791	352	56,470	1,900

ATLANTIC

EAST COAST						
FMFLANT						
HQ, FMFLANT	726	4	79		805	4
2D MARDIV	15,659	561			15,659	561
FORTRPS, FMFLANT	5,393	145			5,393	145
2D MAW			14,282	234	14,282	234
2D FSR	2,136	27			2,136	27
TOTAL EAST COAST	23,914	737	14,361	234	38,275	971
CARIBBEAN						
GTMO BN (REIN)	1,001	26			1,001	26
LANFORCARIB 1-71	1,237	48			1,237	48
(2) **TOTAL CARIBBEAN**	2,238	74			2,238	74
MEDITERRANEAN						
LANFOR6THFLT 1-71	1,512	58	264	3	1,776	61
(32 MAU)			143	1	143	1
(2) **TOTAL MEDITERRANEAN**	1,512	58	407	4	1,919	62
TOTAL FMFLANT	23,914	737	14,361	234	38,275	971
TOTAL FMF	59,593	2,285	35,152	586	94,745	2,871

NOTES
(1) STRENGTH INCLUDED IN III MAF OKINAWA.
(2) STRENGTH INCLUDED IN EAST COAST.

* SOURCE: MARES FORSTAT REPORT DATED 17MAY71. ADJUSTED BY REDEPLOYMENT INCREMENT VII AS OF 7JUL71.

TAB 22

Unclassified

UNCLASSIFIED

UNCLASSIFIED [redacted]

MARINE CORPS COMMAND CENTER

DISTRIBUTION OF MAJOR GROUND EQUIPMENT AND AIRCRAFT

GROUND EQUIPMENT

7 JULY 1971

EQUIPMENT		NOTE	TOTAL EQUIP		JAPAN	OKI	7TH FLT MAU's	MIDPAC	EAST PAC	CAM LEJ	GTMO	6TH FLT MAU's	CARIB	OTHER
81MM MORTAR	M29	4	236		8	25	8	16	99	64	8	8		
106MM RR	M40A1C	4	218		8	25	8	16	81	64	8	8		
107MM	M30		6						6					
105MM HOW TD	M101A		170			54	6	18	32	54		6		
155MM HOW TD	M114A1		7			3			4					
155MM HOW SP	M109		59			18			23	18				
155MM GUN SP	M53		6							6				
175MM GUN SP			18						12	6				
8" HOW SP	M110		21			3			12	6				
90MM GUN TANK	M48		140			43	5		38	42	7	5		
120MM GUN TANK	M-103		33						15	13	5			
FLAME TANK	M-67		25			8			7	8	2			
VTR	M-51		29			7			9	13				
LVTR	M-51		14			3		1	3	7				
LVTP-5 COMD			42			9	1	3	18	10		1		
LVTP-5			354			89	10	44	69	132		10		
LVTE-1			18			7			5	6				

AIRCRAFT

AIRCRAFT	NOTE	TOTAL A/C		JAPAN	OKI	7TH FLT MAU's	MID PAC	EAST PAC	CH PT BEAU	NEW RIVER	6TH FLT MAU's	CARIB	OTHER
FIXED WING													
C-117D		18		4			1	6	7				
KC-130F		25			5			10	10				
C-54P/Q/R/S		7		3				2	2				
TA-4F		64		12			2	21	29				
TA-4J		7						2	5				
TC-4C		2							2				
T-28B		5					5						
AV-8A		5							5				
A-6A		75		11				13	51				
EA-6A	1	24		6				2	12				4
RF-4B		30		11				10	9				
F-4B	3	126		15			8	68	32				3
F-4J	5	105		12			33		44				16
A-4E		105		42				24	39				
A-4F		26						26					
A-4M		6							6				
OV-10A		51			14		6	20		11			
US-2B		2					2						
HELICOPTERS													
UH-1E		78		10	24	4	8	24		6	2		
UH-1N		7								7			
AH-1G		21		21									
AH-1J		14			4					10			
CH-46A		5					5						
CH-46D		101			30	14	30	27					
CH-46F		147						37		98	12		
CH-53A		77						55		22			
CH-53D		91			15	4	15	3		50	4		
VH-34D	2	3					3						

NOTES:
1. DET, VMCJ-2 ABOARD USS SARATOGA (CVA-60) IN "OTHER" (4/EA-6A ASSIGNED). AFLOAT MED.
2. TWO UH-34D AND ONE VH-34D AT KANEOHE, HAWAII.
3. AT KEY WEST IN "OTHER".
4. AT FUJI TRNG AREA (BLT 3/9). ETR OKINAWA IS 9JUL71.
5. ABOARD USS AMERICA (CVA-66) (VMFA-333) (16/F-4J) IN "OTHER". ENROUTE MED. ETA 15JUL71.

Unclassified

UNCLASSIFIED

TAB 23

[redacted]

UNCLASSIFIED
[redacted]

MARINE CORPS COMMAND CENTER

FLEET MARINE FORCE DISPOSITION

7 JULY 1971

(7) 7TH MAB
HQ, 7TH MAB
7TH MARINES
PROV MAG-50
AT CAMPEN

(8) CHINA LAKE TRNG
DET VMA-331
(6/A-4E A/C)
(3-10JUL71)

(9) 8TH MAB
HQ, 8TH MAB
34TH MAU
PROV MAG-40
AT CAMLEJ

VMFA 333 ABOARD
USS AMERICA (CVA-66)
ENROUTE MED
ETA 15JUL71

LANFOR6THFLT 1-71
32D MAU
BLT 3/2
HMM-162
ENROUTE NAVPLION, GREECE
ETA 8JUL71

SANGLEY AUGMENTATION FORCE
DET, 4TH MARINES
AT SANGLEY POINT, R.P.I.

I MAF
1ST MARDIV (-) (REIN)
FORTRPS, FMFPAC
3D MAW

HQ, FMFPAC
1ST MARBDE
3D MAR (-) (REIN)
MAG-24

HQ, FMFLANT
2D MARDIV (-) (REIN)
FORTRPS, FMFLANT
2D MAW

PENSACOLA TRNG
DET A, VMA(AW)-224
(10/A-6A A/C)
(3-10JUL71)

GTMO BN (REIN)
2D BN, 8TH MAR
BTRY B, 1/10
2 PLATS, 2D TANK BN
DET, FSR

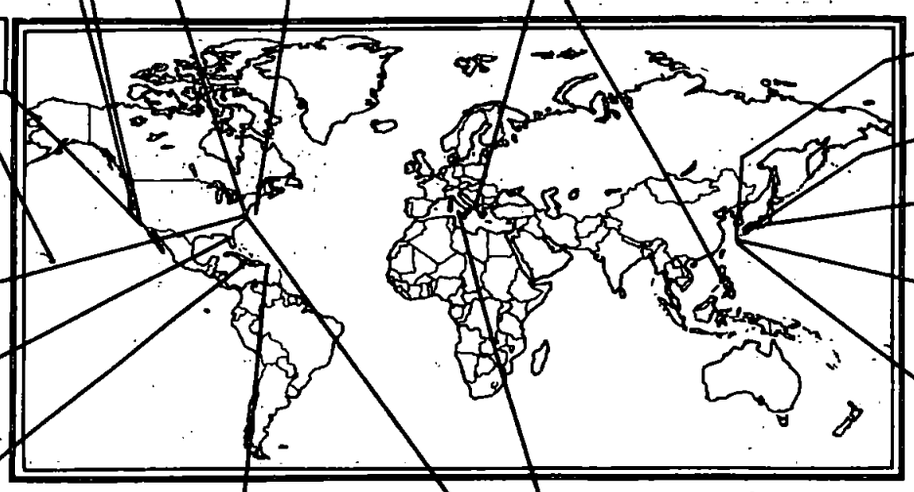

OKINAWA
III MAF
3D MARDIV (-) (REIN)
MAG-36

JAPAN
1ST MAW

FUJI TRAINING
BLT 3/9
ENROUTE OKINAWA
ETA 9JUL71

BLT 3/4
AT OKINAWA STANDING
DOWN UNTIL 16AUG71

LANFOR7THFLT
31ST MAU
BLT 2/9
HMM-164
AT SUBIC BAY

VIEQUES TRAINING
DET, H&SCO, 1/2
CO A, 1/2
AT CAMP GARCIA, P.R.

(4) DET 60, VMCJ-2 (4/EA-6A A/C)
ABOARD USS SARATOGA (CVA-60)
AFLOAT TYRRHENIAN/IONIAN SEAS

LANFORCARIB 1-71
BLT 1/6
AT CAMLEJ ETD 8JUL71

DISTRIBUTION BY BATTALION/SQUADRON

	INF BNS	VMFA	VMA	VMA(AW)	VMCJ	HMM	HMH	*HML	VMO	VMGR
WESTPAC	6	2	2	1	1	2	1	1	1	1
OKINAWA	(3)					(1)	(1)	(1)	(1)	(1)
JAPAN	(1)	(2)	(2)	(1)	(1)					
LANDING FORCE	(2)					(1)				
MIDPAC	2	3				1	1			
HAWAII	(2)	(3)				(1)	(1)			
EASTPAC	10	4	2	2	1	2	2	1	1	1
EL TORO/SANTA ANA		(4)	(2)	(2)	(1)	(2)	(2)			(1)
CAMPEN	(10)							(1)	(1)	
ATLANTIC	8	4	3	3	1	3	2	*2	1	1
CAMP LEJEUNE	(6)									
CHERRY POINT		(1)		(3)	(1)					(1)
BEAUFORT		(3)	(3)							
NEW RIVER						(2)	(2)	*(2)	(1)	
QUANTICO						(1)				
CARIB	(2)									
EUROPE	1					1				
MEDITERRANEAN	(1)					(1)				
GRAND TOTAL	27	13	7	6	3	9	6	4	3	3

*HMA-269, MAG-26 AT NEW RIVER, N. C.

Unclassified

UNCLASSIFIED
[redacted]

TAB 31-1

UNCLASSIFIED
C[redacted]

MARINE CORPS COMMAND CENTER

7 JULY 1971

FLEET MARINE FORCE MOVEMENTS

	UNIT	ETD/ATD	FROM	DESTINATION	ETA/ATA
	MOVEMENTS 1 - 7 JULY 1971				
(1)	H&MS-11	6-10JUN71	DANANG, RVN	EL TORO, CALIFORNIA	25JUN-
(1)	MABS-11	6-10JUN71	DANANG, RVN	EL TORO, CALIFORNIA	2JUL71
(1)	CO A, 1ST ENGR BN	22JUN71	DANANG, RVN	CAMP PENDLETON, CALIFORNIA	9JUL71
(1)	CO A, 1ST MT BN	22JUN71	DANANG, RVN	CAMP PENDLETON, CALIFORNIA	9JUL71
(1)	CO C, 1ST SP BN	22JUN71	DANANG, RVN	CAMP PENDLETON, CALIFORNIA	9JUL71
(1)	H&MS-16 (-)	20JUN71	DANANG, RVN	SANTA ANA, CALIFORNIA	17JUL71
(1)	MABS-16	20JUN71	DANANG, RVN	SANTA ANA, CALIFORNIA	17JUL71
(1)	CO A (REIN), 7TH ENGR BN	22JUN71	DANANG, RVN	29 PALMS, CALIFORNIA	18JUL71
(1)	COMM SPT CO (-), 7TH COMM BN	24JUN71	DANANG, RVN	KANEOHE, HAWAII	12JUL71
(1)	CO A, 1ST MED BN	22JUN71	DANANG, RVN	CAMP PENDELTON, CALIFORNIA	18JUL71
(1)	DET, 5TH COMM BN	22JUN71	DANANG, RVN	CAMP PENDLETON, CALIFORNIA	18JUL71
(1)	1ST MP BN	23JUN71	DANANG, RVN	CAMP PENDLETON, CALIFORNIA	9JUL71
(1)	5TH CIT	22JUN71	DANANG, RVN	CAMP LEJEUNE, NORTH CAROLINA	18JUL71
	FLC (-)	24JUN71	DANANG, RVN	CAMP PENDLETON, CALIFORNIA	19JUL71
	DET 59, VMCJ-2	26JUN71	ROTA, SPAIN	NORFOLK, VIRGINIA	2JUL71
	MACS-9	30JUN71	2D MAW	DEACTIVATED	
	MWHG-1	1JUL71	1ST MAW	DEACTIVATED	
	MWFS-1	1JUL71	1ST MAW	DEACTIVATED	
	MWHG-2	1JUL71	2D MAW	DEACTIVATED	
	MWFS-2	1JUL71	2D MAW	DEACTIVATED	
	MWHG-3	1JUL71	3D MAW	DEACTIVATED	
	MWFS-3	1JUL71	3D MAW	DEACTIVATED	
	MWHG-4	1JUL71	4TH MAW (USMCR)	DEACTIVATED	
	MWFS-4	1JUL71	4TH MAW (USMCR)	DEACTIVATED	
(3)	VMFA-333	6JUL71	NORFOLK, VIRGINIA	MEDITERRANEAN	15JUL71
	SCAMP, 2D MARDIV	1JUL71	2D MARDIV	ACTIVATED	
	SU 2, H&MS-36	1JUL71	1ST MAW	ACTIVATED	
	3D BN, 9TH MAR	6JUL71	FUJI, JAPAN	OKINAWA	9JUL71
(7)	7TH MAB	1JUL71	I MAF	ACTIVATED	
(5)	5TH MAB	1JUL71	1ST MARDIV	DEACTIVATED	
(4)	DET 60, VMCJ-2	25JUN71	CANNES, FRANCE	OPS TYRRHENIAN SEA	6JUL71
(6)	LANFOR7TH FLT (31ST MAU)	1JUL71	AFLOAT OKINAWA AREA	ARGOPS SOUTH CHINA SEA	2JUL71
		6JUL71	ARGOPS SOUTH CHINA SEA	SUBIC BAY, R.P.I.	7JUL71
(2)	LANFOR6THFLT 1-71 (32D MAU)	7JUL71	BARI, ITALY	NAVPLION, GREECE	8JUL71
(8)	DET VMA-331	2JUL71	BEAUFORT, SOUTH CAROLINA	CHINA LAKE, CALIFORNIA	3JUL71
	PROJECTED MOVEMENTS 8 - 14 JULY 1971				
	3D RECON BN (-)	10JUL71	OKINAWA	FUJI, JAPAN	UNKNOWN
	3D TANK BN (-)	10JUL71	OKINAWA	FUJI, JAPAN	UNKNOWN
	4TH MAR, 12TH MAR (-)	10JUL71	OKINAWA	FUJI, JAPAN	UNKNOWN
	LANFORCARIB 1-71 (BLT 1/6)	8JUL71	CAMP LEJEUNE, NORTH CAROLINA	GUANTANAMO BAY, CUBA	14JUL71
	DET 60, VMCJ-2	8JUL71	OPS TYRRHENIAN SEA	OPS IONIAN SEA	9JUL71
		12JUL71	OPS IONIAN SEA	VALLETTA, MALTA	13JUL71
(8)	DET, VMA-331	10JUL71	CHINA LAKE, CALIFORNIA	FALLON, NEVADA	10JUL71
(8)	DET VMA-324	10JUL71	BEAUFORT, SOUTH CAROLINA	CHINA LAKE, CALIFORNIA	10JUL71

REDESIGNATIONS

FROM	DATE	TO	LOCATION
H&HS-1	1JUL71	MWHS-1	IWAKUNI, JAPAN
MWCS-1	1JUL71	MWCS-18	IWAKUNI, JAPAN
H&HS-2	1JUL71	MWHS-2	CHERRY POINT, NORTH CAROLINA
MWCS-2	1JUL71	MWCS-28	CHERRY POINT, NORTH CAROLINA
H&HS-3	1JUL71	MWHS-3	EL TORO, CALIFORNIA
MWCS-3	1JUL71	MWCS-38	EL TORO, CALIFORNIA
H&HS-4 (USMCR)	1JUL71	MWHS-4	DETROIT, MICHIGAN
MWCS-4 (USMCR)	1JUL71	MWCS-48	CHICAGO, ILLINOIS

NOTE

(1) PASSAGE OF COMMAND:

UNIT	FROM	TO	DATE
H&MS-11	3D MAB	3D MAW	1JUN71
MABS-11	3D MAB	3D MAW	9JUN71
MABS-16 (-)	3D MAB	3D MAW	3JUN71
CO A (REIN), 7TH ENGR BN	3D MAB	FORTRPS, FMFPAC	10JUN71
1ST MP BN	3D MAB	1ST MARDIV	16JUN71
H&MS-16	3D MAB	3D MAW	20JUN71
5TH CIT	3D MAB	FMFLANT	22JUN71
CO A, 1ST ENGR BN	3D MAB	1ST MARDIV	22JUN71
CO A, 1ST MED BN	3D MAB	1ST MARDIV	22JUN71
CO C, 1ST SP BN	3D MAB	1ST MARDIV	22JUN71
CO A, 1ST MT BN	3D MAB	1ST MARDIV	22JUN71
DET, 5TH COMM BN	3D MAB	1ST MARDIV	22JUN71
COMM SPT CO (-), 7TH COMM BN	3D MAB	1ST MARBDE	26JUN71

(2) DEPARTED BARI, ITALY ON 7JUL71 ENROUTE TO NAVPLION, GREECE TO PARTICIPATE IN PHIBLEX 1-72 DURING THE PERIOD 9-21JUL71. PHIBLEX 1-72 IS A FULL SCALE SUPPORTED AMPHIBIOUS LANDING TO EXERCISE SIXTHFLT IN ALL FACETS OF SUPPORTED AMPHIBIOUS OPERATIONS.

(3) ENROUTE MEDITERRANEAN (6-15JUL71).

(4) THE USS SARATOGA (CVA-60) IS SCHEDULED TO DEPART CANNES, FRANCE FOR OPERATIONS IN THE TYRRHENIAN/IONIAN SEAS (6-12JUL71). PORT VISIT VALLETTA, MALTA (13-21JUL71).

(5) 5TH MAB DEACTIVATED ON 1JUL71.

(6) UPKEEP AT SUBIC BAY, R.P.I. (7-15JUL71).

(7) CG, I MEF ACTIVATED THE 7TH MAB (HQ, 7TH MAB, 7TH MARINES AND PROV MAG-50) FOR PLANNING ON 1JUL71 FOR PARTICIPATION IN ROPEVAL 3-71. A MAB SIZE AMPHIBIOUS EXERCISE TO BE CONDUCTED IN THE CAMP PENDLETON/CLEVELAND NATIONAL FOREST AREAS DURING THE PERIOD 8-17SEP71. LANDING FORCE OPERATIONS WILL BE DESIGNED TO TRAIN FORCES IN THE PLANNING AND EXECUTION OF AMPHIBIOUS OPERATIONS INVOLVING THE TECHNIQUE OF STAND-OFF AMPHIBIOUS ASSAULT AND ASPECTS OF THE SEA-BASING CONCEPT. BGEN P. G. GRAHAM, CG FORTRPS, FMFPAC IS DESIGNATED AS CG, 7TH MAB.

(8) DET VMA-331 AT CHINA LAKE, CALIFORNIA FOR TRAINING (3-10JUL71) AND IS SCHEDULED FOR FURTHER TRAINING AT FALLON, NEVADA (11-17JUL71). ETR BEAUFORT, SOUTH CAROLINA IS 18JUL71. DET VMA324 IS SCHEDULED FOR TRAINING AT CHINA LAKE, CALIFORNIA FROM 10-23JUL71.

(9) CG, FMFLANT ACTIVATED THE 8TH MAB (HQ, 8TH MAB, 34TH MAU AND PROV MAG-40) FOR PLANNING AND PARTICIPATION IN EXERCISE DEEP FURROW-71. EXERCISE DEEP FURROW-71 IS A JOINT AND COMBINED NATO EXERCISE TO BE CONDUCTED DURING THE PERIOD 9-20OCT71 TO INCLUDE AMPHIBIOUS LANDINGS IN TURKISH THRACE BY A COMBINED U.S. AND UNITED KINGDOM/ITALIAN LANDING FORCE. BGEN T. H. MILLER, JR., AWC 2D MAW, IS DESIGNATED AS CG, 8TH MAB

Unclassified

TAB 31-2

UNCLASSIFIED [redacted]

UNCL[redacted]IED

MARINE CORPS COMMAND CENTER

FMF PACIFIC UNIT LOCATIONS AND STRENGTHS AND OSD CEILING CONSIDERATIONS (WESTPAC)

7 JULY 1971

RVN

	USMC	USN
OSD PROGRAM XIII SPACE AUTHORIZATION	637	
SUB UNIT 1, 1ST ANGLICO	182	10
MACV STAFF/MACV FIELD	185	
NAVADVGRU/MACV UNITS	28	
OTHERS	152	
TOTAL RVN STRENGTH AS OF 1JUL71.	547	10

OKINAWA

III MAF (TF-79)

HQ, III MAF

3D MARDIV (-) (REIN) (TF-79.2)

HQ, 3D MARDIV (-)(REIN)
- 4TH MARINES
  - 1/4
  - 2/4
  - 3/4 (BLT)
- 9TH MARINES
  - 1/9
  - 2/9 (31ST MAU)
  - 3/9

1ST MAW

MAG-36

VMGR-152	(KC-130F)
VMO-6 (-)	(OV-10A/UH-1E)
HMH-462	(CH-53D)
HMM-164	(CH-46D/CH-53D/UH-1E)(31ST MAU)
HMM-165	(CH-46D)
HML-367	(UH-1E)

3D FSR

		USMC	USN
	OSD PROGRAM XIII SPACE AUTHORIZATION	19,249	934
	OKINAWA STRENGTH RECAPITULATION		
	III MAF		
	HQ, III MAF	142	1
(3)	3D MARDIV (-)(REIN)	13,145	674
	1ST MAW ELEMENTS	2,605	22
	3D FSR	3,296	50
(1)	III MAF TOTAL	19,188	747
	OTHERS		
	MCB CAMP BUTLER/NON FMF	1,301	25
	NON-DEPLOYABLE CASUALS	5	
	SVN ORIGINATED PATIENTS	4	
	OTHER TOTAL	1,310	25
	GRAND TOTAL OKINAWA STRENGTH AS OF 24JUN71.	20,498	772

JAPAN

1ST MAW (TF-79.3)

HQ, 1ST MAW
- MAG-12
  - VMA-211 (A-4E)
  - VMA-311 (A-4E)
  - VMA(AW)-533 (A-6A)
  - VMCJ-1 (EA-6A/RF-4B)
- MAG-15
  - VMFA-115 (F-4B)
  - VMFA-232 (F-4J)

		USMC	USN
	OSD PROGRAM XIII SPACE AUTHORIZATION	7,000	
	JAPAN STRENGTH RECAPITULATION		
	HQ, 1ST MAW	1,178	58
	1ST MAW	4,775	51
(2)	NON-FMF	1,062	
	GRAND TOTAL JAPAN STRENGTH AS OF 24JUN71.	7,015	109

NOTES
(1) LESS ONE MAU.
(2) INCLUDES MCAS, IWAKUNI, MB YOKOSUKA, MB SASEBO, AND CO "E", MAR SPT BN.
(3) SANGLEY AUGMENTATION FORCE (DET, 4TH MARINES) CONSISTING OF 1 OFF AND 121 ENL INCLUDED IN 3D MARDIV (-) (REIN) STRENGTH.

SOURCES: RVN STRENGTH: COMUSMACV WEEKLY STRENGTH REPORT MSG 030733ZJUL71.

OKI/JAPAN STRENGTH: FMFPAC WESTPAC STRENGTH VERIFICATION MSG 300201ZJUN71.

Unclassified

UNCLASSIFIED

TAB 33

[redacted]

CO[redacted]

UNCLASSIFIED

MARINE CORPS COMMAND CENTER

LANDING FORCES-7th FLEET

31st MAU*

7 JULY 1971

UNITS EMBARKED TASK GROUP 79.4	STRENGTH USMC OFF	STRENGTH USMC ENL	STRENGTH USN OFF	STRENGTH USN ENL
31ST MAU HQ DET	9	13		
COL E. F. ROTH, JR.				
BLT 2/9				
(LTCOL F. J. JOHNSON, JR.)				
2D BN, 9TH MARINES	36	1051	2	29
E/2/12TH MARINES	4	89		2
PLT, CO C, 3D RECON BN	1	23		2
PLT, CO B, 1ST AMTRAC BN	1	44		1
PLT, CO C, 3D SP BN	1	38		2
PLT, CO A, 3D MT BN	1	21		
PLT, CO A, 3D TANK BN	1	26		1
PLT, CO A, 3D ENGR BN	1	37		1
PLT, CO B, 3D MED BN		5	1	16
DET, HQBN, 3D MARDIV	1	7		
LOGISTIC SUPPORT UNIT				
DET, 3D SERV BN	1	31		1
DET, 3D FSR	1	25		
DET, 3D DENTAL CO			1	1
HMM-164	51	238	1	3
(LTCOL A. J. KETTERING)				
DET, HMH-462				
DET, VMO-6	2			
TOTALS	111	1648	5	59

SHIPPING

USS NEW ORLEANS (LPH-11)
USS VANCOUVER (LPD-2)
USS WEXFORD COUNTY (LST-1168)
USS THOMASTON (LSD-28)

AIRCRAFT

13/CH-46D
4/CH-53D
4/UH-1E

ARMS & EQUIPMENT

1 LVTP-5 CMD
10 LVTP-5
5 M48 TANKS
6 105 HOW TD
8 106MM RR
8 81MM MORTAR
36 TRUCK, UTILITY PLATFORM W/O 106 RR, M-274
40 TRUCK, UTILITY, M-151 & M-715
1 TRUCK, UTILITY MRC-83
2 TRUCK, UTILITY MRC-123
4 TRUCK, UTILITY MRC-109
1 TRUCK, UTILITY, MRC-124
1 TRUCK, UTILITY MRC-135
1 TRUCK, AMBULANCE M-718
1 TRUCK, CARGO 5T M-54
2 TRUCK, TANK M-49
2 TRUCK, DUMP 5T M-51
5 TRUCK, CARGO 3/4T M-37
35 TRUCK, CARGO 2½T M-35
1 TRUCK, WRECKER 5T M-543
36 TRAILER, CARGO M-416
17 TRAILER, CARGO M-105
6 TRAILER, TANK WATER M-149
2 TRAILER, CARGO M-101
2 KW LIGHT UNIT
4 TRACTOR TD-15 & TD-25
3 CRANE M-60 & M-62
1 HYPOCHLORINATION UNIT
2 TRUCK, M-43
2 ROUGH TERRAIN FORK LIFT (6000 LBS)
1 STEAM CLEANER
1 WATER PURIFICATION UNIT
1 BATH UNIT
2 GENERATOR PU 708/G & PU 692/G
4 GENERATOR PU-667 & FU 669
51 M60 MG
18 M60 MG HELO MOUNTED
39 50 CAL. HELO MOUNTED
6 60MM MORTAR
24 3.5 ROCKET LAUNCHER
8 FLAME THROWERS
10 50 CAL. MG

BLT 3/4*

2 JUNE 1971

UNITS EMBARKED TASK GROUP 79.5	STRENGTH USMC OFF	STRENGTH USMC ENL	STRENGTH USN OFF	STRENGTH USN ENL
BLT 3/4				
(LTCOL A. J. CASTELLANA)				
3D BN. 4TH MARINES	46	935	2	36
BTRY "I", (REIN), 3D BN, 12TH MAR	8	119	1	2
PLT, CO C, 3D RECON BN	1	20		
PLT, CO C, 1ST AMTRAC BN	1	39		1
PLT, CO C, 3D TANK BN	1	27		1
PLT, CO A, 9TH MT BN	1	22		
PLT, CO C, 3D ENGR BN	1	39		1
PLT, CO C, 3D SP BN	1	45		2
PLT, CO D, 3D MED BN		5	1	17
DET, 3D DENT CO			1	1
DET, HQBN, 3D MARDIV	1	4		
DET "F" BMU, NBG				
LOGISTIC SUPPORT UNIT	1	38		
DET, 3D SERV BN				
DET, 3D FSR				
DET, VMO-6	4	13		
TOTALS	66	1303	5	61

SHIPPING

USS JUNEAU (LPD-10)
USS ST. LOUIS (LKA-116)
USS ALAMO (LSD-33)
USS WHITFIELD CTY (LST-1169)

AIRCRAFT

2/UH-1E

ARMS & EQUIPMENT

1 LVTP-5 CMD
10 LVTP-5
5 M48 TANKS
6 105 HOW TD
8 106MM RR
8 81MM MORTAR
33 TRUCK, UTILITY PLATFORM W/O 106 RR, M-274
30 TRUCK, UTILITY , M-151
4 TRUCK, VAN MRC-109
2 TRUCK, UTILITY M-123
2 TRUCK, UTILITY M-124
1 TRUCK, AMBULANCE M-718
2 TRUCK, AMBULANCE M-43
16 TRUCK, CARGO 2½T M-35
4 TRUCK, CARGO 3/4T M-37
2 TRUCK, TANK M-49
2 TRUCK, DUMP 5T M-51
14 TRUCK, CARGO 5T M-54
1 TRUCK, WRECKER 5T M-543
4 TRAILER, CARGO M-101
6 TRAILER, CARGO 3/4T M-101A1
15 TRAILER, CARGO M-105
4 TRAILER, TANK WATER M-149
27 TRAILER, CARGO M-416
1 30 KW GENERATOR
1 GENERATOR SET PU-720G
1 GENERATOR SET TRAILER MOUNTED PU-692G
1 BATH UNIT
1 WATER PURIFICATION UNIT
2 CONEX BOX
1 STEAM CLEANER

UNCLASSIFIED

Unclassified

* SEE TAB 31 FOR PRESENT LOCATION

TAB 34

[redacted]

UNCLASSIFIED

MARINE CORPS COMMAND CENTER

FMF ATLANTIC UNIT LOCATIONS AND STRENGTHS*

7 JULY 1971

EAST COAST

FMFLANT

HQ, FMFLANT (NORFOLK)

2D MARDIV

HQ, 2D MARDIV (CAMLEJ)

2D MARINES
- 1/2
- 2/2
- 3/2 (LANFOR6THFLT 1-71)(32D MAU)

6TH MARINES
- 1/6 (LANFORCARIB 1-71)
- 2/6
- 3/6

8TH MARINES
- 1/8
- 2/8 (GTMO BN (REIN)
- 3/8

FORTRPS FMFLANT

HQ, FORTRPS (CAMLEJ)

2D MAW

HQ, 2D MAW (CHERRY POINT)

MAG-14 (CHERRY POINT)
- VMCJ-2 (RF-4F/EA-6A)
- VMA(AW)-224 (A-6A)
- VMA(AW)-121 (A-6A)
- VMA(AW)-332 (A-6A)
- VMFA-312 (F-4B)

MWSG-27 (CHERRY POINT)
- VMGR-252 (KC-130F)

MCCRTG-20 (CHERRY POINT)
- VMFAT-201 (F-4B/J)
- VMAT(AW)-202 (A-6A/TC-4C)
- VMT-203 (TA-4F/J)

MAG-31 (BEAUFORT)
- VMFA-251 (F-4B)
- VMFA-333 (F-4J)
- VMFA-451 (F-4J)

MAG-32 (BEAUFORT)
- VMA-331 (A-4E)
- VMA-324 (A-4E/M)
- VMA-513 (AV-8A)(CADRE)

MAG-26 (NEW RIVER)
- VMO-1 (OV-10A)
- HML-167
- HMM-162 (CH-46F/CH-53D/UH-1E)(LANFOR6THFLT 1-71)(32D MAU)
- HMM-261 (CH-46F)
- HMM-264 (CH-46F)
- HMM-263 (QUANTICO)
- HMH-461 (CH-53A/D)
- HMH-362 (CH-53D)
- HMA-269 (UH-1E/N/AH-1J)

MHTG-40 (NEW RIVER)
- HMHT-401 (CH-53D)
- HMMT-402 (CH-46F)

2D FSR

FMFLANT STRENGTH RECAPITULATION	USMC	USN
HQ, FMFLANT	805	4
2D MARDIV	15,659	561
FORTRPS	5,393	145
2D MAW	14,282	234
2D FSR	2,136	27
GRAND TOTAL FMFLANT	38,275	971

* SOURCE: MARES FORSTAT REPORT DATED 17MAY71.

TAB 35

UNCLASSIFIED

Unclassified

UNCLASSIFIED
CO[redacted]

MARINE CORPS COMMAND CENTER

CHRONOLOGY OF SIGNIFICANT EVENTS

7 JULY 1971

DATES	LOCATION	UNITS	REMARKS
15JUN71	FUTEMA, OKINAWA	MACS-8, MACG-18, 1ST MAW	MACS-8 DEACTIVATED 150530ZJUN71.
26JUN71	DANANG, RVN	FLC	FLC DEACTIVATED 260900ZJUN71.
27JUN71	DANANG, RVN	3D MAB	AT 270400ZJUN71 HQ 3D MAB WAS DEACTIVATED AND MAJGEN A. J. ARMSTRONG, CG 3D MAB, DEPARTED DANANG ENROUTE TO HQ FMFPAC, HAWAII. WITH THE DEACTIVATION OF HQ 3D MAB, ALL 13593 OSD SPACES SCHEDULED FOR REDEPLOYMENT/DEACTIVATION DURING INCREMENT VII (KEYSTONE ORIOLE (ALPHA)) HAVE EITHER REDEPLOYED FROM RVN OR HAVE BEEN DEACTIVATED, LEAVING A TRANSITIONAL SUPPORT FORCE OF 637 PROGRAM XIII OSD SPACES.
30JUN71	ATSUGI, JAPAN SANGLEY PT., R.P.I.	MB, ATSUGI MB, SANGLEY PT.	MB, ATSUGI, JAPAN, DEACTIVATED 30 JUNE 1971. MB, SANGLEY PT., R.P.I. DEACTIVATED 30 JUNE 1971
30JUN71	29 PALMS, CALIF.	CO A (REIN) & DET, HQCO, 11TH ENGR BN, FORTRPS FMFPAC	CO A (REIN) AND DET, HQCO, 11TH ENGR BN DEACTIVATED 301600ZJUN71.
30JUN71	BEAUFORT, S.C.	MACS-9, MACG-28, 2DMAW	MACS-9 DEACTIVATED 30JUN71.
1JUL71	IWAKUNI, JAPAN CHERRY PT, N.C. EL TORO, CALIF GLENVIEW, ILL.	1ST MAW 2D MAW 3D MAW 4TH MAW	DEACTIVATIONS MWHG-1 AND MWFS-1, 1ST MAW MWHG-2 AND MWFS-2, 2D MAW MWHG-3 AND MWFS-3, 3D MAW MWHG-4 (GLENVIEW, ILLINOIS) AND MWFS-4 (GREEN BAY, WISC), 4TH MAW (USMCR) REDESIGNATIONS FROM / TO 1ST MAW: H&HS-1 MWCS-1 → MWHS-1 MWCS-18 2D MAW: H&HS-2 MWCS-2 → MWHS-2 MWCS-28 3D MAW: H&HS-3 MWCS-3 → MWHS-3 MWCS-38 4TH MAW (USMCR): H&HS-4 (DETROIT, MICH.) MWCS-4 (CHICAGO, ILL.) → MWHS-4 MWCS-48

UNCLASSIFIED

Unclassified

TAB 41-5

[redacted]

[redacted]

UNCLASSIFIED

MARINE CORPS COMMAND CENTER

7 JULY 1971

USMC/ENEMY CASUALTIES IN SEASIA

USMC BATTLE CASUALTIES

KIA/DOW	WIA (EVAC)	WIA (RTD)	MIA/PW
12,922	51,356	37,161	81/23

USMC CASUALTY FIGURES ARE PROVIDED DAILY BY HQMC CASUALTY SECTION (CODE DNA) AND REFLECT ALL CASUALTIES REPORTED AS OF 6JUL71.

USMC NON-BATTLE CASUALTIES

DEAD	INJURED	MISSING
1,678	1,935	12

FIGURES INDICATED AS INJURED ARE ONLY THOSE IN SERIOUS/CRITICAL INJURY OR DISEASE CATEGORY AND DO NOT INCLUDE THOSE OF A MINOR NATURE

USMC INFLICTED ENEMY CASUALTIES

KIA	PW	WPNS
86,535	4,098	22,879

TYPICAL DISPOSITION OF 100 USMC WIA

100

- 42 — Treated in field & returned to duty
- 58 — Admitted to hospital

→ 58

- 9 — Treated & returned to duty in SVN
- 49 — Evacuated from SVN

→ 49

- 28 — Treated in WestPac & returned to duty
- 21 — Evacuated to CONUS hospital

→ 21

- 6 — Treated & returned to full duty
- 7 — Physical disability separation
- 2 — Dies of wounds
- 6 — Other (long term treatment, etc.)

UNCLASSIFIED

[redacted]

TAB 45-1

Unclassified

UNCLASSIFIED

Department of Defense

NUMBER OF CASUALTIES INCURRED BY U. S. MILITARY PERSONNEL
IN CONNECTION WITH THE CONFLICT IN VIET-NAM

Cumulative from January 1, 1961 through June 26, 1971

7 JULY 1971

	Army	Navy *	Marine Corps	Air Force	Total
A. CASUALTIES RESULTING FROM ACTIONS BY HOSTILE FORCES					
1. Killed	25,036	1,050	11,465	452	38,003
2. Wounded or Injured					
a. Died of wounds	3,475	140	1,449	42	5,106
b. Nonfatal wounds					
Hospital care required	95,557	4,080	51,356	763	151,756
Hospital care not required	103,482	5,826	37,160	2,286	148,754
3. Missing					
a. Died while missing	1,617	182	5	391	2,195
b. Returned to control	62	7	6	26	101
c. Current missing	275	113	81	557	1,026
4. Captured or Interned					
a. Died while captured or interned	13	-	3	1	17
b. Returned to control	37	3	5	6	51
c. Current captured or interned	62	144	23	236	465
5. Deaths					
a. From aircraft accidents/incidents					
Fixed Wing	88	155	139	691	1,073
Helicopter	2,178	62	429	59	2,728
b. From ground action	27,875	1,155	12,354	136	41,520
TOTAL DEATHS a/	30,141	1,372	12,922	886	45,321
B. CASUALTIES NOT THE RESULT OF ACTIONS BY HOSTILE FORCES					
6. Current Missing	129	-	12	-	141
7. Deaths					
a. From aircraft accidents/incidents					
Fixed Wing	246	172	45	277	740
Helicopter	1,695	52	242	18	2,007
b. From other causes	4,623	603	1,391	258	6,875
TOTAL DEATHS	6,564	827	1,678	553	9,622

a/ Sum of lines 1, 2a, 3a and 4a.

*Navy figures include a small number of Coast Guard casualties.

Department of Defense
OASD (Comptroller)
Directorate for Information Operations
June 30, 1971

TAB 45-2

Unclassified

UNCLASSIFIED

UNCLASSIFIED

MARINE CORPS COMMAND CENTER

7 JULY 1971

DISPOSITION AND STRENGTH OF MAJOR US AND FW FORCES IN RVN

DISPOSITION

MR RECAP

MR I*	XXIV CORPS
220 MILES LENGTH@	30-75 MILES WIDTH
14,600 SQ MI AREA	2,860,300 CIV POP
	101ST ABN DIV (AM)
USA 23 BNs	1ST BDE 5TH INF DIV (MECH)
ARVN 36 BNs	23D INF DIV (AMERICAL)
ROKMC 4 BNs	2D ROKMC BDE
VNMC 5 BNs	147TH VNMC BDE
ARVN CAV 4 BNs	258TH VNMC BDE
TOTAL 72 BNs	1ST ARVN DIV
	2D ARVN DIV

MR II*	SRAG (NHA TRANG)
315 MILES LENGTH@	45-130 MILES WIDTH
31,300 SQ MI AREA	2,898,200 CIV POP
USA 5 BNs	173D ABN BDE
ARVN 33 BNs	ROK CAP INF DIV
ROK 18 BNs	9TH ROK DIV
ARVN CAV 3	22D ARVN DIV
TOTAL 59 BNs	23D ARVN DIV
	1ST ARVN ABN BDE

MR III*	TRAC (LONG BINH)
90 MILES LENGTH@	55-115 MILES WIDTH
10,100 SQ MI AREA	5,133,000 CIV POP
USA 5 BNs	2D BDE, 25TH INF DIV
ARVN 53 BNs	1ST AUSTRALIAN TF
AUSTRALIA 2 BNs	ROYAL THAI VOL REGT
THAILAND 6 BNs	1ST CAV DIV (AM)
ARVN CAV 5 BNs	5TH ARVN DIV
VNMC 4 BNs	18TH ARVN DIV
	25TH ARVN DIV
TOTAL 75 BNs	369TH VNMC BDE
	ARVN ABN DIV (-)

MR IV*	DRAC (CAN THO)
195 MILES LENGTH@	35-115 MILES WIDTH
14,600 SQ MI AREA	5,700,1000 CIV POP
ARVN 41 BNs	7TH ARVN DIV
ARVN CAV 5 BNs	9TH ARVN DIV
	21ST ARVN DIV
TOTAL 46 BNs	

@ Coastal Arc
# Includes 3 RGR Bns
* See RVN Recap note

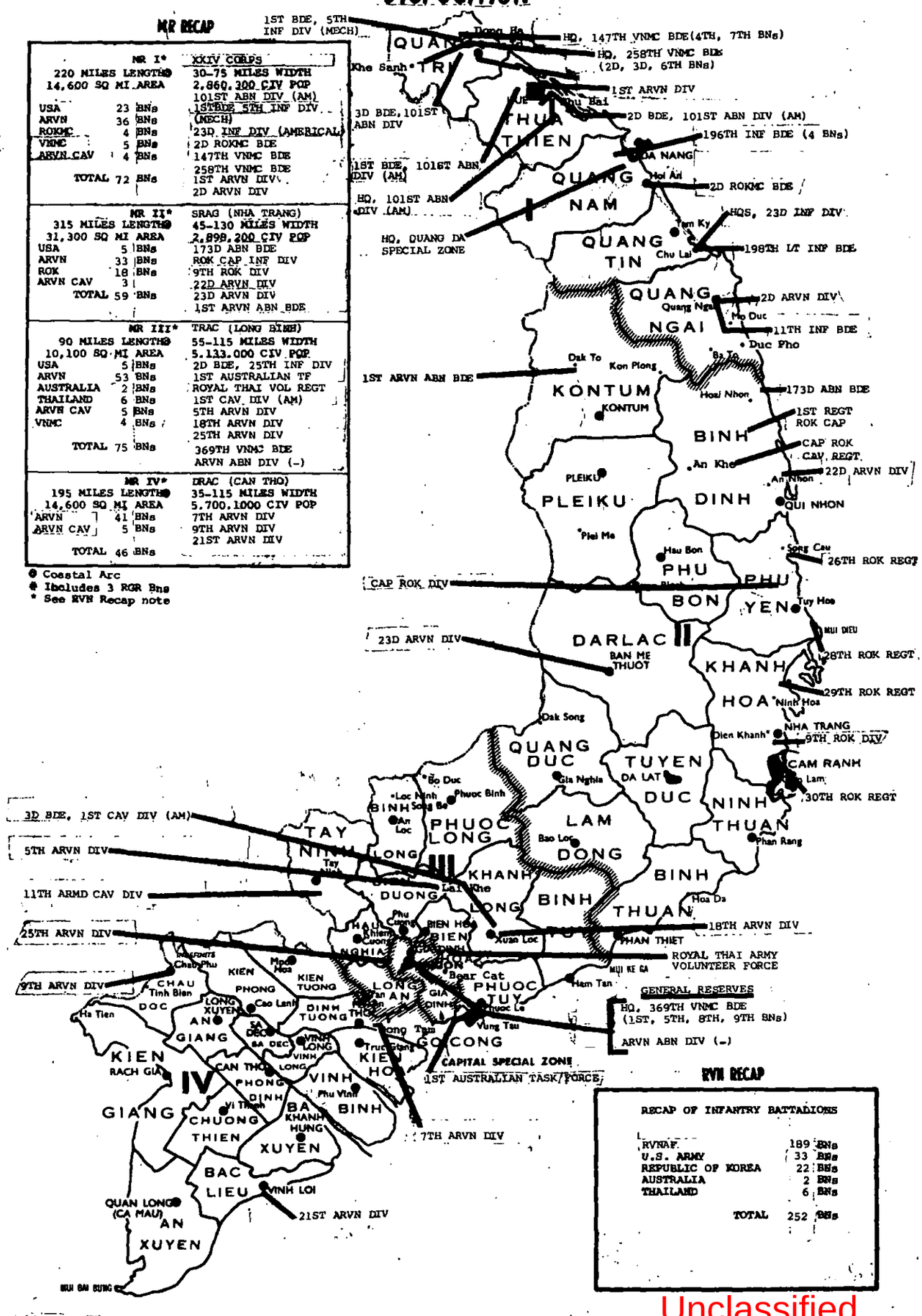

RVN RECAP

RECAP OF INFANTRY BATTALIONS

RVNAF	189 BNs
U.S. ARMY	33 BNs
REPUBLIC OF KOREA	22 BNs
AUSTRALIA	2 BNs
THAILAND	6 BNs
TOTAL	252 BNs

Unclassified

TAB 46-1

UNCLASSIFIED

[redacted]

MARINE CORPS COMMAND CENTER

UNCLASSIFIED

STRENGTHS*

7 JULY 1971

RVN ARMED FORCES (RVNAF)

ARMY (ARVN)	412,035
NAVY (VNN)	41,392
AIR FORCE (VNAF)	48,989
MARINE CORPS (VNMC)	13,651
REGIONAL FORCES (RF)	294,173
POPULAR FORCES (PF)	247,997
TOTAL RVNAF	1,058,237

UNITED STATES FORCES

ARMY	190,986
NAVY	10,934
AIR FORCE	36,926
MARINE CORPS	547
COAST GUARD	99
TOTAL U.S.	239,492

FREE WORLD MILITARY ASSISTANCE FORCES (FWMAF)

REPUBLIC OF KOREA	48,265
AUSTRALIA	6,362
PHILIPPINES	86
THAILAND	11,787
NEW ZEALAND	279
REPUBLIC OF CHINA	31
SPAIN	7
TOTAL FWMAF	66,817

TOTAL FORCES IN RVN 1,364,546

★ SOURCE: RVNAF - MACV MONTHLY RPT OF GVN STRENGTH AS OF 30APR71.

ALL OTHERS - MACV WEEKLY STRENGTH RPT AS OF 2400, 1JUL71.

UNCLASSIFIED

Unclassified

TAB 46-2

CONFIDENTIAL

[redacted]

UNCLASSIFIED

MARINE CORPS COMMAND CENTER

7 JULY 1971

PRINCIPAL MARINE OFFICERS COMUSMACV STAFF, HQ USMACV

DEPUTY J-3	BGEN WILLIAM F. DOEHLER
DIRECTOR, COMBINED INTELLIGENCE CENTER, VIETNAM, J-2	COL WILLIAM WENTWORTH
CHIEF, RESEARCH AND ANALYSIS DIVISION	COL VICTOR A. KLEBER, JR.
CHIEF, PLANS/REQUIREMENTS DIVISION, J-44	COL JAMES P. KELLEY
SENIOR MARINE ADVISOR, NAG	COL JOSHUA W. DORSEY III
CHIEF, COMMAND CENTER	COL CLIFFORD F. QUILICI

TAB 47

UNCLASSIFIED

[redacted]

Unclassified

[redacted]

UNCLASSIFIED

MARINE CORPS COMMAND CENTER

REPUBLIC OF VIETNAM MARINE CORPS

7 JULY 1971

COMMANDANT VIETNAM MARINE CORPS: LtGen Le Nguyen Khang

ASST COMDT VNMC/DIV COMDR VNMC DIV: Col Bui The Lan

SENIOR MARINE ADVISOR: Col Joshua W. DORSEY III

(3) Actual strength as of 30 April 1971 is: 13,651

The Vietnamese Marine Division Headquarters and the base camps for the Service Battalion and Medical Battalion are located in SAIGON. Seven base camps for five infantry battalions, the artillery battalions, and a training center are located in or around THU DUC, about 14 kilometers northeast of SAIGON. The remaining infantry battalions maintain a base camp at VUNG TAU, about 45 kilometers southeast of SAIGON. Assigned the mission of RVNAF General Reserve, Vietnamese Marine units are deployed to all four Military Regions. The Division has the capability for conducting either land or amphibious operations, normally deploying two or three infantry battalions with supporting elements as a separate "Brigade Force". The Vietnamese Marine Division is organized as indicated below:

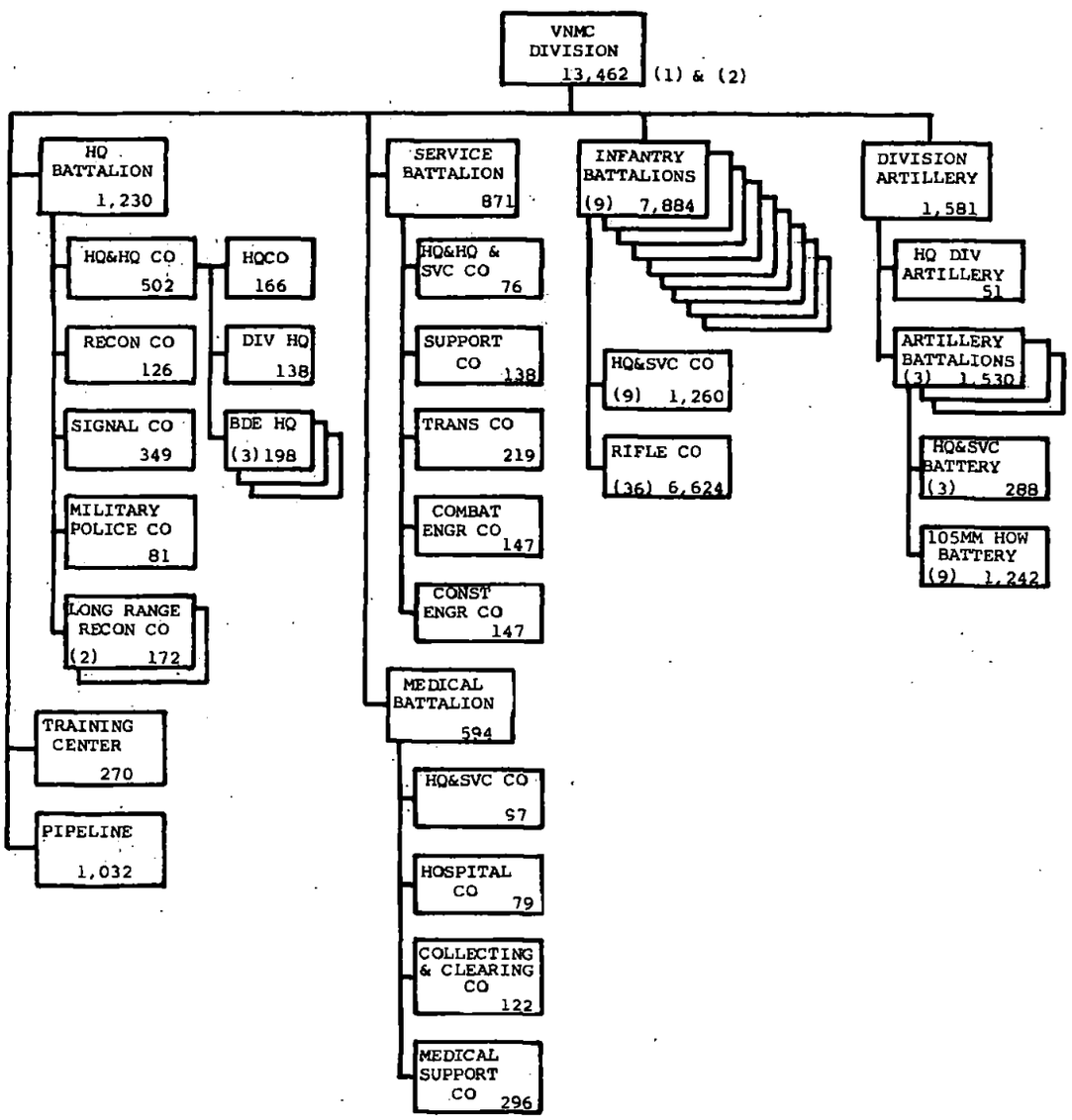

NOTES
(1) Reflects combined T/O officer and enlisted strengths.
(2) Source for organizational chart is the Consolidated RVNAF Improvement and Modernization Program of 2Aug70.
(3) Source for the actual strength figure is the monthly COMUSMACV report entitled RVNAF Strength by Military Region.

UNCLASSIFIED

TAB 48-2

Unclassified [redacted]

UNCLASSIFIED
[redacted]

[redacted]

MARINE CORPS COMMAND CENTER

INCREMENT VII

REDEPLOYMENT OF USMC UNITS FROM RVN

(7 JULY 1971)

UNIT	NOTE	STRENGTH		EQUIPMENT	STANDOWN/EDD OR ATD (AS DTG) 3	DESTINATION	ETA OR ATA (AS DTG) 3	SHIPPING
		PROGRAM XII	SEA LIFT					
EMBARK UNIT I			229			CONUS		USS TULARE LKA-112) USS FREDERICK(LST 1184)
1ST BN, 1ST MAR		1157	155		031530ZMAY71	CAMPEN	191600ZMAY71	TULARE
HQ BTRY & BTRY A, 1STBN, 11THMAR	1	130	25		021000ZMAY71	CAMPEN	211800ZMAY71	FREDERICK
VMA(AW)-225	10	304	48		031530ZMAY71	EL TORO	191600ZMAY71	TULARE
DET, FLC	1		1		031530ZMAY71 021000ZMAY71	CAMPEN	191600ZMAY71 211800ZMAY71	TULARE FREDERICK
EMBARK UNIT II			343			HAWAII/ CONUS		USS OGDEN (LPD-5)
3D BN, 1ST MAR		1157	163		130230ZMAY71	CAMPEN	301500ZMAY71	OGDEN
HQCO, 1ST MAR		220	34		130230ZMAY71	CAMPEN	301500ZMAY71	OGDEN
DET, HQBN, 1ST MARDIV		60	5		130230ZMAY71	CAMPEN	301500ZMAY71	OGDEN
1ST IT	2	6	1		130230ZMAY71	CAMPEN	301500ZMAY71	OGDEN
DET, HQ BTRY, 11TH MAR		57	8		130230ZMAY71	CAMPEN	301500ZMAY71	OGDEN
1ST BN (-), 11TH MAR		399	83		130230ZMAY71	CAMPEN	301500ZMAY71	OGDEN
DET, 1ST RADIO BN		85	12		130230ZMAY71	HAWAII	241900ZMAY71	OGDEN
HMM-262 (-)		247	5		130230ZMAY71	HAWAII	241900ZMAY71	OGDEN
HMM-263 (-)	11	248	5		130230ZMAY71	QUANTICO	301500ZMAY71	OGDEN
CO A, 1ST RECON BN		131	24		130230ZMAY71	CAMPEN	301500ZMAY71	OGDEN
DET, 7TH ENGR BN			3		130230ZMAY71	CAMPEN	301500ZMAY71	OGDEN
EMBARK UNIT III			28			HAWAII/ CONUS		USS IWO JIMA (LPH-2)
DET, HMM-262	1/13		22	37/CH-46D	191731ZMAY71	HAWAII	020650ZJUN71	IWO JIMA
DET, HMH-463	1/13		4	3/CH-53D 4/UH-1E	191731ZMAY71	QUANTICO	071745ZJUN71	IWO JIMA
DET, FLC	1		1	2/C-117D	191731ZMAY71	CAMPEN/ HAWAII	071745ZJUN71	IWO JIMA
DET, HQ BTRY, 11TH MAR			1		191731ZMAY71	CAMPEN	071745ZJUN71	IWO JIMA
EMBARK UNIT IV			65			JAPAN/OKI		USS DUBUQUE (LPD-8)
VMA-311		216	61		220315ZMAY71	IWAKUNI	262130ZMAY71	DUBUQUE
3D ITT		11	2	2/CH-53D	220315ZMAY71	OKINAWA	250600ZMAY71	DUBUQUE
3D CIT		16	2		220315ZMAY71	OKINAWA	250600ZMAY71	DUBUQUE
EMBARK UNIT V			50			HAWAII/ CONUS		USS SUMTER (LST-1181)
DET, FLC	1		50		231200ZMAY71	HAWAII/ CAMPEN	101800ZJUN71 181600ZJUN71	SUMTER
EMBARK UNIT VI			48			CONUS		USS SCHENECTADY (LST-1185)
3D 8" HOW BTRY	2	222	33		240900ZMAY71	29 PALMS	192100ZJUN71	SCHENECTADY
DET, FLC	1		15		240900ZMAY71	CAMPEN	192100ZJUN71	SCHENECTADY
EMBARK UNIT VII			47			HAWAII/ CONUS		USS OKINAWA (LPH-3)
DET, HMH-463	1		38	13/CH-53D	261330ZMAY71	HAWAII	101800ZJUN71	OKINAWA
DET, VMO-6		53		1/OV-10A	261330ZMAY71	HAWAII	101800ZJUN71	OKINAWA
DET, HML-167	1		7	8/UH-1E	261330ZMAY71	NEW RIVER	161700ZJUN71	OKINAWA
DET, FLC	1,6		2	1/A-4	261330ZMAY71	CAMPEN	161700ZJUN71	OKINAWA
EMBARK UNIT VIII			217			CONUS		USS DENVER (LPD-9)
2D BN, 1ST MAR		1157	174		011400ZJUN71	CAMPEN	260001ZJUN71	DENVER
BTRY B, 1ST BN, 11TH MAR	1	130	20		011400ZJUN71	CAMPEN	260001ZJUN71	DENVER
MASS-3	8	207	21		011400ZJUN71	EL TORO	260001ZJUN71	DENVER
DET, FLC	1,6	1000	2		011400ZJUN71	CAMPEN	260001ZJUN71	DENVER
EMBARK UNIT IX			154			HAWAII/ CONUS		USS TUSCALOOSA (LST-1187) USS DURHAM (LKA-114)
H&MS-11	1	401	60		101100ZJUN71 060800ZJUN71	EL TORO	021400ZJUL71 021500ZJUL71	DURHAM TUSCALOOSA
MABS-11	1	390	58		101100ZJUN71 060800ZJUN71	EL TORO	021400ZJUL71 021500ZJUL71	DURHAM TUSCALOOSA
HMM-463 (-)		236	3		101100ZJUN71	HAWAII	241700ZJUN71	DURHAM
HML-167 (-)		229	17		101100ZJUN71	NEW RIVER	021400ZJUL71	DURHAM
DET, H&MS-16					101100ZJUN71	SANTA ANA	021400ZJUL71	DURHAM
DET, MABS-16			15		101100ZJUN71	SANTA ANA	021400ZJUL71	DURHAM
DET, FLC					101100ZJUN71	CAMPEN	021400ZJUL71	DURHAM
HQCO, 3D MAB			1		101100ZJUN71	HAWAII	[illegible]	[illegible]

Unclassified

TAB 411-1

[redacted]

UNCLASSIFIED

[redacted] UNCLASSIFIED

MARINE CORPS COMMAND CENTER

INCREMENT VII

REDEPLOYMENT OF USMC UNITS FROM RVN

[redacted]

7 JULY 1971

UNIT	NOTE	STRENGTH PROGRAM XII	STRENGTH SEA LIFT	EQUIPMENT	STANDOWN/EDD OR ATD (AS DTG) 3	DESTINATION	ETA OR ATA (AS DTG) 3	SHIPPING
EMBARK UNIT X			37			OKI/ HAWAII		USS ST. LOUIS (LKA-116) USS DUBUQUE (LPD-8)
HML-367	12/15	228	29	7/UH-1E	160244ZJUN71	OKINAWA	190408ZJUN71	DUBUQUE
MATCU-68		68	6		160244ZJUN71	OKINAWA	190408ZJUN71	DUBUQUE
HQ, 3D MAB	6	369	2		241900ZJUN71	HAWAII	12JUL71	ST. LOUIS
EMBARK UNIT XI			82			HAWAII/ CONUS		USS MANITOWOC (LST-1180)
DET, COMM SPT CO, 7TH COMM BN	1				201145ZJUN71	HAWAII	11JUL71	MANITOWOC
DET, H&MS-16	1		2		201145ZJUN71	SANTA ANA	17JUL71	MANITOWOC
DET, MABS-16	1		80		201145ZJUN71	SANTA ANA	17JUL71	MANITOWOC
EMBARK UNIT XII			58			CONUS		USS MANITOWOC (LST-1180) USS PEORIA (LST-1183)
CO A, 1ST ENGR BN		234	35		220700ZJUN71	CAMPEN	10JUL71	PEORIA
CO A, 1ST MT BN		82	12		220700ZJUN71	CAMPEN	10JUL71	PEORIA
CO C, 1ST SP BN		76	11		220700ZJUN71	CAMPEN	10JUL71	PEORIA
H&MS-16 (-)	15	458			201145ZJUN71	SANTA ANA	17JUL71	MANITOWOC
MABS-16 (-)		571			201145ZJUN71	SANTA ANA	17JUL71	MANITOWOC
EMBARK UNIT XIII			87			HAWAII/ CONUS		USS DEFIANCE (LSD-31) USS ST. LOUIS (LKA-116) USS FREDERICK (LST-1184)
CO A(REIN), 7TH ENGR BN		284	40		221040ZJUN71	29 PALMS	18JUL71	PT. DEFIANCE
COMM SPT CO (-), 7TH COMM BN		201	36		241900ZJUN71	HAWAII	12JUL71	ST. LOUIS
CO A, 1ST MED BN		30	4		221040ZJUN71	CAMPEN	18JUL71	PT. DEFIANCE
DET, FLC	1,6				221040ZJUN71 231130ZJUN71	HAWAII/ CAMPEN	11JUL71 [redacted]JUL71	PT. DEFIANCE FREDERICK
DET, 5TH COMM BN	2	34	5		221040ZJUN71	CAMPEN	18JUL71	PT. DEFIANCE
5TH CIT		16	2		221040ZJUN71	CAMLEJ	18JUL71	PT. DEFIANCE
EMBARK UNIT XIV			131			CONUS		USS FREDERICK (LST-1184) USS ST. LOUIS (LKA-116)
1ST MP BN	2	585	100		231130ZJUN71	CAMPEN	[redacted]JUL71	FREDERICK
FLC (-)	6	1217	31		241900ZJUN71	CAMPEN	19JUL71	ST. LOUIS
MISC								
CAPS	9	476			1MAY/			
CACO HQ	9	48			1MAY/			
CAG HQ	9	76			1MAY/			
DET, 11TH DENTAL CO	7	2			7JUN/	IWAKUNI		
DET, VMGR-152	7	64			17JUN/	OKINAWA		
NON-FMF SPACES TO BE DELETED IN RVN								
TDY	5	1			8JUN			
STRAAD FLD TEAM	5	1			8JUN			
NAW NAESU LN	5	2			8JUN			
NAVY/MC JUD ACT	5	1			15JUN			
TOTAL	4	13,593						

USMC ELEMENTS IN RVN AFTER 1 JUL 71

THE FOLLOWING IS A LIST OF USMC OSD PROGRAM XII SPACES REMAINING IN RVN AFTER 1 JULY 1971.

NAVFORV	5
HQ STAFF MACV	49
JUSPAO	4
SAE	2
I CORPS	3
NAV ADV GRU	80
SOG	17
AID DEPT STATE	3
DEF COM AGCY	11
SUB UNIT 1, 1ST ANGLICO	180
EMBASSY SECURITY	156
CORDS	5
NOG DET YOV-10	21
DCPG LNO	3
DET, H&HS-18	20
DOD SPEC REP	3
ROK LOG TEAM	13
CREDIT ACCOUNT	60
MEDTC	1
WESTPAC TRANS OFF	1
TOTAL	637

NOTES:

1. PROGRAM XII SPACE REDUCTIONS FOR THIS DETACHMENT REFLECTED WITH PARENT UNIT DEPLOYING IN ANOTHER EMBARKATION UNIT.
2. UNIT TO BE DEACTIVATED AT DESTINATION.
3. THE DTGs IN THIS COLUMN INDICATE ACTUAL TIME OF DEPARTURE/ARRIVAL AND ARE IN ZULU TIME.
4. UNASSIGNED
5. THIS UNIT HAS NO EMBARKATION REQUIREMENT. SPACES WILL BE ADMINISTRATIVELY DROPPED ON DATE SHOWN.
6. SPACES TO BE DEACTIVATED IN RVN.
7. UNIT DEPLOYED BY ORGANIC AIR 27 JUNE 1971.
8. UNIT TRANSFERRED 68 PROGRAM XII SPACES TO DET, MASS-2 AT IWAKUNI, JAPAN UPON EMBARKATION.
9. 2D CAG DEACTIVATED IN RVN 171500ZMAY71.
10. UNDER THE CODE NAME TRANSPAC KEY UNCLE, VMA(AW)-225 FERRIED 12/A-6A TO EL TORO AND 2 F-4B TO MIRAMAR. TRANSPAC KEY UNCLE COMPLETED 11MAY71.
11. EIGHT PERSONNEL AND 10/CH-46D HELICOPTERS, ALONG WITH OTHER MISCELLANEOUS HEAVY EQUIPMENT FROM HMM-263, REDEPLOYED TO OKINAWA ABOARD THE USS DUBUQUE, DEPARTED DANANG AT 050730ZMAY71. ARR OKINAWA 080600ZMAY71.
12. FOUR PERSONNEL AND ONE AH-1J AIRCRAFT, ALONG WITH OTHER MISCELLANEOUS HEAVY EQUIPMENT FROM HML-367, REDEPLOYED TO TO OKINAWA ABOARD THE USS DUBUQUE, DEPARTED DANANG AT 050730ZMAY71. ARR OKINAWA 080600ZMAY71.
13. [redacted] IWO JIMA OFF LOAD AT HAWAII 30/CH-46D, AND AT SAN DIEGO 7/CH-46D, 3/CH-53D AND 4/UH-1E.
14. OF THE TOTAL OF 13,593, THREE SPACES WERE CREDITED TO THE MARINE CORPS DEBIT/CREDIT ACCOUNT, THEREFORE, MARINE CORPS AUTHORIZED STRENGTH IN RVN IS REDUCED BY A TOTAL OF 13,590 SPACES, LEAVING 637 SPACES ON 1 JULY 1971.
15. USS DUBUQUE WITH PERSONNEL FROM H&MS-16 (10 USMC), HML-367 (1 USMC), AND FLC (19 USMC) WITH 22/AH-1G HELICOPTERS, ALONG WITH OTHER MISCELLANEOUS HEAVY EQUIPMENT FROM FLC, REDEPLOYED TO SUBIC, DEPARTED DANANG AT 311730ZMAY71. ARRIVED SUBIC 021234ZJUN71.

Unclassified

TAB 411-2

UNCLASSIFIED [redacted]

[redacted]

UNCLASSIFIED

MARINE CORPS COMMAND CENTER

TABLE OF CONTENTS

14 JULY 1971

SECTION I - MARINE CORPS FORCES - WORLD WIDE	LIST OF EFFECTIVE TABS	DATE OF LASTEST CHANGE
ALLOCATION OF MARINE CORPS PERSONNEL	11	23JUN71
SELECTED PERSONNEL AND AIRCRAFT DATA	12	14JUL71●
UNITED STATES MARINE CORPS RESERVE	13-1	30DEC70
	13-2	23DEC70
	13-3	7JUL71
	13-4	23DEC70
MISCELLANEOUS NON-FMF UNITS	14-1	14JUL71●
(MARINE BARRACKS)	14-2	30JUN71
(MARINE SECURITY GUARD BATTALION)	14-3	14APR71
(MARINE DETACHMENTS AFLOAT)	14-4	14APR71
	14-5	30JUN71
SECTION II - STATUS OF FLEET MARINE FORCES		
STATUS OF FMF UNITS	21-1	14JUL71●
	21-2	14JUL71●
	21-3	14JUL71●
	21-4	14JUL71●
	21-5	14JUL71●
	21-6	14JUL71●
	21-7	14JUL71●
	21-8	14JUL71●
	21-9	14JUL71●
RECAPITULATION OF FMF ACTUAL STRENGTHS	22	14JUL71●
DISTRIBUTION OF MAJOR GROUND EQUIPMENT AND AIRCRAFT	23	7JUL71
SECTION III - DISPOSITION OF FLEET MARINE FORCE UNITS		
FLEET MARINE FORCE DISPOSITION, DISTRIBUTION BY BATTALION/ SQUADRON AND MOVEMENTS	31-1	14JUL71●
	31-2	14JUL71●
FMF PACIFIC UNIT LOCATIONS AND STRENGTHS (MIDPAC/EASTPAC)	32	14JUL71●
FMF PACIFIC UNIT LOCATIONS, STRENGTHS AND OSD CEILING CONSIDERATIONS (WESTPAC)	33	14JUL71●
LANDING FORCES - 7TH FLEET	34	14JUL71●
FMF ATLANTIC UNIT LOCATIONS AND STRENGTHS	35	14JUL71●
LANDING FORCES - MEDITERRANEAN AND CARIBBEAN	36-1	14JUL71●
GUANTANAMO BAY BATTALION	36-2	14JUL71●
SECTION IV - GENERAL		
CHRONOLOGY OF SIGNIFICANT EVENTS	41-1	17MAR71
	41-2	21MAR71
	41-3	23JUN71
	41-4	16JUN71
	41-5 MISSING	14JUL71
STATISTICAL SUMMARY OF III MAF OFFENSIVE OPERATIONS IN VIETNAM	42-1	21APR71
	42-2	18NOV70
	42-3	18NOV70
	42-4	10MAR71
	42-5	12MAY71
	42-6	12MAY71
LANDING FORCES - 7TH FLEET; SUMMARY OF OPERATIONS IN RVN	43-1	18NOV70
	43-2	18NOV70
	43-3	18NOV70
U.S. MARINE CORPS AIRCRAFT LOSSES IN SEASIA	44-1	18NOV70
	44-2	18NOV70
	44-3	18NOV70
	44-4	18NOV70
	44-5	18NOV70
	44-6	18NOV70
	44-7	18NOV70
	44-8	18NOV70
	44-9	25NOV70
	44-10	5MAY71
	44-11	5MAY71
USMC/ENEMY CASUALTIES IN SEASIA; CUMULATIVE DOD CASUALTY FIGURES ON U.S. MILITARY PERSONNEL AND COMPARATIVE USMC/ENEMY KIA IN CONNECTION WITH THE CONFLICT IN RVN	45-1	14JUL71●
	45-2	14JUL71●
	45-3	26MAY71
	45-4	30JUN71
DISPOSITION AND STRENGTH OF MAJOR U.S. AND FW FORCES IN RVN	46-1	14JUL71●
	46-2	14JUL71●
COMUSMACV STAFF, PRINCIPAL MARINE OFFICERS HQ MACV	47	7JUL71
REPUBLIC OF KOREA MARINE CORPS	48-1	14JUL71●
REPUBLIC OF VIETNAM MARINE CORPS	48-2	7JUL71
VIETNAM GEOGRAPHIC AND CLIMATE DATA	49-1	18NOV70
	49-2	18NOV70
CHRONOLOGY OF FMF DEPLOYMENT AND STRENGTH IN RVN	410-1	20JAN71
	410-2	25NOV70
	410-3	25NOV70
	410-4	25NOV70
	410-5	25NOV70
	410-6	25NOV70
	410-7	9DEC70
	410-8	10MAR71
	410-9	28APR71
	410-10	23JUN71
	410-11	23JUN71
REDEPLOYMENT OF USMC UNITS FROM RVN	411-1 (MISSING 1-2)	14JUL71
	411-2	14JUL71

CONTENTS OF THIS PUBLICATION
DOWNGRADED AT 3 YEAR
INTERVALS
DECLASSIFIED AFTER 12 YEARS
DOD DIR 5200.10

Unclassified

UNCLASS[redacted]

MARINE CORPS
JUL 20 1971
REFERENCE BRANCH

[redacted]

Unclassified

[redacted]

[redacted]
UNCLASSIFIED

MARINE CORPS COMMAND CENTER

SELECTED PERSONNEL AND AIRCRAFT DATA

PERSONNEL

14 JULY 1971

	STRENGTH	PERCENT USMC	PERCENT FMF	PERCENT FMFPAC
USMC TOTAL	213,980 *	100.00		
FLEET MARINE FORCES	99,981	46.71	100.00	
FMF ATLANTIC	38,863 #	18.16	37.76	
FMF PACIFIC	61,118 #	28.55	62.24	
VIETNAM	517 ¢	00.24		

SOURCE: * HQMC 1080-20 (ESTIMATED PERSONNEL DATA) AS OF 19JUN71.
MARES FORSTAT REPORT DATED 7JUL71.
¢ MACV WEEKLY STRENGTH REPORT AS OF 2400, 8JUL71.

AIRCRAFT

	FIXW	HELO	TOTAL	PERCENT USMC	PERCENT FMF	PERCENT FMFPAC
USMC TOTALS **	975	616	1,591	100.00		
FLEET MARINE FORCES @	678	544	1,222	76.81	100.00	
FMF ATLANTIC @	287	213	500	31.43	40.91	
FMF PACIFIC @	391	331	722	45.38	59.09	

SOURCE: ** DC/S AIR STATUS BOARD PHOTO AS OF 26MAR71.
@ MARES FORSTAT REPORT DATED 17MAY71.

UNCLASSIFIED

Unclassified

[redacted]

TAB 12

CONF[redacted]AL UNCLASSIFIED

MARINE CORPS COMMAND CENTER

MISCELLANEOUS NON-FMF UNITS
MARINE BARRACKS

14 JULY 1971

MAP SYMBOL	MARINE BARRACKS	COMMANDING OFFICER	T/O	O/H
EAST COAST				
B-1	MB, NS, ANNAPOLIS, MARYLAND	MAJOR R. C. WATSON	68	75
B-2	MB, NB, BOSTON, MASSACHUSETTS	COL E. H. MACKEL	80	91
B-3	MB, NB, BROOKLYN, NEW YORK	LTCOL G. C. COOK	123	131
B-4	MB, NAS, BRUNSWICK, MAINE	MAJOR C. H. CIUBA	84	85
B-5	MB, NB, CHARLESTON, S. C.	LTCOL A. J. SPENCE	138	146
B-6	MB, NWS, CHARLESTON, S. C.	MAJOR A. E. LEE	200	192
B-7	MB, FORT MEADE, MARYLAND	COL R. J. SCHENING	365	357
B-8	MB, NAD, EARLE, NEW JERSEY (COLTS NECK)	MAJOR C. R. SMITH	165	173
B-9	MB, NTC, GREAT LAKES, ILLINOIS	COL J. R. WAYERSKI	173	189
B-10	MB, NAS, JACKSONVILLE, FLORIDA	MAJOR J. E. LAVIN	141	159
B-11	MB, NB, KEY WEST, FLORIDA	MAJOR G. W. BROOKS	136	138
B-12	MB, NAS, LAKEHURST, NEW JERSEY	MAJOR C. A. AUSTIN	71	74
B-13	MB, NSB, GROTON, NEW LONDON, CONN.	CAPT J. R. KOPKA	62	61
B-14	MB, NB, NEWPORT, RHODE ISLAND	MAJOR J. L. WILLIAMS	121	126
B-15	MB, NB, NORFOLK, VIRGINIA	COL B. W. ALFORD	365	376
B-16	MB, NAS, PATUXENT RIVER, MARYLAND	CAPT J. J. MULHOLLAND	84	86
B-17	MB, NB, PHILADELPHIA, PENNSYLVANIA	COL R. A. HEYWOOD	192	217
B-18	MB, NSY, PORTSMOUTH, NEW HAMPSHIRE	LTCOL R. F. VANCANTFORT	68	80
B-19	MB, NSY, PORTSMOUTH, VIRGINIA	MAJOR C. M. ISBELL	115	133
B-20	MB, NAS, QUONSET POINT, RHODE ISLAND	MAJOR P. F. LESSARD	88	92
B-21	MB, 8TH & I STs S. E., WASHINGTON, D. C.	COL D. M. TWOMEY	604	707
B-22	MB, NWS, YORKTOWN, VIRGINIA	LTCOL C. R. VORGANG	232	230
B-23	CINCLANTFLT, NB, NORFOLK, VIRGINIA	MAJOR C. R. ARIOLA	108	105
B-24	MB, NDC, PORTSMOUTH, NEW HAMPSHIRE	LTCOL R. F. CLANCY	231	251
B-25	MB, NAS, CECIL FIELD, FLORIDA	MAJOR D. A. POWELL	96	95
WEST COAST				
B-26	MB, NAS, ALAMEDA, CALIFORNIA	MAJOR W. R. SVENSON	97	110
B-27	MB, BREMERTON, WASHINGTON	LTCOL C. M. DANIELS	103	105
B-28	MB, NWS, CONCORD, CALIFORNIA	COL W. R. GRUBAUGH	202	234
B-29	MB, NWS, FALLBROOK, CALIFORNIA	MAJOR B. T. CHRISTLIEH	86	91
B-30	MB, NAD, HAWTHORNE, NEVADA	MAJOR J. L. BARKER	114	122
B-31	MB, NB, LONG BEACH, CALIFORNIA	MAJOR W. R. DUDMAN	136	155
B-32	MB, NAD, MC ALESTER, OKLAHOMA	MAJOR W. H. BARNARD	92	109
B-33	MB, NAS, MOFFET FIELD, CALIFORNIA	CAPT H. W. COURTER	97	108
B-34	MB, NAS, NORIS, SAN DIEGO, CALIFORNIA	MAJOR W. J. DONOVAN, JR.	78	84
B-35	MB, NAS, WHIDBEY ISLAND, OAK HARBOR, WASH.	CAPT G. J. MISKE	79	73
B-36	MB, NS, SAN DIEGO, CALIFORNIA	COL R. W. TELLER	246	250
B-37	MB, NSY, HUNTER POINT, SAN FRANCISCO, CALIF.	MAJOR J. A. HARING	61	63
B-38	MB, NS, TI, SAN FRANCISCO, CALIFORNIA	COL J. P. OCONNELL	291	304
B-39	MB, NWS, SEAL BEACH, CALIFORNIA	MAJOR D. L. PARKER	101	117
B-40	MB, NTS, VALLEJO, CALIFORNIA	MAJOR G. L. PETERSON	107	109
B-41	MB, NTS, KEYPORT, WASHINGTON	MAJOR B. G. HUNTER	120	123
B-42	MB, NAS, LEMOORE, CALIFORNIA	MAJOR D. F. CLOUD	57	70
OVERSEAS				
B-43	MB, KENITRA, MOROCCO	COL T. E. GLEASON	157	168
B-44	MB, NB, GUANTANAMO, CUBA	COL V. D. BELL, JR.	228	243
B-45	MB, NAVACT, ROTA, SPAIN	MAJOR P. L. LEFEVRE	113	123
B-46	MB, FIFTEENTH NAVDIST, RODMAN, CANAL ZONE	COL G. H. BENSKIN	111	124
B-47	MB, NS, BERMUDA	MAJOR W. R. HUF	118	107
B-48	MD, NAVACT, LONDON, ENGLAND	MAJOR A. D. NASTRI	47	60
B-49	MB, NAVSPTACT, NAPLES, ITALY	MAJOR D. G. HENDERSON	91	92
B-50	MB, SAN JUAN, PUERTO, RICO	LTCOL D. C. BINNEY	110	113
B-51	MB, NS, ROOSEVELT ROADS, PUERTO RICO	MAJOR A. J. FRAIOLI	89	87
B-52	MB, NF, ICELAND	MAJOR R. J. WEIDNER	121	129
B-53	MB, NS, ADAK, ALASKA	MAJOR J. E. PAGE	81	102
B-54	MB, NS, KODIAK, ALASKA	MAJOR R. B. MASON	56	77
B-55	MB, NB, GUAM	COL W. G. TIMME	272	285
B-56	MB, NAD, OAHU, HAWAII	LTCOL F. X. FREY	251	275
B-57	MB, NB, SUBIC BAY, R.P.I.	COL J. H. KEITH	466	543
B-58	MB, NAS, BARBERS POINT, OAHU, HAWAII	MAJOR A. J. MCCARTHY	86	89
B-59	MB, PEARL HARBOR, OAHU, HAWAII	COL W. F. FRY	389	412
B-60	MB, NAF, NAHA, OKINAWA	MAJOR V. D. SUTTON	48	51
B-61	UNASSIGNED			
B-62	UNASSIGNED			
B-63	MB, FLTACT, SASEBO, JAPAN	MAJOR F. E. COIT	81	103
B-64	MB, FLTACT, YOKOSUKA, JAPAN	COL T. J. STEVENS	157	154
B-65	WHITE HOUSE WEST, CAMP PENDLETON, CALIFORNIA		67	80
B-66	WHITE HOUSE WEST, EL TORO, CALIFORNIA		163	174
B-67	HMX-1 PRESIDENTS SECURITY		148	207

UNCLASSIFIED

Unclassified [redacted]

TAB 14-1

[redacted] UNCLASSIFIED

MARINE CORPS COMMAND CENTER

STATUS OF FMF UNITS **

14 JULY 1971

UNIT *	NOTE	UNIT COMMANDER	LOCATION	STRENGTH USMC	STRENGTH USN	UNIT READINESS* CURRENT RATE	RSN	P	S	R	T	EXPECTED RATE	EXPECTED BY	MAJOR EQUIPMENT
FMF				99981	2825									
MIDPAC				5715	758									
FMFPAC		LTGEN W. K. JONES	HAWAII	51118	1781	C1		1	1	1	1			
HQ FMFPAC				1047	36									
H&SBN		COL R. G. LAUFFER	CP SMITH	980	27	C1		1	1	1	1			
DET 2, 21ST DENTAL CO		CAPT M. R. HAMILTON (USN)			9	C1		1	1	1	1			
11TH CIT (CADRE)		CAPT K. W. CLEM				C4	N	5	5	5	5			
HQ SQDN		LTCOL C. E. DORFFELD	KANEOHE	63		C4	P	4	1	1	1	C4	710731	5/T-28B, 2/UH-34D, 1/US-2B, 1/VH-34D
1ST ANGLICO (-)		MAJ J. B. LEONARD	SDIEGO	153	3	C4	S	2	4	2	1	C3	710601	
SU 1, 1ST ANGLICO (MACV)	*	LTCOL E. F. SHOULTS	SAIGON	197	10	C1		1	1	1	1			
1ST RADIO BN		LTCOL E. D. RESNIK	KANEOHE	422		C1		1	1	1	1			
1ST MARINE BRIGADE		BGEN V. A. ARMSTRONG	KANEOHE	3896	109	C4	P	4	3	3	3	C3	711031	
H&S CO		CAPT H.J.TRAUTWEIN, JR.		251	14	C1		1	1	1	1			
1ST ITT		CAPT T. E. NADOLSKI		14		C1		1	1	1	1			
DET 1, 21ST DENTAL CO		CDR J. D. CRAWFORD(USN)		15		C1		1	1	1	1			
COMM SPT CO, 7TH COMM BN(-)		MAJ R. T. HIMMERICH	ENROUTE KANEOHE											
3D MARINES (-)(REIN)		LTCOL K.L. CHRISTENSEN	KANEOHE			C4	P	4	4	4	4	C3	711030	
HQCO (-)		CAPT C. S. CERTAIN		182	19	C4	P	4	4	4	4	C3	710930	
1ST BN		MAJ P. J. KIESELBACH		963	51	C4	P	4	1	1	4	C4	710801	6/105 HOW TD, 8/106MM RR, 8/81 MORT
2D BN		MAJ F. W. BEEKMAN		118		C4	P	4	3	3	4	C3	711231	8/106MM RR, 8/81 MORT
CO A (REIN), 3D SP BN (-) (CADRE)						C4	P	4	2	3	4	C3	711130	
CO A, 3D ENGR BN (-)		CAPT R. I. EDWARDS	KANEOHE	107		C3	P	3	3	3	2	C2	711201	
CO D, 3D AMTRAC BN (-)		CAPT K. R. BURNS		144		C4	P	4	1	1	4	C3	710930	3/LVTP-5 COMD, 44/LVTP-5, 1/LVTR
PROV SERV BN		MAJ R. E. LANGTON		211		C4	P	4	4	4	4	C3	710930	
CO A (REIN), 3D MT BN (-)		CAPT R. E. MANUEL		16		C4	P	4	2	2	4	C3	711215	
1ST BN (-), 12TH MAR		MAJ L. E. KOLEBER				C4	P	4	2	3	4	C3	711031	12/105 HOW TD
CO A, 3D RECON BN (-) (REIN)						C4	P	4	4	4	4	C3	711031	
CO A, (REIN), 3D MED BN (-) (CADRE)														
MAG-24		COL R. E. CAREY	KANEOHE	1875	25	C3	X	4	2	3	4	C3	710915	
H&MS-24		LTCOL C. L. PHILLIPS		448		C3	S	2	3	3	2	C2	710901	1/C-117D, 5/CH-46A, 2/TA-4F
MABS-24		LTCOL W. F. LEDBETTER		343	25	C4	P	4	2	2	2	C3	710915	
MATCU-70		WO O. F. GOUR JR.		38		C4	P	4	2	1	4	C3	710801	
VMFA-122		LTCOL L. FURSTENBERG.		166		C4	P	4	1	4	4	C3	710901	8/F-4B
VMFA-212		LTCOL R. D. REVIE		209		C3	X	4	1	3	3	C2	710704	12/F-4J
VMFA-235		LTCOL F.L. FARRELL, JR.		227		C3	X	4	1	1	4	C2	710630	16/F-4J
MACS-2		LTCOL P. L. ELLIOTT		174		C4	R	4	3	4	3	C3	710801	
HMM-262		LTCOL F. K. WEST, JR.		159		C4	P	4	1	4	4	C3	710930	30/CH-46D
HMH-463		MAJ M. E. EDWARDS		111		C4	P	4	4	4	4	C4	710825	18/CH-53D
DET, VMO-6 (-)														6/OV-10A
DET, HML-367 (-)														8/UH-1E
WESTPAC				26587	769									
FMFPAC														
III MAF		LTGEN D. J. ROBERTSON	CP COURTNEY	26587	769									
H&S CO				131		C1		1	1	1	1			
3DMARDIV(-)(REIN) (III MAF)	*	MAJGEN L. METZGER	CP COURTNEY	14525	580	C2	T	1	1	1	2	C1	710705	
HQBN		COL W. D. POMEROY		1552	41	C2	X	1	1	2	2	C2	720601	
3D ITT	22	CAPT M. R. LAMB												
11TH ITT	22	CAPT C. K. ABLES												
15TH ITT	22	CAPT E. R. KRAMER	CP HANSEN											
17TH ITT	22	CAPT G. H. JOHNSON, JR.												
SCAMP	22													
3D CIT		CAPT R. E. SHROYER		14		C1		1	1	1	1			
1ST SSCT		CAPT T. L. STROHECKER		8		C3	S	1	3	1	1	C1	710805	
3D DENTAL CO		CAPT W. J. KENNEDY(USN)		4	66	C1		1	1	1	1			

* PARENTHETIC UNIT INDICATES OPCON WHEN DIFFERENT FROM ORGANIZATIONAL STRUCTURE.

TAB 21-1

Unclassified [redacted]

UNCLASSIFIED

S[redacted] UNCLASSIFIED

MARINE CORPS COMMAND CENTER

STATUS OF FMF UNITS**

14 JULY 1971

UNIT *	NOTE	UNIT COMMANDER	LOCATION	STRENGTH USMC	STRENGTH USN	UNIT READINESS ☆ CURRENT RATE	RSN	P	S	R	T	EXPECTED RATE	BY	MAJOR EQUIPMENT
4TH MARINES	24	COL R. T. HANIFAN JR.	CP HANSEN			C2	T	2	1	1	2	C2	720601	
HQCO		MAJ R. F. LUSK		219	6	C2	T	1	1	2	2	C2	710601	
1STBN		LTCOL D. G. ROBISON		1043	43	C2	P	2	1	1	2	C1	710825	8/106MM RR, 8/81 MORT
2DBN		LTCOL W. H. NULTY		1011	35	C2	P	2	1	2	2	C1	710930	8/106MM RR, 8/81 MORT
3DBN	1	LTCOL A. J. CASTELLANA		1043	38	C2	P	2	1	1	2	C1	710930	8/106MM RR, 8/81 MORT
9TH MARINES		COL J. V. MCLERNAN	CP SCHWAB			C2	T	1	1	1	2	C2	710805	
HQCO		CAPT M. H. CRAFTON, JR.		222	5	C2	R	1	1	2	2	C1	710930	
1STBN		LTCOL F.W.M.WOODROW,JR.		992	36	C1		1	1	1	1			8/106MM RR, 8/81 MORT
2DBN (31ST MAU)	2*	LTCOL F. J. JOHNSON,JR.	31ST MAU	1039	34	C2	T	1	1	1	2	C1	710707	8/106MM RR, 8/81 MORT
3DBN		LTCOL B. S. SNELL	CP SCHWAB	1041	40	C2	P	2	1	1	2	C1	711105	8/106MM RR, 8/81 MORT
12TH MARINES (-)		COL J. P. O'CONNELL	CP HANSEN			C2	T	1	1	1	2	C1	710825	
HQ BTRY (-)		CAPT D. J. LABOISSIERE		229	6	C2	T	1	1	2	2	C1	710825	
2DBN		MAJ R. S. VARNEY		534	14	C2	T	1	1	1	2	C2	710605	36/105 HOW TD
3DBN		LTCOL W. J. HALLISEY		508	15	C2	T	1	1	1	2	C1	710705	24/105 HOW TD
4THBN (-) (REIN)		LTCOL K. G. PATTERSON		504	11	C2	P	2	1	2	2	C2	710830	1/M51 VTR, 17/155 HOW SP
3D PLAT, 1ST 8" HOW BTRY	4													2/8" HOW SP
3D SERV BN (-)		COL D. J. HUNTER	CP HANSEN	769	27	C2	T	1	1	1	2	C1	710825	
3D TANK BN (-)		LTCOL C. R. STIFFLER		624	13	C2	X	1	1	1	2	C2	720601	58/M48 TANK, 5/M51 VTR 8/M67 TANK
9TH MT BN (-)		MAJ J. R. TRAYLOR		318	7	C2	X	1	1	1	1	C1	710805	
3D MED BN (-)		LTCOL F. E. CLARK, JR.		142	39	C3	S	3	3	3	2	C2	710911	
1ST HOSPITAL CO (CADRE)		LTJG H.D. CASH (USN)	CP SCHWAB	28	16	C4	P	4	1	2	4	C4	711231	
3D MT BN (-)		MAJ B. L. PARKS		190	7	C1		1	1	1	1			
3D RECON BN (-)		LTCOL T. R. STUART		347	25	C2	P	2	1	1	2	C1	710706	
3D ENGR BN (-) (REIN)	17	LTCOL C. R. GIBSON		709	8	C2	T	2	1	2	2	C1	720630	
CO D (REIN),7TH ENGR BN(-)		MAJ D. R. COMER	CP HAGUE					5	5	5	5			
BRIDGE PLAT, 1ST BRIDGE CO								5	5	5	5			
7TH COMM BN (-)		LTCOL M. W. MCCOURY	CP SCHWAB	486	7	C2	X	2	1	2	1	C2	720601	
3D SP BN (-)		LTCOL R. L. ANDERTON	CP HAGUE	365	29	C2	X	1	1	2	2	C2	720601	
1ST AMTRAC BN (-)		LTCOL J. G. BUCKMAN	CP SCHWAB	584	12	C2	P	2	2	2	2	C1	710805	5/LVTE-1, 10/LVTP-5 CMD, 97/ LVTP-5, 3/LVTR
1ST MAW (III MAF)	*	MAJGEN R. G. OWENS,JR.	IWAKUNI	8851	139	C2	R	2	2	2	2	C2	711001	
JAPAN (1ST MAW ELEMENTS)				5830	107									
MWHS-1		COL W. C. KELLY	IWAKUNI	819	22	C2	S	2	2	2	1	C2	710601	
7TH CIT (1ST MAW)	*	WO J. A. CANONICO		20		C1		1	1	1	1			
11TH FORCE DENTAL CO (-)		CDR J. J. LYONS (USN)		2	32	C1		1	1	1	1			
3D SSCT		CAPT G. G. MEYERS		12		C2	X	1	1	1	1	C1	710801	
MACG-18 (-)		LTCOL F. L. DELANEY	IWAKUNI			C3	T	2	1	2	3	C2	710524	
H&HS-18 (-)		MAJ L. E. OBENHAUS		231		C2	R	2	2	2	2	C1	710901	
MASS-2 (-)		LTCOL T. G. DAVIS		177		C3	R	1	2	3	2	C2	710615	
MWCS-18		MAJ R. S. KAYE		204		C2	P	2	1	1	1	C1	710620	
MAG-12		COL E. J. RUTTY	IWAKUNI			C2	R	2	2	2	2	C1	710701	
H&MS-12		MAJ D. E. DONOVAN		557		C3	R	1	2	3	2	C2	710901	6/TA-4F
MABS-12		LTCOL J. L. DRIEFER		377	20	C2	R	2	1	2	2	C2	710930	
MATCU-62 (MAG-12)	*	CAPT A. E. PETERS		39		C4	P	4	1	2	3	C3	710901	
VMA-211		LTCOL D. G. GASCOIGNE		209	2	C2	R	2	2	2	2	C1	710915	17/A-4E
VMA-311		LTCOL K. L. BATT		186	1	C2	P	2	2	2	1	C2	711002	24/A-4E
VMA (AW)-533		LTCOL R. P SPRIER		245		C2	R	2	1	2	1	C2	711001	12/A-6A
OTHER														
SU 2, HAMS-36			FUJI											

* PARENTHETIC UNIT INDICATES OPCON WHEN DIFFERENT FROM ORGANIZATIONAL STRUCTURE.

Unclassified

UNCLASSIFIED [redacted]

TAB 21-2

[redacted] UNCLASSIFIED

MARINE CORPS COMMAND CENTER

STATUS OF FMF UNITS **

14 JULY 1971

UNIT *	NOTE	UNIT COMMANDER	LOCATION	STRENGTH USMC	STRENGTH USN	UNIT READINESS ☆ CURRENT RATE	RSN	P	S	R	T	EXPECTED RATE	EXPECTED BY	MAJOR EQUIPMENT
MAG-15		COL R. R. MILLER	IWAKUNI			C2	T	2	2	2	3	C1	710915	
H&MS-15		MAJ M. R. CADY		554		C2	R	1	1	2	1	C1	711001	4/TA-4F
MABS-15		MAJ R. L. BECKWITH		373	21	C2	R	2	1	2	2	C2	710731	
MATCU-60 (MAG-15)	*	1STLT C. R. HICKEY		56		C2	R	2	1	2	2	C1	710801	
VMFA-115		LTCOL R. R. POWELL		289	1	C2	X	2	2	2	3	C2	711001	14/F-4B
VMFA-232		LTCOL J. S. ROSENTHAL		318	1	C2	T	2	1	2	2	C1	710815	15/F-4J
VMCJ-1 (1ST MAW)	*	LTCOL S. S. EISENHAUER		391	1	C3	T	2	1	2	3	C3	710815	6/EA-6A, 9/RF-4B
MWSG-17		COL T. E. MULVIHILL	IWAKUNI			C3	R	2	2	3	2	C2	710801	
H&MS-17		LTCOL E. W. GILBERT		546	6	C3	R	2	2	3	2	C2	710901	5/C-117D, 3/C-54Q/R/S
WERS-17 (-)		MAJ A. L. FROCCI		225		C2	R	1	2	2	2	C1	710715	
OKINAWA (1ST MAW ELEMENTS)				3021	32									
MAG-36		COL R. J. ZITNIK	FUTEMA			C2	R	1	2	2	1	C2	710924	
H&MS-36 (-)		LTCOL D. A. SPURLOCK		589		C2	R	1	1	2	1	C1	710824	24/CH-46D, 3/UH-1E
SU 1, H&MS-36 (-)		CAPT J. A. WILDER		52		C2	S	1	2	2	1	C1	710730	
MABS-36		LTCOL V. J. GUINEE, JR.		521	24	C2	R	2	1	2	2	C1	710830	
MATCU-66 (MAG-36)	*	CAPT K. R. CLARK		56		C2	P	2	1	2	2	C2	710925	
MATCU-68 (MAG-36)	*	WO L. R. COXE		23		C4	P	4	1	4	4	C3	710924	
HMM-164 (31ST MAU)	2*	LTCOL A. J. KETTERING	31ST MAU	292	3	C2	R	1	1	2	1			13/CH-46D, 4/CH-53D, 4/UH-1E
HMM-165		MAJ D. M. GRIFFAY	FUTEMA	248	1	C3	R	1	2	3	1	C1	710710	20/CH-46D
HMH-462 (-)	2	LTCOL R. E. DYER		253	1	C2	R	1	1	2	1	C1	710901	16/CH-53D
VMO-6 (-)	28	LTCOL J. L. NORTON		206		C2	R	2	1	2	1	C1	710815	14/OV-10A
VMGR-152 (1ST MAW)	*	LTCOL R. W. DUPHINEY		289	1	C4	S	2	4	4	4	C3	710731	9/KC-130F
HML-367 (-)		MAJ R. SANCHO		172		C4	S	4	4	4	4	C3	710715	11/UH-1E, 21/AH-1G, 4/AH-1J
OTHERS														
DET, MASS-2 (-)			FUTEMA											
SU 1, WERS-17 (-)	12	WO E. O. HICKS		51		C3	S	1	3	3	1	C2	710727	
SU 1, H&MS-12 (-)	27	CAPT J. A. MILLER	NAHA	49		C2	S	1	2	2	2	C1	710730	
MACS-4		LTCOL R. D. MILER	FUTEMA	272	2	C3	P	2	1	2	3	C2	710611	
3D FSR		COL R. E. ROEDER	CP FOSTER	3080	50	C2	R	2	2	2	2	C2	710815	
H&S BN		LTCOL J. B. HARRIS, SR.		1005	24	C2	X	1	2	2	2	C1	710815	
SUPPLY BN		LTCOL J. W. FRIBERG		1164	26	C2	X	3	3	3	3	C2	710815	
NOP, 3D FSR (3D FSR)	*	CAPT C. W. SHIVER		45		C1		1	1	1	1			
MAINT BN		LTCOL H. I. FREY		866		C2	X	3	2	2	3	C2	710815	2/LVTE-1, 1/106MM RR, 1/81 MORT
EASTPAC				28816	854									
FMFPAC														
I MAF		BGEN R. T. DWYER, JR.	CAMPEN			C2	T	2	1	1	2	C2	710515	
H&SCO				21										
1ST MAR DIV (-) (REIN)		BGEN R. T. DWYER, JR.	CAMPEN	14244	515	C4	P	4	2	2	4	C3	710701	
HQBN		COL R. N. BURHANS		1735	60	C4	P	4	2	2	4	C4	711001	
1ST CIT		CAPT B. B. VORONIN		20		C1		1	1	1	1			
5TH ITT	14	CAPT R. A. KAROLY				C1		1	1	1	1			
9TH ITT	14	CAPT L. J. JANSEN				C1		1	1	1	1			
19TH ITT	14	CAPT J. A. LIPSCOMB				C3	P	3	1	1	3	C2	710930	
21ST ITT	14	CAPT R. R. WELPOTT				C1		1	1	1	1			
23D ITT	14	CAPT R. D. TOMLIN				C1		1	1	1	1			
25TH ITT	14	CAPT H. K. LEE				C2	R	1	1	2	1	C1	710801	
2D SSCT		WO E. L. MANEY		8		C4	R	1	1	4	1	C3	710901	
SCAMP		CAPT A. L. SELLECK, JR.		24										
COMM SPT CO, 9TH COMM BN (-)		CAPT D. B. DOWNING		299		C2	R	1	1	2	1	C2	711001	
DET, 5TH COMM BN (CADRE)	30													
1ST CIVIL AFFAIRS GRP		CAPT R. S. GRISCHKOWSKY		23		C4	P	4	1	1	1	C4	711001	
1ST MARINES		LTCOL M. A. MOORE				C4	X	3	4	4	3	C3	711001	
HQCO		CAPT H. W. GARDNER		189	10	C3	S	1	3	3	2	C2	711001	
1STBN		MAJ T. E. HEMINGWAY		1258	10	C4	R	3	3	4	3	C3	711001	9/106MM RR, 8/81 MORT
2DBN		LTCOL R. E. MOSS		1038	12	C4	S	2	4	3	2	C3	711001	8/106MM RR, 10/81 MORT
3DBN		MAJ N. H. SMITH		1037	27	C3	S	3	3	3	3	C2	711001	8/106MM RR, 8/81 MORT

* PARENTHETIC UNIT INDICATES OPCON WHEN DIFFERENT FROM ORGANIZATIONAL STRUCTURE.

Unclassified

[redacted]

UNCLASSIFIED

TAB 21-3

SE[redacted] UNCLASSIFIED

MARINE CORPS COMMAND CENTER

STATUS OF FMF UNITS**

14 JULY 1971

UNIT *	NOTE	UNIT COMMANDER	LOCATION	STRENGTH USMC	STRENGTH USN	UNIT READINESS☆ CURRENT RATE	RSN	P	S	R	T	EXPECTED RATE	BY	MAJOR EQUIPMENT
3D BN, 3D MARINES (CADRE)		MAJ D. J. O'CONNOR	CAMPEN	112	2	C4	N	5	4	4	5			7/106MM RR
5TH MARINES		LTCOL R. R. BURRITT	CAMPEN			C4	P	4	4	4	4	C4	711001	
HQCO		CAPT J. R. WILLIAMS		88	10	C4	P	4	4	3	4	C4	711001	
1ST BN		MAJ W. T. MACY		132	6	C4	N	4	4	4	4	C4	711001	1/106MM RR, 6/81 MORT
2D BN		MAJ J. A. LINNEMANN		120	4	C4	P	4	4	4	4	C4	711001	
3D BN		CAPT M. B. DARLING		139	7	C4	P	4	4	4	4	C4	711001	8/106MM RR, 8/81 MORT
7TH MARINES		COL A. A. MONTI	CAMPEN			C3	P	3	2	2	3	C3	710901	
HQCO		CAPT W. O. MOORE, JR.		220	8	C2	R	1	2	2	1	C1	710901	
1ST BN (CADRE)		MAJ R. C. HALL		409	7	C4	N	5	4	4	5			8/106MM RR, 8/81 MORT
2D BN		LTCOL T. L. SULLIVAN		1134	44	C2	T	1	1	1	2	C1	710801	8/106MM RR, 7/81 MORT
3D BN		LTCOL R. J. MILLE		1104	41	C2	T	1	1	1	2	C1	710901	8/106MM RR, 8/81 MORT
11TH MARINES (-)(REIN)		LTCOL B. F. OGDEN	CAMPEN			C4	P	4	3	4	4	C4	711001	
HQ BTRY		1STLT W. T. WILLIAMS		163		C4	P	4	4	4	4	C4	711001	
1ST BN		MAJ H. B. BROOKS III		627	1	C4	P	4	2	4	4	C4	711001	6/M-30 MORT, 12/105 HOW TD, 4/155 HOW TD, 1/81 MORT
2D BN (CADRE)		CAPT R. D. FULCHER		217	2	C4	N	4	4	4	4	C4	711001	
3D BN		MAJ W. A. HALL		657	18	C2	T	1	1	1	2	C1	711001	18/105 HOW TD
1ST MP BN		MAJ W. J. MC CALLUM	CAMPEN	45		C4	N	5	5	5	5			3/81 MORT
1ST MT BN (REIN)	23	CAPT E. R. WHITING		306	6	C3	R	1	2	3	2	C2	711001	
CO B, 9TH MT BN (-)		CAPT R. F. WILLIAMS		77	1	C2	X	3	1	1	3	C3	710801	
1ST RECON BN		MAJ H. C. COOPER, JR.		267	5	C4	N	4	2	3	4	C4	711001	
1ST FORCE RECON BN		CAPT D. L. COOK		71	3	C4	P	4	2	3	4	C4	711001	
1ST TANK BN (REIN)	18	MAJ G. E. BERBAUM		417	21	C4	P	4	2	2	4	C4	711001	5/M-51 VTR, 7/M-67 TANK, 15/M103 TANK, 25/M48 TANK
CO D, 3D TANK BN (-) (CADRE)														
1ST ENGR BN	26	MAJ H. L. SOLTER, JR.		480	5	C4	N	4	4	4	4	C4	711001	
7TH ENGR BN (-)(REIN)	11	MAJ C. N. WALL		382	14	C4	P	4	2	3	4	C4	711001	
1ST BRIDGE CO (-)(CADRE)		1STLT D. N. TAYLOR, JR.		52		C4	P	4	1	4	4	C4	711001	
1ST SP BN	8	LTCOL T. F. GRAY		247	17	C4	P	4	1	1	4	C4	711001	
3D AMTRAC BN (-)	19	MAJ J. P. SENIK		368	17	C4	P	4	2	2	4	C4	711001	5/LVTE-1, 8/LVTP-5 COMD, 70/LVTP-5, 3/LVTR
1ST SERV BN (REIN)	10	COL G. K. REID		732	33	C4	P	4	2	2	4	C4	710901	
1ST SEARCHLIGHT BTRY (CADRE)								5	5	5	5			
1ST MED BN (-)	7	LCDR D.K. LIVINGSTON(USN)		44	82	C4	P	4	4	3	4	C4	711001	
1ST DENTAL CO		CAPT J. F. KING (USN)		3	42	C4	R	4	3	4	4	C3	711001	
7TH SEP BULK FUEL CO(CADRE)								5	5	5	5			
FORCE TROOPS FMFPAC		BGEN P. G. GRAHAM	29 PALMS	1495	75	C4	X	4	2	3	3			
HQCO		MAJ E. L. ROTTSOLK		173	9	C1		1	1	1	1			
NOP, 1ST FSR		CAPT T. R. GERIES		49		C1		1	1	1	1			
9TH COMM BN (-)		LTCOL D. J. GARRETT		376	12	C4	P	4	2	2	3	C3	710901	
13TH CIT (FORTRPSPAC)	*	CAPT A. G. WILSON		16		C1		1	1	1	1			
21ST DENTAL CO (-)		CAPT G. W. WALTER (USN)		2	21	C4	S	1	4	4	1	C3	711001	
1ST FAG		LTCOL R. O. GILLICK		19		C4	P	4	2	3	4	C3	710802	
HQ BTRY, 1ST FAG		1STLT G. E. MAGGY		132	13	C2	T	1	1	1	2	C1	710802	
1ST 8" HOW BTRY SP (-)		CAPT J. P. FARRELL		136		C3	P	3	2	3	3	C2	710901	1/M-51 VTR, 4/8" HOW SP
1ST 175MM GUN BTRY SP		CAPT M. T. OWENS, JR.		65		C4	P	4	2	4	4	C3	710802	1/M-51 VTR, 6/175 GUN SP
3D 175MM GUN BTRY SP		CAPT D. L. ROSENBERG		94		C4	P	4	3	4	4	C3	710802	1/M-51 VTR, 6/175 GUN SP
4TH BN, 11TH MAR (1ST FAG)	*	LTCOL D. W. SANFORD		304	2	C4	R	4	3	4	4	C3	710802	1/M-51 VTR, 26/155 HOW SP
CO A (REIN), 7TH ENGR BN(-)		CAPT P. A. PANKEY	ENROUTE 29 PALMS	107		C4	P	4	1	2	3	C3	710802	
3D HOSPITAL CO (CADRE)		LT W. L. NICHOLS (USN)	29 PALMS	22	18	C4	X	4	4	3	4			

* PARENTHETIC UNIT INDICATES CPCON WHEN DIFFERENT FROM ORGANIZATIONAL STRUCTURE.

Unclassified

TAB 21-4

UNCLASSIFIED [redacted]

[redacted] UNCLASSIFIED

MARINE CORPS COMMAND CENTER

STATUS OF FMF UNITS**

14 JULY 1971

UNIT *	NOTE	UNIT COMMANDER	LOCATION	STRENGTH USMC	STRENGTH USN	UNIT READINESS CURRENT RATE	RSN	P	S	R	T	EXPECTED RATE	BY	MAJOR EQUIPMENT
3D MAW		BGEN L. E. BROWN	EL TORO	11492	220	C3	T	3	2	3	3	C2	711030	
MWHS-3		LTCOL H. E. SEXTON		663	122	C2	P	2	2	2	2	C1	710930	
6TH CIT		CAPT W. C. HOWEY		14		C1		1	1	1	1			
4TH SSCT		CAPT H. G. WHITE		9		C1		1	1	1	1			
13TH FORCE DENTAL CO		CAPT J. R. EUBANK (USN)	EL TORO		40	C4	P	4	1	1	1	C3	710915	
MWSG-37		LTCOL F. R. SMOKE	EL TORO			C3	X	4	3	3	3	C2	711001	
H&MS-37 (-)		MAJ L. K. WARN		507	1	C3	P	3	2	2	2	C1	711001	4/C-117D, 2/C-54P/Q
SU 1, H&MS-37 (-)		MAJ L. C. WALLACE, JR.		51		C2	P	2	1	1	1	C1	711001	
WERS-37		LTCOL H. PALLAI		213		C3	P	3	2	2	2	C2	711030	
VMGR-352 (3D MAW)	*	LTCOL G. L. CARLSON		251	1	C3	X	4	2	2	4	C2	711001	10/KC-130F
MACG-38		COL J. W. DRURY	EL TORO			C2	S	2	2	2	2	C1	711030	
H&HS-38 (-)		MAJ D. E. T. WILSON		310		C2	R	1	2	2	2	C1	710930	
SU 1, H&HS-38 (-)		MAJ E. D. CHANEY, JR.		67		C3	T	2	2	2	3	C2	710930	
1ST REDEYE PLAT		1STLT K. E. ROWE		38		C2	R	2	1	2	1	C1	710801	
3D REDEYE PLAT		1STLT J. B. DOWLING		34		C2	R	2	1	2	1	C1	710701	
2D LAAM BN		LTCOL R. D. FOSTER	YUMA	641	5	C2	X	3	1	2	2	C1	710801	
MACS-7		LTCOL J. O. GREGERSON	CAMPEN	186	2	C2	P	2	2	2	2	C1	710901	
MACS-1 (-)		MAJ W. H. ALLEN	YUMA	198	2	C3	T	2	2	2	3	C2	710901	
SU 1, MACS-1 (-) (NWU)		CAPT H. POSTHUMA		65		C1		1	1	1	1			
MWCS-38		MAJ W. T. CHWATEK	EL TORO	174		C2	R	1	1	2	1	C1	710930	
MAG-11		COL L. J. STIEN	EL TORO			C4	P	4	4	4	4	C3	710730	
H&MS-11		LTCOL H. N. LEVIN		356	1	C4	P	4	4	4	4	C3	710730	2/C-117D, 4/OV-10A, 3/TA-4F
MABS-11		LTCOL C. L. COMFORT		373	16	C4	P	4	4	4	4	C3	710730	
MAG-13		COL D. R. DAVIS	EL TORO			C4	T	4	3	4	4	C3	710930	
H&MS-13		LTCOL C. C. NEWMARK		692	1	C2	P	2	1	1	2	C1	710930	13/A-6A, 8/F-4B, 5/TA-4F
MABS-13		MAJ J. DERMODY		510	2	C2	P	2	2	1	1	C2	710930	
MASS-3		LTCOL V. J. FULLADOSA		103		C4	P	4	1	1	2	C1	710801	
MATCU-65 (MAG-13)	*	CAPT D. M. TARBET	YUMA	65		C4	P	4	1	1	4	C3	710930	
MATCU-67 (MAG-13)	*	1STLT J. HANCOCK	EL TORO	22		C4	P	4	1	4	4	C3	710930	
MATCU-77 (CADRE)(MAG-13)	*							5	5	5	5			
VMA-214		LTCOL J. J. MCCARTHY		177		C2	X	3	2	2	3	C2	711030	16/A-4F
VMA-223		MAJ A. OSEGUERA		161	1	C4	P	4	2	3	3	C3	710930	6/A-4F
VMA(AW)-225		LTCOL J.A. MANZIONE, JR.		51		C4	N	5	4	4	5			
VMA(AW)-242		LTCOL M. S. NEWBILL		154	1	C4	S	4	4	4	4	C3	710713	7/A-6A
VMFA-314		MAJ A. J. BARTEL		36		C4	N	5	4	4	5			
VMFA-323		MAJ T. G. LEACH		200		C4	P	4	2	4	4	C3	710930	14/F-4B
VMFA-334		MAJ G. PSAROS				C4	N	4	4	4	4			
VMFA-531		LTCOL R. HUTCHINSON		240		C2	X	3	2	1	3	C2	710930	14/F-4B
VMCJ-3		LTCOL M. W. DINNAGE		297	1	C4	P	4	1	2	3	C3	710930	10/RF-4B, 2/EA-6A
MAG-56		COL G. L. LILICH	SANTA ANA			C3	P	3	2	2	2	C2	710930	
H&MS-56 (-)		LTCOL G. H. DUNN		377		C2	P	2	2	2	2	C2	710930	13/CH-53A, 6/UH-1E, 12/OV-10A
SU 1, H&MS-56 (-)		MAJ G. W. LEE	CAMPEN	131		C1		1	1	1	1			
MABS-56		MAJ B. G. WILKISON	SANTA ANA	416		C4	P	4	2	2	2	C3	710930	
MATCU-74 (H&MS-56 (-))	*	CAPT G. N. BROWN		47		C4	P	4	1	1	2	C3	710801	
MATCU-75 (H&MS-56 (-))	*	CAPT P. D. HAYNES	CAMPEN	30		C4	P	4	2	2	3	C3	710930	
HML-267		LTCOL J. M. MORIARTY		326	10	C3	R	2	1	3	2	C2	710930	22/UH-1E, 10/OV-10A
VMO-2		MAJ D. A. CAYLOR		46	1	C4	N	4	4	4	4			
HMM-161		LTCOL B. L. LADD	SANTA ANA	187		C3	P	3	3	2	2	C2	710930	16/CH-46D
HMM-163		LTCOL F. A. MATHEWS		198	1	C2	P	2	1	1	1	C1	710910	21/CH-46F
HMH-361		MAJ R. F. CAPTOR		149		C4	P	4	3	4	4	C3	710930	10/CH-53A
HMH-363		LTCOL A. F. RIBBECK		180		C2	X	3	3	2	2	C2	710930	14/CH-53A
MAG-16	29	COL L. C. STREET III	SANTA ANA											
H&MS-16	29	MAJ D. R. BOWEN		251		C3	P	3	1	3	1	C4	710720	5/CH-46D
MABS-16	29	MAJ C. D. DEPIETRO		353		C4	P	4	4	4	4	C2	710802	

* PARENTHETIC UNIT INDICATES OPCON WHEN DIFFERENT FROM ORGANIZATIONAL STRUCTURE.

IAB 21-5

Unclassified

[redacted] UNCLASSIFIED

[redacted]UNCLASSIFIED

MARINE CORPS COMMAND CENTER

STATUS OF FMF UNITS **

14 JULY 1971

UNIT *	NOTE	UNIT COMMANDER	LOCATION	STRENGTH USMC	STRENGTH USN	UNIT READINESS ✡ CURRENT RATE	RSN	P	S	R	T	EXPECTED RATE	BY	MAJOR EQUIPMENT
MHTG-30		COL R. BIANCHI	SANTA ANA			C2	R	1	1	2	1	C1	710901	
H&MS-30		MAJ D. G. DUNLAP		290	1	C1		1	1	1	1			5/CH-46F, 3/CH-53A
HMHT-301		MAJ D. A. DALRYMPLE		171		C2	P	2	2	1	1	C1	710901	8/CH-53A
HMMT-302		LTCOL R. G. RITCHIE		188		C1		1	1	1	1			16/CH-46F
MCCRTG-10		COL R. B. SINCLAIR	YUMA			C2	S	1	2	2	1	C2	710630	
H&MS-10		MAJ G. R. CALLISON		424	6	C1		1	1	1	1			
VMFAT-101		LTCOL T. R. MOORE		375	4	C3	R	1	3	3	1	C2	711030	22/F-4B
VMAT-102		LTCOL R. D. REID		281		C2	S	2	2	2	1	C1	711001	26/A-4E
VMT-103		MAJ B. H. FREEMAN		212	3	C2	R	1	2	2	1	C1	710930	16/TA-4F, 2/TA-4J
1ST FSR		COL H. C. REED	CAMPEN	1564	44	C3	P	3	2	2	3	C2	711001	2/106MM RR, 1/155 HOW TD
H&SBN		MAJ R. E. JOHNSON		408	23	C3	P	3	2	2	3	C2	711001	
SUPPLY BN		LTCOL E. R. PUCKETT		633	21	C3	P	3	2	2	3	C2	711001	
MAINT BN		LTCOL E. E. CREWS		523		C3	P	3	2	2	3	C2	711001	
EAST COAST														
FMFLANT		LTGEN E. E. ANDERSON	NORFOLK	38863	1044	C1		1	1	1	1			
HQ FMFLANT				805	4									
H&SBN		COL L. H. DEVINE		726	4	C2	P	2	1	1	2	C1	710601	
HQ SQDN		LTCOL D. PRUDHOMME		79		C4	N	5	5	5	5			
2D MAR DIV		BGEN R. D. BOHN	CAMLEJ	16407	650	C2	P	2	1	1	2	C3	710930	
HQBN		COL G. R. HERSHEY		1892	39	C2	R	1	1	2	1	C1	710830	
2D ITT	20	MSGT R. L. GONYO												
4TH ITT	20	WO G. L. ANDERSON												
6TH ITT	20	2DLT R. L. LAMBERT												
SCAMP	20													
2D MARINES		COL C. B. REDMAN	CAMLEJ			C2	P	2	1	1	2	C1	710831	
HQCO		CAPT G. W. SCHLITZ		261	5	C1		1	1	1	1			
1ST BN	15	LTCOL A. M. GRAY		1100	18	C3	T	1	1	1	3	C2	710730	8/106MM RR, 8/81 MORT
2D BN		LTCOL M. ROJO, JR.		927	19	C3	P	3	1	1	3	C2	710930	8/106MM RR, 8/81 MORT
3D BN (-) (32D MAU)	5*	LTCOL T. J. WILLIS	MED	945	33	C1		1	1	1	1			8/106MM RR, 8/81 MORT
SU 1, H&SCO, 3D BN (2D MAR)	*	1STLT J. R. LOWEY	CAMLEJ	23		C4	N	5	5	5	5			
6TH MARINES		COL F. R. KRAINCE	CAMLEJ			C2	P	2	1	1	2	C1	710831	
HQCO		CAPT R. J. SNOWDEN		309	6	C1		1	1	1	1			
1ST BN (-)	6	LTCOL T. F. QUALLS		849	33	C2	P	2	1	1	1	C1	710930	8/106MM RR, 8/81 MORT
CO A, 1ST BN (-)		MAJ J. D. FOREMAN		252	6									
2D BN		MAJ J. F. DELANEY		860	13	C2	P	2	1	1	2	C1	710831	8/106MM RR, 8/81 MORT
3D BN		MAJ S. B. WANNER		997	34	C3	P	3	1	1	1	C2	710930	8/106MM RR, 8/81 MORT
8TH MARINES		COL E. M. YOUNG	CAMLEJ			C2	P	2	1	1	1	C1	710930	
HQCO		1STLT H. L. SAWYER		271	14	C1		1	1	1	1			
1ST BN		LTCOL M. H. IVINS		1004	25	C3	P	3	1	1	2	C2	710930	8/106MM RR, 8/81 MORT
2D BN (-)	9	LTCOL D. O. PAREDES	GTMO	761	26	C2	P	2	1	1	1	C1	710930	8/106MM RR, 8/81 MORT
CO E, 2D BN		CAPT C. Q. KELLER	CAMLEJ	194	4	C4	N	5	5	5	5			
3D BN	13	LTCOL W. H. RICE		999	27	C3	P	3	1	1	1	C2	710930	8/106MM RR, 8/81 MORT
10TH MARINES		COL C. A. WEBSTER	CAMLEJ			C4	P	4	1	1	2	C3	710930	
HQ BTRY		1STLT R. R. HARRIS		275	3	C1		1	1	1	1			
1ST BN		MAJ B. A. MUTCH		461	12	C3	P	3	1	1	1	C2	710930	18/105 HOW TD
2D BN		MAJ J. W. ROSS		388	10	C4	P	4	1	1	2	C3	710930	18/105 HOW TD
3D BN		LTCOL D. E. COOMBE		400	8	C4	P	4	1	1	2	C3	710930	18/105 HOW TD
4TH BN		LTCOL R. W. HEESCH		298	7	C4	P	4	1	1	2	C3	710930	1/M51 VTR, 18/155 HOW SP

✡ PARENTHETIC UNIT INDICATES OPCON WHEN DIFFERENT FROM ORGANIZATIONAL STRUCTURE.

Unclassified

[redacted]UNCLASSIFIED

TAB 21-6

6

UNCLASSIFIED

MARINE CORPS COMMAND CENTER

STATUS OF FMF UNITS**

14 JULY 1971

UNIT *	NOTE	UNIT COMMANDER	LOCATION	STRENGTH USMC	STRENGTH USN	UNIT READINESS☆ CURRENT RATE	RSN	P	S	R	T	EXPECTED RATE	EXPECTED BY	MAJOR EQUIPMENT
2D SERV BN		COL S. DAVIS	CAMLEJ	948	21	C2	P	2	1	1	2	C1	710930	
2D MT BN		LTCOL W. S. GERICHTEN		264	5	C2	P	2	1	1	1	C1	710930	
2D ENGR BN		MAJ W. W. WIDENER		641	11	C3	P	3	1	1	3	C2	710930	
2D RECON BN		MAJ G. E. STRICKLAND		441	15	C2	T	1	1	1	2	C1	710831	
2D SP BN		MAJ R. J. KENWORTHY		493	13	C2	P	2	1	1	2	C1	710930	
2D MED BN		LCDR S. STEVENSON (USN)		154	179	C4	P	4	2	2	2	C3	710831	
2D DENTAL CO		CAPT A. P. GIAMMISSO (USN)			64	C2	R	2	1	1	1	C1	710930	
FORTPS, FMFLANT		BGEN J. C. FEGAN	CAMLEJ	5166	146	C2	P	2	1	1	2	C2	711001	
HQCO		MAJ R. M. OTTERAAEN		474		C1		1	1	1	1			
2D CIT		1STLT R. H. OSBON, JR.		16		C1		1	1	1	1			
5TH CIT			ENROUTE CAMLEJ											
2D FAG		COL W. W. HIXSON	CAMLEJ			C3	T	2	1	1	3	C2	710901	
HQ BTRY, 2D FAG		CAPT D. M. JORDAN		157	5	C1		1	1	1	1			
2D 8" HOW BTRY SP		MAJ G. E. GAUMONT, JR.		160		C2	X	3	1	1	2			1/M51 VTR, 6/8" HOW SP
2D 175MM GUN BTRY		MAJ L. D. VOGLER		119		C3	P	3	1	2	3	C2	710901	1/M51 VTR, 6/155 GUN SP, 6/175 GUN SP
5TH 175MM GUN BTRY SP		MAJ R. R. WRIGHT		147		C2	T	2	1	1	2	C1	710830	1/M51, 6/175 GUN SP
2D TANK BN (-)	25	LTCOL F. E. GRUBE	CAMLEJ	664	12	C3	P	3	1	1	3	C2	711001	17/M103 TK, 53/M48 TK, 5/M51 VTR, 9/M67 TK
2D AMTRAC BN (-)	21	MAJ E. E. GERDING		766	14	C4	P	4	1	1	4	C3	710901	4/LVTE-1, 11/LVTP-5 COMD, 142/LVTP-5, 4/LVTR
8TH COMM BN		LTCOL R. E. HAISLIP		625	9	C2	P	2	1	2	1	C2	710901	
8TH ENGR BN		LTCOL B. A. KAASMANN		714	13	C4	P	4	2	1	3	C2	710728	
8TH MT BN		LTCOL C. W. TONNACLIFF		323	4	C2	P	2	1	1	2	C1	710728	
2D RADIO BN		LTCOL J. T. BRASSFIELD		344	4	C3	P	3	1	2	2	C2	710801	
2D ANGLICO		LTCOL D. E. SCHNEIDER		277	12	C3	T	2	1	1	3	C2	710930	
2D FORCE RECON CO		MAJ B. A. GREENE		138	3	C3	T	1	1	1	3	C2	710825	
2D TOPO CO		WO J. F. MCGRORY		83	1	C3	P	3	1	1	3	C2	710901	
2D BRIDGE CO		1STLT D. C. BELL		121	1	C3	P	3	1	1	3	C2	710901	
2D HOSPITAL CO		LT J. T. LEWIS (USN)		30	21	C4	P	4	1	1	4	C3	710901	
22D DENTAL CO		CAPT W.H.HAGERMAN (USN)		5	36	C4	P	4	1	1	1	C2	710901	
2D SEP SURG CO (CADRE)		LCDR G. H. ASHTON (USN)		3	11	C4	N	5	5	5	5			
9TH SEP BULK FUEL CO (CADRE)														
2D MAW**		MAJGEN G. C. AXTELL	CHERPT	14382	217	C2	X	2	2	2	3	C2	711231	
MMHS-2		COL D. G. SWINFORD		688	23	C1		1	1	1	1			
12TH FORCE DENTAL CO		CAPT J. H. SMITH		1	51	C3	P	3	1	1	1	C2	710901	
8TH CIT		WO E. J. JOHNSTON		18		C1		1	1	1	1			
6TH SSCT		1STLT V. E. STROTE	--	7		C2	R	1	1	2	1	C1	711001	
MATCU-78 FMFLANT)	*	CAPT E. P. BASHER	QUANTICO	45		C3	X	4	1	2	4	C4	710731	
MWSG-27		LTCOL W. L. RICE	CHERPT			C3	P	3	1	2	2	C3	710801	
H&MS-27 (-)		LTCOL E. J. HEISE		724	10	C2	P	2	1	1	2	C1	711209	5/C-117D, 1/C-54S
SU 1, H&MS-27 (-)		CAPT K. D. MCCURRY		42		C1		1	1	1	1			
WERS-27		MAJ R. C. BAGLEY, JR.		195		C3	P	3	1	1	2	C2	711208	
VMGR-252 (2D MAW)	*	LTCOL U. V. STATZER		336	2	C3	X	3	2	2	4	C3	710901	11/KC-130F
MACG-28		COL J. W. LASETER	CHERPT			C2	P	2	2	2	2	C2	710809	
H&MS-28		MAJ E. S. OLIN		269	2	C2	T	2	1	1	2	C2	710723	
MASS-1		MAJ H. F. SAEGER		171		C3	P	3	1	1	2	C2	710930	
2D REDEYE PLAT		1STLT A. W. HEATH		35		C2	P	2	1	1	2	C2	710930	
MACS-5		MAJ J. R. THROGMORTON	BEAUFORT	222		C2	P	2	2	2	2			
MACS-6		MAJ A. M. YOUNGER	CHERPT	243		C3	T	2	2	2	3	C3	710801	
3D LAAM BN		LTCOL J. C. DIXON		555	9	C3	P	3	2	2	2	C3	710820	
MWCS-28		MAJ L. J. MITCHELL		188		C3	P	3	1	2	2	C4	710715	
MCCRTG-20		COL T. G. ELDER	CHERPT			C2	T	1	2	2	2	C3	710715	
H&MS-20		LTCOL R. C. BARRETT		602	2	C2	X	1	1	2	3	C1	710901	
VMFAT-201		LTCOL R. H. SCHULTZ		347	3	C3	X	3	1	2	4	C3	710815	4/F-4B, 25/F-4J
VMAT(AW)-202		LTCOL C. G. LAWSON		307	3	C4	R	2	2	4	3	C4	710715	14/A-6A, 3/TC-4C
VMT-203		LTCOL S. M. WILLIAMS		181	3	C3	T	2	1	1	3	C4	710715	19/TA-4F, 5/TA-4J

1 PARENTHETIC UNIT INDICATES OPCON WHEN DIFFEFENT FROM ORGANIZATIONAL STRUCTURE.

TAB 21-7

Unclassified
UNCLASSIFIED

[redacted] UNCLASSIFIED

MARINE CORPS COMMAND CENTER

STATUS OF FMF UNITS**

14 JULY 1971

UNIT*	NOTE	UNIT COMMANDER	LOCATION	STRENGTH USMC	STRENGTH USN	UNIT READINESS☆ CURRENT RATE	RSN	P	S	R	T	EXPECTED RATE	BY	MAJOR EQUIPMENT
MHTG-40		COL R. B. ENGESSER	NEW RIVER			C1		1	1	1	1			
H&MS-40		MAJ J. P. KIZER		267	1	C1		1	1	1	1			
HMHT-401		LTCOL H. D. GRESS, JR.		124		C1		1	1	1	1			10/CH-53D
HMMT-402		LTCOL J. L. FELTER		163		C1		1	1	1	1			19/CH-46F
MAG-14		COL W. R. NOWAINICK	CHERPT			C3	X	3	2	2	4	C2	710801	
H&MS-14		LTCOL J. D. DUNN		646		C2	P	2	1	1	2	C2	711001	1/A-6A, 2/EA-6A, 6/F-4B, 4/TA-4F
MAB-14 (-)		MAJ C. M. DOYLE		309	9	C3	P	3	1	2	1	C3	711001	
SU 1, MABS-14 (-)		MAJ B. L. MEEK	BOGUE, NC	231		C1		1	1	1	1			
MATCU-61		CAPT G. P. HAYES		60		C2	P	2	1	1	2	C2	710715	
VMCJ-2 (-)		LTCOL J. L. GREEN	CHERPT	355	3	C2	R	1	1	2	2	C2	711001	14/EA-6A/ 9/RF-4B
DET 60, VMCJ-2 (6THFLT)	*16		USS SARATOGA	143	1	C1		1	1	1	1			4/EA-6A
VMA(AW)-121		MAJ E. A. BIRZER	CHERPT	193	1	C3	P	3	1	3	2	C2	710801	11/A-6A
VMA(AW)-224		LTCOL B. R. STANDLEY		281	3	C3	P	1	1	3	2	C2	710616	12/A-6A
VMA(AW)-332		LTCOL P. R. JONES, JR.		180	2	C2	P	2	1	1	2	C1	710831	11/A-6A
VMFA-312		MAJ R. G. KROPP		181		C4	P	4	2	3	4	C4	711001	7/F-4B
DET 14, 2D MAW (NAS, KEY WEST)	*		KEY WEST	84		C1		1	1	1	1			3/F-4B
MAG-26		COL G. R. HUNTER	NEW RIVER			C1		1	1	1	1	C1	7107020	
H&MS-26		MAJ C. E. CANNON		586		C2	X	2	1	1	1	C2	710721	31/CH-46F, 17/CH-53A, 11/CH-53D
MABS-26		MAJ Z. V. LAMASCUS		477	44	C4	P	4	1	1	1	C4	710901	
MATCU-64 (MAG-26)	*	CAPT D. V. ESMOND		42		C4	P	4	1	2	3	C3	710915	
VMO-1		LTCOL R. D. MYERS		188		C3	P	3	2	3	1	C3	710806	16/OV-10A
HMA-269		LTCOL L. W. SMITH		243		C4	T	4	1	1	4	C2	710901	26/AH-1J, 6/UH-1E, 10/UH-1N
HML-167		LTCOL H. S. LOWREY												
HMM-162 (2D MAU)	*5	LTCOL J. W. ALBER	32D MAU	237	3	C1		1	1	1	1			10/CH-46F, 4/CH-53D, 2/UH-1E
HMM-261		MAJ D. R. ALLEN, JR.	NEW RIVER	269		C2	R	1	1	2	1	C2	710901	23/CH-46F
HMM-263		LTCOL V. W. HAZELBAKER	QUANTICO			C4	N	5	5	5	5			20/CH-46D, 4/CH-46F
HMM-264		MAJ R. K. GOFORTH	NEW RIVER	264		C1		1	1	1	1			28/CH-46F
HMH-362		MAJ R. F. WILEY		185		C2	R	1	1	2	1	C2	710901	16/CH-53D
HMH-461		LTCOL D. E. WEBB		193		C1		1	1	1	1	C2	710801	1/CH-53A, 16/CH-53D
MAG-31		COL N. B. MCCRARY	BEAUFORT			C3	P	3	1	2	3	C2	710711	
H&MS-31		MAJ G. B. FERRINGTON		671		C3	R	2	1	3	2	C3	710815	1/C-117D, 2/F-4B, 4/F-4J, 3/TA-4F
MABS-31		MAJ J. L. CUNNINGHAM		328	18	C3	P	3	1	1	3	C3	710903	
MATCU-69		CAPT W. T. FARROW		39		C4	P	4	1	1	4	C4	710731	
VMFA-251		MAJ J. M. MEAD		274	1	C3	T	2	1	2	3	C2	710801	13/F-4B, 7/F-4J
VMFA-333 (CVA-66)	*3	LTCOL R. PLANT	USS AMERICA	303	1	C2	R	1	2	2	2			11/F-4J
VMFA-451		LTCOL R. J. WEISS	BEAUFORT	267	1	C3	T	3	1	3	3	C2	710930	18/F-4J
MAG-32		COL H. HUNTER, JR.	BEAUFORT			C2	X	2	2	3	3	C2	710813	
H&MS-32		MAJ R. L. UPCHURCH		519		C2	X	3	2	2	2	C2	710801	1/C-117D, 5/TA-4F
MABS-32		MAJ H. R. PALMATEER		386	17	C2	P	2	1	2	1	C2	710805	
MATCU-63		1STLT M. M. HENDERSON		36		C3	X	4	1	2	2	C3	710805	
VMA-324		LTCOL G. J. ERTLMEIER		179	1	C2	X	2	2	2	3	C2	710730	5/A-4E, 12/A-4M
VMA-331		LTCOL P. E. BROOKSHIRE		174	1	C4	R	2	1	4	2	C3	710722	20/A-4E
VMA-513		LTCOL C. M. BAKER		132	2	C4	T	4	3	2	4	C3	711101	6/AV-8A
2D FSR		COL E. C. DRESBACH, JR.	CAMLEJ	2103	27	C3	P	3	1	2	3	C4	711001	
H&SBN		LTCOL J. B. CANTIENY		609	19	C3	P	3	2	2	3	C2	710801	
SUPPLY BN		LTCOL D. J. BEARD		751	8	C4	P	4	1	1	4	C4	711001	
MAINT BN		LTCOL C. L. BOOTH		743		C3	P	3	1	1	3	C4	711001	1/LVTP-5, 3/LVTR, 1/M103 TK, 1/M48 TK, 4/M51 VTR, 1/M67 TK

* PARENTHETIC UNIT INDICATES OPCON WHEN DIFFERENT FROM ORGANIZATIONAL STRUCTURE.

Unclassified

TAB 21-8

[redacted] UNCLASSIFIED

UNCLASSIFIED

MARINE CORPS COMMAND CENTER

STATUS OF FMF UNITS**

14 JULY 1971

UNIT	NOTE	UNIT COMMANDER	LOCATION	STRENGTH		UNIT READINESS								MAJOR EQUIPMENT
						CURRENT						EXPECTED		
				USMC	USN	RATE	RSN	P	S	R	T	RATE	BY	

UNIT READINESS RATING CATEGORY

C-1 FULLY COMBAT READY
C-2 SUBSTANTIALLY COMBAT READY
C-3 MARGINALLY COMBAT READY
C-4 NOT COMBAT READY

READINESS ABBREVIATIONS

P PERSONNEL READINESS
S SUPPLIES/EQUIPMENT ON HAND
R EQUIPMENT READINESS
T TRAINING READINESS
X COMMANDERS SUBJECTIVE JUDGEMENT
N RESOURCE ALLOCATION BY COGNIZANT SERVICE DOES NOT PERMIT A HIGHER C-RATING

NOTES

1. BLT 3/4 BREAKDOWN ON TAB 34.
2. 31ST MAU BREAKDOWN ON TAB 34.
3. ABOARD USS AMERICA (CVA-66). ENR MED ETA 15JUL71.
4. ASSIGNED III MAF
5. LANFOR6THFLT 1-71 (32D MAU) BREAKDOWN ON TAB 36.
6. LANFORCARIB 1-71 BREAKDOWN ON TAB 36.
7. CO A, 1ST MED BN ETA CAMPEN 18JUL71.
8. H&SCO, CO B, 1ST SP BN IN CADRE STATUS.
9. GTMO BN (REIN) BREAKDOWN ON TAB 36-2.
10. TRUCK CO, 1ST SERV BN (CADRE).
11. CO C, 7TH ENGR BN (CADRE). CO A, 7TH ENGR BN ENROUTE CAMPEN. ETA 18JUL71.
12. THIS UNIT IS BOTH ADCON/OPCON TO WERS-17 (-).
13. AIR ALERT BATTALION.
14. PERSONNEL AND EQUIPMENT CARRIED IN HQBN, 1ST MARDIV.
15. VIEQUES TRNG (DET, H&SCO, CO A, 1/2).
16. ABOARD USS SARATOGA (CVA-60).
17. INCLUDES STRENGTH CO D, 7TH ENGR BN AND 1ST PLAT, 1ST BRIDGE CO.
18. H&SCO, CO B, CO C, AND CO D, 1ST TANK BN (CADRE).
19. H&SCO, CO B, AND CO C, 3D AMTRAC BN (CADRE).
20. PERSONNEL AND EQUIPMENT CARRIED IN HQBN, 2D MARDIV.
21. ONE PLATOON IS DEPLOYED WITH LANFOR6THFLT 1-71 AND ALSO ONE PLATOON WTIH LANFORCARIB 1-71.
22. PERSONNEL AND EQUIPMENT CARRIED IN HQBN, 3D MARDIV.
23. STRENGTH INCLUDES DET, H&SCO, AND CO A, 1ST MT BN.
24. SANGLEY AUGMENTATION FORCE (DET, 4TH MARINES w/1 OFF AND 121 ENL) AT SANGLEY PT, R.P.I.
25. ONE PLATOON IS DEPLOYED WITH LANFOR6THFLT 1-71, ONE PLATOON WITH LANFORCARIB 1-71 AND ONE PLATOON WITH THE GTMO BN.
26. STRENGTH INCLUDES DET, H&SCO, DET, ENGR SPT CO, AND CO A, 1ST ENGR BN.
27. THIS UNIT IS BOTH ADCON/OPCON TO MAG-12, HOWEVER, IS PHYSICALLY LOCATED ON OKINAWA WITH THEIR STRENGTH CARRIED UNDER OKINAWA.
28. FOUR OFFICERS AND 15 ENLISTED ATTACHED TO VAL-4 FOR EVALUATION OF YOV-10D.
29. EQUIPMENT AND PERSONNEL REDEPLOYED FROM RVN ON 20JUN71 AND ARE SCHEDULED TO ARRIVE SANTA ANA ON 17JUL71.
30. DET, 5TH COMM BN STRENGTH INCLUDED IN COMM SPT CO, 9TH COMM BN (-).

** SOURCE: MARES FORSTAT REPORT DATED 7 JULY 1971.

UNCLASSIFIED

TAB 21-9

Unclassified

UNCLASSIFIED [redacted]

MARINE CORPS COMMAND CENTER

RECAPITULATION OF FMF ACTUAL STRENGTHS *

PACIFIC

14 JULY 1971

UNIT	GROUND		AIR		GRAND TOTAL	
	USMC	USN	USMC	USN	USMC	USN
FMFPAC						
MIDPAC						
HQ, FMFPAC	980	36	67		1,047	36
1ST MAR BDE	2,021	84	1,875	25	3,896	109
OTHER	772	13			772	13
TOTAL MIDPAC	3,773	133	1,942	25	5,715	158
WESTPAC						
III MAF (OKINAWA)						
HQ, III MAF	131				131	
3D MARDIV (-) (REIN)	14,525	580			14,525	580
1ST MAW			3,021	32	3,021	32
3D FSR	3,080	50			3,080	50
TOTAL III MAF (OKINAWA)	17,736	630	3,021	32	20,757	662
III MAF (JAPAN)						
1ST MAW			5,830	107	5,830	107
TOTAL III MAF (JAPAN)			5,830	107	5,830	107
LANFOR 7TH FLT						
31ST MAU	1,420	63	353	3	1,773	66
BLT 3/4	1,417	66	17		1,434	66
(1) **TOTAL LANFOR 7TH FLT**	2,837	129	370	3	3,207	132
TOTAL III MAF	17,736	630	8,851	139	26,587	769
TOTAL WESTPAC	17,736	630	8,851	139	26,587	769
EASTPAC						
HQ, I MAF	21				21	
1ST MARDIV (-) (REIN)	14,244	515			14,244	515
FORTRPS, FMFPAC	1,495	75			1,495	75
3D MAW			11,492	220	11,492	220
1ST FSR	1,564	44			1,564	44
TOTAL EASTPAC	17,324	634	11,492	220	28,816	854
TOTAL FMFPAC	38,833	1,397	22,285	384	61,118	1,781

ATLANTIC

EAST COAST						
FMFLANT						
HQ, FMFLANT	726	4	79		805	4
2D MARDIV	16,407	650			16,407	650
FORTRPS, FMFLANT	5,166	146			5,166	146
2D MAW			14,382	217	14,382	217
2D FSR	2,103	27			2,103	27
TOTAL EAST COAST	24,402	827	14,461	217	38,863	1,044
CARIBBEAN						
GTMO BN (REIN)	1,001	34			1,001	34
LANFORCARIB 1-71	1,190	48			1,190	48
(2) **TOTAL CARIBBEAN**	2,191	82			2,191	82
MEDITERRANEAN						
LANFOR6THFLT 1-71 (32 MAU)	1,472	69	238	3	1,710	72
(2) **TOTAL MEDITERRANEAN**	1,472	69	238	3	1,710	72
TOTAL FMFLANT	24,402	827	14,461	217	38,863	1,044
TOTAL FMF	63,235	2,224	36,746	601	99,981	2,825

NOTES
(1) STRENGTH INCLUDED IN III MAF OKINAWA.
(2) STRENGTH INCLUDED IN EAST COAST.

* SOURCE: MARES FORSTAT REPORT DATED 7JUL71.

UNCLASSIFIED

Unclassified

[redacted]

TAB 22

UNC[redacted]IFIED

MARINE CORPS COMMAND CENTER

FLEET MARINE FORCE DISPOSITION

14 JULY 1971

(6) 7TH MAB
HQ, 7TH MAB
7TH MARINES
PROV MAG-50
AT CAMPEN

(7) CHINA LAKE TRNG
DET, VMA-324
(6/A-4E A/C)
(10-23JUL71)

(8) 8TH MAB
HQ, 8TH MAB
34TH MAU
PROV MAG-40
AT CAMLEJ

VMFA 333 ABOARD (3)
USS AMERICA (CVA-66)
ENROUTE MED
ETA 15JUL71

LANFOR6THFLT 1-71 (2)
32D MAU
BLT 3/2
HMM-162
AT KUSADASI, TURKEY
ETD 14JUL71

SANGLEY AUGMENTATION FORCE
DET, 4TH MARINES
AT SANGLEY POINT, R.P.I.

I MAF
1ST MARDIV (-) (REIN)
FORTRPS, FMFPAC
3D MAW

HQ, FMFPAC
1ST MARBDE
3D MAR (-) (REIN)
MAG-24

FALLON TRNG (7)
DET, VMA-331
(6/A-4E A/C)
(11-17JUL71)

HQ, FMFLANT
2D MARDIV (-) (REIN)
FORTRPS, FMFLANT
2D MAW

GTMO BN (REIN)
2D BN, 8TH MAR
BTRY B, 1/10
2 PLATS, 2D TANK BN
DET, FSR

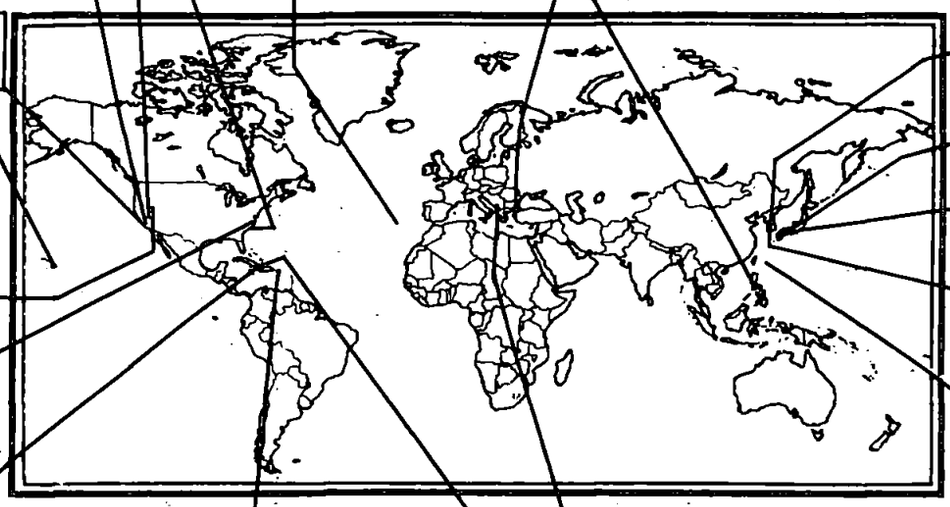

OKINAWA
III MAF
3D MARDIV (-) (REIN)
MAG-36

JAPAN
1ST MAW

FUJI TRAINING
3D RECON BN (-)(REIN)
CO B, 3D TK BN (-)
F BTRY/2/12

BLT 3/4
AT OKINAWA STANDING
DOWN UNTIL 16AUG71

LANFOR7THFLT
31ST MAU
BLT 2/9
HMM-164
ENR ARGOPS
SOUTH CHINA SEA
ETA 15JUL71

VIEQUES TRAINING
DET, H&SCO, 1/2
CO A, 1/2
AT CAMP GARCIA, P.R.

(4) DET 60, VMCJ-2 (4/EA-6A A/C)
ABOARD USS SARATOGA (CVA-60)
AT CORFU, GREECE

LANFORCARIB 1-71
BLT 1/6
AT GTMO
ETD 16JUL71

DISTRIBUTION BY BATTALION/SQUADRON

	INF BNS	VMFA	VMA	VMA(AW)	VMCJ	HMM	HMH	*HML	VMO	VMGR
WESTPAC	6	2	2	1	1	2	1	1	1	1
OKINAWA	(4)	(2)	(2)	(1)	(1)	(1)	(1)	(1)	(1)	(1)
JAPAN										
LANDING FORCE	(2)					(1)				
MIDPAC	2	3				1	1			
HAWAII	(2)	(3)				(1)	(1)			
EASTPAC	10	4	2	2	1	2	2	1	1	1
EL TORO/SANTA ANA		(4)	(2)	(2)	(1)	(2)	(2)			(1)
CAMPEN	(10)							(1)	(1)	
ATLANTIC	8	4	3	3	1	3	2	*2	1	1
CAMP LEJEUNE	(6)									
CHERRY POINT		(1)		(3)	(1)					(1)
BEAUFORT		(3)	(3)							
NEW RIVER						(2)	(2)	*(2)	(1)	
QUANTICO						(1)				
CARIB	(2)									
EUROPE	1					1				
MEDITERRANEAN	(1)					(1)				
GRAND TOTAL	27	13	7	6	3	9	6	4	3	3

*HMA-269, MAG-26 AT NEW RIVER, N. C.

UNCLASSIFIED
Unclassified
[redacted]

TAB 31-1

[redacted]

UNCLASSIFIED

MARINE CORPS COMMAND CENTER

14 JULY 1971

FLEET MARINE FORCE MOVEMENTS

	UNIT	ETD/ATD	FROM	DESTINATION	ETA/ATA
	MOVEMENTS 8 - 14 JULY 1971				
(9)	LANFORCARIB 1-71 (BLT 1/6)	8JUL71	CAMP LEJEUNE, NORTH CAROLINA	GUANTANAMO BAY, CUBA	11JUL71
	3D BN, 9TH MAR	7JUL71	FUJI, JAPAN	OKINAWA	11JUL71
(1)	CO A, 1ST ENGR BN	22JUN71	DANANG, RVN	CAMP PENDLETON, CALIFORNIA	9JUL71
(1)	CO A, 1ST MT BN	22JUN71	DANANG, RVN	CAMP PENDLETON, CALIFORNIA	9JUL71
(1)	CO C, 1ST SP BN	22JUN71	DANANG, RVN	CAMP PENDLETON, CALIFORNIA	9JUL71
(1)	H&MS-16 (-)	20JUN71	DANANG, RVN	SANTA ANA, CALIFORNIA	17JUL71
(1)	MABS-16	20JUN71	DANANG, RVN	SANTA ANA, CALIFORNIA	17JUL71
(1)	CO A (REIN), 7TH ENGR BN	22JUN71	DANANG, RVN	29 PALMS, CALIFORNIA	18JUL71
(1)	COMM SPT CO (-), 7TH COMM BN	24JUN71	DANANG, RVN	KANEOHE, HAWAII	12JUL71
(1)	CO A, 1ST MED BN	22JUN71	DANANG, RVN	CAMP PENDLETON, CALIFORNIA	18JUL71
(1)	DET, 5TH COMM BN	22JUN71	DANANG, RVN	CAMP PENDLETON, CALIFORNIA	18JUL71
(1)	1ST MP BN	23JUN71	DANANG, RVN	CAMP PENDLETON, CALIFORNIA	9JUL71
(1)	5TH CIT	22JUN71	DANANG, RVN	CAMP LEJEUNE, NORTH CAROLINA	18JUL71
	FLC (-)	24JUN71	DANANG, RVN	CAMP PENDLETON, CALIFORNIA	19JUL71
	3D RECON BN (-)	11JUL71	OKINAWA	FUJI, JAPAN	15JUL71
	CO B, 3D TK BN (-)	11JUL71	OKINAWA	FUJI, JAPAN	15JUL71
	BTRY F/2/12	11JUL71	OKINAWA	FUJI, JAPAN	15JUL71
(3)	VMFA-333	6JUL71	NORFOLK, VIRGINIA	ROTA, SPAIN	15JUL71
(4)	DET 60, VMCJ-2	12JUL71	TYRRHENIAN/IONIAN SEAS	CORFU, GREECE	14JUL71
(7)	DET, VMA-331	10JUL71	CHINA LAKE, CALIFORNIA	FALLON, NEVADA	10JUL71
(7)	DET, VMA-324	10JUL71	BEAUFORT, SOUTH CAROLINA	CHINA LAKE, CALIFORNIA	10JUL71
(1)	DET A, VMA(AW)-224	7JUL71	PENSACOLA, FLORIDA	CHERRY POINT, NORTH CAROLINA	10JUL71
	3D 8" HOW BTRY	9JUL71	1ST MARDIV	DEACTIVATED	
	LANFOR6THFLT 1-71 (32D MAU)	11JUL71	NAVPLION, GREECE	KUSADASI, TURKEY	12JUL71
(5)	LANFOR7THFLT (31ST MAU)	14JUL71	SUBIC BAY, R.P.I.	ARGOPS SOUTH CHINA SEA	15JUL71
	PROJECTED MOVEMENTS 15 - 21 JULY 1971				
(5)	LANFOR7THFLT (31ST MAU)	16JUL71	ARGOPS SOUTH CHINA SEA	HONG KONG	19JUL71
(2)	LANFOR6THFLT 1-71 (32D MAU)	15JUL71	KUSADASI, TURKEY	AMPHIBIOUS OPS AT SEA	15JUL71
(3)	VMFA-333	16JUL71	ROTA, SPAIN	OPS TYRRHENIAN SEA	17JUL71
(7)	DET VMA-331	17JUL71	FALLON, NEVADA	BEAUFORT, SOUTH CAROLINA	18JUL71
(9)	LANFORCARIB 1-71 (BLT 1/6)	15JUL71	GUANTANAMO BAY, CUBA	PANAMA, CANAL ZONE	17JUL71

NOTES:

(1) PASSAGE OF COMMAND:

UNIT	FROM	TO	DATE
MABS-16 (-)	3D MAB	3D MAW	3JUN71
H&MS-16	3D MAB	3D MAW	20JUN71
CO A (REIN), 7TH ENGR BN	3D MAB	FORTRPS, FMFPAC	10JUN71
1ST MP BN	3D MAB	1ST MARDIV	16JUN71
5TH CIT	3D MAB	FMFLANT	22JUN71
CO A, 1ST ENGR BN	3D MAB	1ST MARDIV	22JUN71
CO A, 1ST MED BN	3D MAB	1ST MARDIV	22JUN71
CO C, 1ST SP BN	3D MAB	1ST MARDIV	22JUN71
CO A, 1ST MT BN	3D MAB	1ST MARDIV	22JUN71
DET, 5TH COMM BN	3D MAB	1ST MARDIV	22JUN71
COMM SPT CO (-), 7TH COMM BN	3D MAB	1ST MARBDE	26JUN71

(2) PARTICIPATED IN PHIBLEX 1-72 DURING THE PERIOD 9-11JUL71 AT NAVPLION, GREECE. PHIBLEX 1-72 WAS A FULL SCALE SUPPORTED AMPHIBIOUS LANDING TO EXERCISE SIXTHFLT IN ALL FACETS OF SUPPORTED AMPHIBIOUS OPERATIONS. AT KUSADASI, TURKEY FROM 12-14JUL71. SCHEDULED FOR AMPHIBIOUS OPERATIONS AT SEA COMMENCING 15JUL71.

(3) OPERATIONS SCHEDULED IN THE TYRRHENIAN SEA DURING THE PERIOD 17-23JUL71.

(4) CONDUCTING OPERATIONS IN THE TYRRHEANIAN/IONIAN SEA (6-12JUL71). PORT VISIT SCHEDULED AT CORFU, GREECE FROM 13-21JUL71.

(5) UPKEEP AT SUBIC BAY, R.P.I. (7-14JUL71). ARGOPS IN THE SOUTH CHINA SEA (15-17JUL71) ENROUTE TO HONG KONG FOR A PORT VISIT (19-25JUL71).

(6) CG, I MAF ACTIVATED THE 7TH MAB (HQ, 7TH MAB, 7TH MARINES AND PROV MAG-50) FOR PLANNING ON 1JUL71 FOR PARTICIPATION IN ROPEVAL 3-71. A MAB SIZE AMPHIBIOUS EXERCISE TO BE CONDUCTED IN THE CAMP PENDLETON/CLEVELAND NATIONAL FOREST AREAS DURING THE PERIOD 8-17SEP71. LANDING FORCE OPERATIONS WILL BE DESIGNED TO TRAIN FORCES IN THE PLANNING AND EXECUTION OF AMPHIBIOUS OPERATIONS INVOLVING THE TECHNIQUE OF STAND-OFF AMPHIBIOUS ASSAULT AND ASPECTS OF THE SEA-BASING CONCEPT. BGEN P. G. GRAHAM, CG, FORTRPS, FMFPAC IS DESIGNATED AS CG, 7TH MAB.

(7) DET VMA-331 AT FALLON, NEVADA FOR TRAINING (11-17JUL71). ETR BEAUFORT, SOUTH CAROLINA IS 18JUL71. DET VMA-324 AT CHINA LAKE, CALIFORNIA FOR TRAINING (10-23JUL71). ETR BEAUFORT, SOUTH CAROLINA IS 23JUL71.

(8) CG, FMFLANT ACTIVATED THE 8TH MAB (HQ, 8TH MAB, 34TH MAU AND PROV MAG-40) FOR PLANNING AND PARTICIPATION IN EXERCISE DEEP FURROW-71. EXERCISE DEEP FURROW-71 IS A JOINT AND COMBINED NATO EXERCISE TO BE CONDUCTED DURING THE PERIOD 9-20OCT71 TO INCLUDE AMPHBIOUS LANDINGS IN TURKISH THRACE BY A COMBINED U.S. AND UNITED KINGDOM/ITALIAN LANDING FORCE. BGEN T. H. MILLER, JR., AWC 2D MAW, IS DESIGNATED AS CG, 8TH MAB.

(9) LANFORCRIB 1-71 (BLT 1/6) IS PARTICIPATING IN A DEFEX/ORIENTATION VISIT (12-14JUL71) AND IS SCHEDULED TO CONDUCT A JUNGLE EXERCISE IN PANAMA, CANAL ZONE (17-28JUL71).

(10) DET A, VMA(AW)-224 (10 A-6A A/C) CONDUCTED TRAINING AT PENSACOLA, FLORIDA DURING THE PERIOD 3-7JUL71 AND RETURNED TO CHERRY POINT ON 7JUL71.

UNCLASSIFIED

Unclassified

TAB 31-2

[redacted]

[redacted] UNCLASSIFIED

MARINE CORPS COMMAND CENTER

FMF PACIFIC UNIT LOCATIONS AND STRENGTHS* (MIDPAC/EASTPAC)

14 JULY 1971

MIDPAC

FMFPAC

HQ, FMFPAC

1st MAR BDE

HQ, 1ST MAR BDE (KANEOHE)

3D MARINES (-)(REIN)
- 1/3
- 2/3

MAG-24
- VMFA-212 (F-4J)
- VMFA-235 (F-4J)
- VMFA-122 (F-4B)
- HMM-262 (CH-46D)
- HMH-463 (CH-53D)
- DET, VMO-6(-) (OV-10A)
- DET, HML-367(-) (UH-1E)

MIDPAC STRENGTH RECAPITULATION	USMC	USN
HQ, FMFPAC	1,047	36
HQ, 1ST MAR BDE	280	14
3D MAR(-)(REIN)	1,263	70
SERVICE/SUPPORT UNITS	478	
MAG-24	1,875	25
OTHER	772	13
GRAND TOTAL MIDPAC	5,715	158

EASTPAC

I MAF

HQ. I MAF (CAMP PENDLETON)

1ST MAR DIV (-) (REIN)

1ST MARINES
- 1/1
- 2/1
- 3/1

5TH MARINES 3/3 (CADRE)
- 1/5
- 2/5
- 3/5

7TH MARINES
- 1/7
- 2/7
- 3/7

FORTRPS FMFPAC

HQ, FORTRPS FMFPAC (29 PALMS)

3D MAW

HQ, 3D MAW (EL TORO)

MAG-13 (EL TORO)
- VMA-223 (A-4F)
- VMA-214 (A-4F)
- VMA(AW)-242 (A-6A)
- VMCJ-3 (RF-4B/EA-6A)
- VMFA-314
- VMFA-323 (F-4B)
- VMFA-334
- VMFA-531 (F-4B)
- VMA(AW)-225

MWSG-37 (EL TORO)
- VMGR-352 (KC-130F)

MHTG-30 (SANTA ANA)
- HMHT-301 (CH-53A)
- HMMT-302 (CH-46F)

MAG-56 (SANTA ANA)
- HMM-161 (CH-46D)
- HMM-163 (CH-46F)
- HMH-361 (CH-53A)
- HMH-363 (CH-53A)

MAG-56 ELEMENTS (CAMPEN)
- VMO-2
- HML-267 (OV-10A/UH-1E)

MCCRTG-10 (YUMA)
- VMFAT-101 (F-4B)
- VMAT-102 (A-4E)
- VMT-103 (TA-4F/J)

MAG-16 (ENROUTE CONUS)

1ST FSR

	USMC	USN
HQ, I MAF	21	
1ST MAR DIV (-) (REIN)	14,244	515
HQ, FORTRPS FMFPAC	1,495	75
3D MAW	11,492	220
1ST FSR	1,564	44
GRAND TOTAL EASTPAC	28,816	854

Unclassified

SOURCE: MARES FORSTAT REPORT DATED 7JUL71.

UNCLASSIFIED [redacted]

TAB 32

UNCLASSIFIED

MARINE CORPS COMMAND CENTER

FMF PACIFIC UNIT LOCATIONS AND STRENGTHS AND OSD CEILING CONSIDERATIONS (WESTPAC)

14 JULY 1971

RVN

	USMC	USN
OSD PROGRAM XIII SPACE AUTHORIZATION	637	
SUB UNIT 1, 1ST ANGLICO	197	10
MACV STAFF/MACV FIELD	179	
NAVADVGRU/MACV UNITS	23	
OTHERS	118	
TOTAL RVN STRENGTH AS OF 8JUL71.	517	10

OKINAWA

III MAF (TF-79)

HQ, III MAF

3D MARDIV (-) (REIN) (TF-79.2)

HQ, 3D MARDIV (-)(REIN)
- 4TH MARINES
  - 1/4
  - 2/4
  - 3/4 (BLT)
- 9TH MARINES
  - 1/9
  - 2/9 (31ST MAU)
  - 3/9

1ST MAW

MAG-36

VMGR-152	(KC-130F)
VMO-6 (-)	(OV-10A/UH-1E)
HMH-462	(CH-53D)
HMM-164	(CH-46D/CH-53D/UH-1E)(31ST MAU)
HMM-165	(CH-46D)
HML-367	(UH-1E/AH-1G/J)

3D FSR

		USMC	USN
	OSD PROGRAM XIII SPACE AUTHORIZATION	19,249	934
	OKINAWA STRENGTH RECAPITULATION		
	III MAF		
	HQ, III MAF	131	
(3)	3D MARDIV (-)(REIN)	12,396	580
	1ST MAW ELEMENTS	3,021	32
	3D FSR	3,080	50
(1)	III MAF TOTAL	18,628	662
	OTHERS		
	MCB CAMP BUTLER/NON FMF	1,300	25
	NON-DEPLOYABLE CASUALS	4	
	SVN ORIGINATED PATIENTS	7	
	OTHER TOTAL	1,311	25
	GRAND TOTAL OKINAWA STRENGTH AS OF 1JUL71.	19,939	687

JAPAN

1ST MAW (TF-79.3)

HQ, 1ST MAW

MAG-12

VMA-211	(A-4E)
VMA-311	(A-4E)
VMA(AW)-533	(A-6A)

MAG-15

VMFA-115	(F-4B)
VMFA-232	(F-4J)
VMCJ-1	(EA-6A/RF-4B)

		USMC	USN
	OSD PROGRAM XIII SPACE AUTHORIZATION	7,000	
	JAPAN STRENGTH RECAPITULATION		
	HQ, 1ST MAW	853	54
	1ST MAW	4,742	53
(2)	NON-FMF	1,062	
	GRAND TOTAL JAPAN STRENGTH AS OF 1JUL71.	6,657	107

NOTES
(1) LESS ONE MAU.
(2) INCLUDES MCAS, IWAKUNI, MB YOKOSUKA, MB SASEBO, AND CO "E", MAR SPT BN.
(3) SANGLEY AUGMENTATION FORCE (DET, 4TH MARINES) CONSISTING OF 1 OFF AND 121 ENL INCLUDED IN 3D MARDIV (-) (REIN) STRENGTH.

SOURCES: RVN STRENGTH: COMUSMACV WEEKLY STRENGTH REPORT MSG 100915ZJUL71.

OKI/JAPAN STRENGTH: FMFPAC WESTPAC STRENGTH VERIFICATION MSG 070305ZJUL71.

Unclassified
UNCLASSIFIED

TAB 33

[redacted]

UNCLASSIFIED

MARINE CORPS COMMAND CENTER

LANDING FORCES, SEVENTH FLEET

31st MAU*

14 JULY 1971

UNITS EMBARKED	STRENGTH			
TASK GROUP 79.4	USMC		USN	
	OFF	ENL	OFF	ENL
31ST MAU HQ DET	9	13		
COL E. F. ROTH, JR.				
BLT 2/9				
(LTCOL F. J. JOHNSON, JR.)				
2D BN, 9TH MARINES	48	991	2	32
E/2/12TH MARINES	4	89		2
PLT, CO C, 3D RECON BN	1	23		2
PLT, CO B, 1ST AMTRAC BN	1	44		1
PLT, CO C, 3D SP BN	1	38		2
PLT, CO A, 3D MT BN	1	21		
PLT, CO A, 3D TANK BN	1	26		1
PLT, CO A, 3D ENGR BN	1	37		1
PLT, CO B, 3D MED BN		5	1	16
DET, HQBN, 3D MARDIV	1	7		
LOGISTIC SUPPORT UNIT				
DET, 3D SERV BN	1	31		1
DET, 3D FSR	1	25		
DET, 3D DENTAL CO			1	1
HMM-164	53	239	1	2
(LTCOL A. J. KETTERING)				
DET, HMH-462	8	29		
DET, HML-367	7	17		
TOTALS	138	1635	5	61

SHIPPING

USS NEW ORLEANS (LPH-11)
USS VANCOUVER (LPD-2)
USS WEXFORD COUNTY (LST-1168)
USS THOMASTON (LSD-28)

AIRCRAFT

13/CH-46D
4/CH-53D
4/UH-1E

ARMS & EQUIPMENT

1 LVTP-5 CMD
10 LVTP-5
5 M48 TANKS
6 105 HOW TD
8 106MM RR
8 81MM MORTAR
36 TRUCK, UTILITY PLATFORM W/O 106 RR, M-274
40 TRUCK, UTILITY, M-151 & M-715
1 TRUCK, UTILITY MRC-83
2 TRUCK, UTILITY MRC-123
4 TRUCK, UTILITY MRC-109
1 TRUCK, UTILITY MRC-124
1 TRUCK, UTILITY MRC-135
1 TRUCK, AMBULANCE M-718
1 TRUCK, CARGO 5T M-54
2 TRUCK, TANK M-49
2 TRUCK, DUMP 5T M-51
5 TRUCK, CARGO 3/4T M-37
35 TRUCK, CARGO 2½T M-35
1 TRUCK, WRECKER 5T M-543
36 TRAILER, CARGO M-416
17 TRAILER, CARGO M-105
6 TRAILER, TANK WATER M-149
2 TRAILER, CARGO M-101
2 KW LIGHT UNIT
4 TRACTOR TD-15 & TD-25
3 CRANE M-60 & M-62
1 HYPOCHLORINATION UNIT
2 TRUCK, M-43
2 ROUGH TERRAIN FORK LIFT (6000 LBS)
1 STEAM CLEANER
1 WATER PURIFICATION UNIT
1 BATH UNIT
2 GENERATOR PU 708/G & PU 692/G
4 GENERATOR PU-667 & PU 669
51 M60 MG
18 M60 MG HELO MOUNTED
39 50 CAL. HELO MOUNTED
6 60MM MORTAR
24 3.5 ROCKET LAUNCHER
8 FLAME THROWERS
10 50 CAL. MG

BLT 1/4*

4 AUGUST 1971

UNITS EMBARKED	STRENGTH			
TASK GROUP 79.5	USMC		USN	
	OFF	ENL	OFF	ENL
BLT 1/4				
(LTCOL D. G. ROBISON)				
1ST BN, 4TH MARINES	44	934	2	44
BTRY "C", (REIN), 3D BN, 12TH MAR	8	119	1	2
PLT, CO D, 3D RECON BN	1	20		
PLT, CO A, 1ST AMTRAC BN	1	39		1
PLT, CO C, 3D TANK BN	1	27		1
PLT, CO C, 9TH MT BN	1	22		
PLT, CO C, 3D ENGR BN	1	39		1
PLT, CO C, 3D SP BN	1	45		2
PLT, CO D, 3D MED BN		5	1	17
DET, 3D DENT CO			1	1
DET, HQBN, 3D MARDIV	1	4		
LOGISTIC SUPPORT UNIT	1	38		
DET, 3D SERV BN				
DET, 3D FSR				
		13		
TOTALS	60	1292	5	69

SHIPPING

USS JUNEAU (LPD-10)
USS ST. LOUIS (LKA-116)
USS ALAMO (LSD-33)
USS WHITFIELD CTY (LST-1169)

AIRCRAFT

ARMS & EQUIPMENT

1 LVTP-5 CMD
10 LVTP-5
5 M48 TANKS
6 105 HOW TD
8 106MM RR
8 81MM MORTAR
33 TRUCK, UTILITY PLATFORM W/O 106 RR, M-274
30 TRUCK, UTILITY , M-151
4 TRUCK, VAN MRC-109
2 TRUCK, UTILITY M-123
2 TRUCK, UTILITY M-124
1 TRUCK, AMBULANCE M-718
2 TRUCK, AMBULANCE M-43
16 TRUCK, CARGO 2½T M-35
4 TRUCK, CARGO 3/4T M-37
2 TRUCK, TANK M-49
2 TRUCK, DUMP 5T M-51
14 TRUCK, CARGO 5T M-54
1 TRUCK, WRECKER 5T M-543
4 TRAILER, CARGO M-101
6 TRAILER, CARGO 3/4T M-101A1
15 TRAILER, CARGO M-105
4 TRAILER, TANK WATER M-149
27 TRAILER, CARGO M-416
1 30 KW GENERATOR
1 GENERATOR SET PU-720G
1 GENERATOR SET TRAILER MOUNTED PU-692G
1 BATH UNIT
1 WATER PURIFICATION UNIT
2 CONEX BOX
1 STEAM CLEANER

UNCLASSIFIED

Unclassified

* SEE TAB 31 FOR PRESENT LOCATION

TAB 34

[redacted]

[redacted]

UNCLASSIFIED

MARINE CORPS COMMAND CENTER

FMF ATLANTIC UNIT LOCATIONS AND STRENGTHS*

14 JULY 1971

EAST COAST

FMFLANT

HQ, FMFLANT (NORFOLK)

2D MARDIV

HQ, 2D MARDIV (CAMLEJ)

2D MARINES
- 1/2
- 2/2
- 3/2 (LANFOR6THFLT 1-71)(32D MAU)

6TH MARINES
- 1/6 (LANFORCARIB 1-71)
- 2/6
- 3/6

8TH MARINES
- 1/8
- 2/8 (GTMO BN (REIN)
- 3/8

FORTRPS FMFLANT

HQ, FORTRPS (CAMLEJ)

2D MAW

HQ, 2D MAW (CHERRY POINT)

MAG-14 (CHERRY POINT)

VMCJ-2	(RF-4F/EA-6A)
VMA(AW)-224	(A-6A)
VMA(AW)-121	(A-6A)
VMA(AW)-332	(A-6A)
VMFA-312	(F-4B)

MWSG-27 (CHERRY POINT)

VMGR-252	(KC-130F)

MCCRTG-20 (CHERRY POINT)

VMFAT-201	(F-4B/J)
VMAT(AW)-202	(A-6A/TC-4C)
VMT-203	(TA-4F/J)

MAG-31 (BEAUFORT)

VMFA-251	(F-4B/J)
VMFA-333	(F-4J)
VMFA-451	(F-4J)

MAG-32 (BEAUFORT)

VMA-331	(A-4E)
VMA-324	(A-4E/M)
VMA-513	(AV-8A)

MAG-26 (NEW RIVER)

VMO-1	(OV-10A)
HML-167	
HMM-162	(CH-46F/CH-53D/UH-1E)(LANFOR6THFLT 1-71)(32D MAU)
HMM-261	(CH-46F)
HMM-264	(CH-46F)
HMM-263	(CH-46D/F) (QUANTICO)
HMH-461	(CH-53A/D)
HMH-362	(CH-53D)
HMA-269	(UH-1E/N/AH-1J)

MHTG-40 (NEW RIVER)

HMHT-401	(CH-53D)
HMMT-402	(CH-46F)

2D FSR

FMFLANT STRENGTH RECAPITULATION	USMC	USN
HQ, FMFLANT	805	4
2D MARDIV	16,407	650
FORTRPS	5,166	146
2D MAW	14,382	217
2D FSR	2,103	27
GRAND TOTAL FMFLANT	38,863	1,044

* SOURCE: MARES FORSTAT REPORT DATED 7JUL71.

UNCLASSIFIED

TAB 35

Unclassified [redacted]

[redacted]

UNCLASSIFIED

MARINE CORPS COMMAND CENTER

LANDING FORCE, SIXTH FLEET 1-71 *

32D MAU

14 JULY 1971

UNITS EMBARKED	STRENGTH			
TASK GROUP 61/62	USMC		USN	
	OFF	ENL	OFF	ENL
32D MAU HQ	12	38		
(COL J. R. WEAVER)				
DET, PAO SECT				
DET, PHOTO SECT				
BLT 3/2				
(LTCOL T. J. WILLIS)				
3D BN, 2D MARINES	44	913	2	34
DET, HQCO, 2DMAR DIV		4		
BTRY I, 3DBN, 10THMAR	8	144		2
DET, HQBTRY, 3DBN, 10THMAR		7	1	
3D PLAT, CO A, 2D ENGR BN	1	38		
1ST PLAT, CO B, 2D RECON BN	1	23		1
2D PLAT, CO B, 2D TANK BN	1	34		
3D PLAT, CO, 2D AMTRAC BN	1	44		1
DET, RADAR BEACON TEAM		2		
LOGISTICAL SUPPORT UNIT 32	12	145	2	26
(MAJOR W. P. FINNEGAN)				
DET, 2D SERVICE BN				
DET, 2D FSR				
1ST PLAT, CO A, 2D SP BN				
DET, 2D MED BN				
1ST PLAT, CO C, 8TH MT BN				
PROV MAG-60 (LTCOL J. W. ALBER)	2	1		
HMM-162 (-) (REIN)	44	185	1	2
DET, MASS-1	2	4		
TOTALS	128	1582	6	66

SHIPPING

USS GUAM	(LPH-9)
USS NASHVILLE	(LPD-13)
USS SPIEGEL GROVE	(LSD-32)
USS NEWPORT	(LST-1179)

AIRCRAFT

12/CH-46F
4/CH-53D
2/UH-1E

ARMS & EQUIPMENT

1	LVTP-5 CMD
10	LVTP-5
6	105MM HOWITZER
7	M48 TANKS
8	106MM RR
8	TRUCKS W/106MM RR
8	81 MM MORTARS
8	FLAME THROWERS
40	TRAILER CARGO
22	TRAILER, CARGO M-105
3	TRAILER, CARGO 3/4 TON
6	TRAILER, TANK
9	TRAILER, TANK WATER ½ TON
3	SEMI-TRAILER, 12 TON
2	DOLLY TRAILER CONVERTER
4	TRUCK UTILITY MRC-83
7	TRUCK UTILITY MRC-109
2	TURCK UTILITY MRC-124
41	TRUCK UTILITY ¼ TON
1	TRUCK M-715 W/ VAN ELECTRIC
1	TRUCK, TRACTOR 5 TON
4	TRUCK, CARGO 5 TON
30	TRUCK PLATFORM UTILITY ½ TON
5	TRUCK, DUMP 5 TON
3	TRUCK, AMBULANCE 1¼ TON
2	TRUCK, AMBULANCE ¼ TON
3	TRUCK, CARGO 3/4 TON
1	TRUCK, 2½ TON
39	TRUCK, CARGO 2½ TON
2	TRUCK, WRECKER 5 TON
1	TRUCK, LIFT FORK, ROUGH TERRAIN
3	TRUCK, TANK GASOLINE, 1200 GAL
2	CRAWLER CRANE
4	BULLDOZER
1	CRANE M60
4	EIMCO TRACTOR
6	TRACTOR MED
1	AMBULANCE 3/4 TON
1	JEEP AMBULANCE ¼ TON
1	FORK LIFT
1	STEAM TRAILER
2	FLOOD LIGHT TRAILER
1	ERDLATOR WATER DIST EQUIP SET 600 GP
1	FLR 5 KW GENERATOR
2	BLADDERS, 10,000 GALS
2	BATH UNITS
2	GENERATOR SET
2	COMPRESSOR
1	TRUCK, M35 W/ WELDER
1	MINE DETECTOR

* SEE TAB 31 FOR PRESENT LOCATIONS.
(1) PROV MAG-60 ALSO INCLUDES VMFA-251 AND VMA (AW)-121 (OPCON TO MAG-32 AND MAG-14 RESPECTIVELY) WHICH ARE ON CONUS STANDBY FOR CONTINGENCY OPERATIONS.

LANDING FORCE, CARIBBEAN 1-71 *

14 JULY 1971

UNITS EMBARKED	STRENGTH			
TASK GROUP 45.9	USMC		USN	
	OFF	ENL	OFF	ENL
BLT 1/6				
(LTCOL T. F. QUALLS)				
1ST BN, 6TH MARINES	36	801	2	31
DET, HQCO, 6TH MARINES				
DET, HQ BTRY, 2D BN, 10TH MAR				
BTRY D, 2D BN, 10TH MAR	6	108	1	2
PLAT, CO A, 2D RECON BN	1	23		
PLAT, CO B, 2D ENGR BN	1	30		
PLAT, CO A, 8TH MT BN	1	22		
PLAT, CO A, 2D SP BN	1	39		
PLAT, CO B, 2D TANK BN	1	28		
PLAT, CO B, 2D AMTRAC BN	1	43		
DET, HQBN, 2D MARDIV	1	14		
DET, 2D SERVICE BN	1	38		
DET, 2D FSR	1	36		
DET, 2D MED BN		8		10
DET, 2D DENTAL CO			1	1
TOTALS	51	1190	4	44

SHIPPING

USS FRANCIS MARION	(LPA-249)
USS CHARLESTON	(LKA-113)
USS SAN MARCOS	(LSD-25)
USS YORK COUNTY	(LST-1175)

AIRCRAFT

ARMS & EQUIPMENT

6	105MM HOW
11	LVTP
8	106MM RR
8	81MM MORTAR
5	M-48 TANKS
30	TRAILER ¼T
16	TRAILER 1½T
1	TRAILER 3/4T
4	TRAILER, WATER
3	TRAILER (M-101) 3/4T
3	SEMI-TRAILER 12T
3	TRUCK UTILITY MRC-83
6	TRUCK UTILITY MRC-109
2	TRUCK UTILITY MRC-124
3	TRUCK, DUMP 5T
3	TRUCK, CARGO 3/4T
35	TRUCK, CARGO 2½T
3	SEMI TRUCK 12T
1	TRUCK, SHOP SET
1	TRUCK 5T
1	AMBULANCE ¼T
1	AMBULANCE 3/4T
30	JEEP ¼T
32	MULES
2	FUEL TANKER
2	TRACTOR 5T
2	WRECKER
1	CRANE M-60
2	CRAWLER CRANE
1	TRUCK CRANE
5	CRAWLER TRACTOR
2	ROUGH TERRAIN FORK LIFT
1	STEAM CLEANING UNIT
1	TRAILER, BATH UNIT
1	FLOODLIGHT SET
1	GENERATOR
2	DOLLY TRAILER CONVERTER

UNCLASSIFIED

Unclassified

* SEE TAB 31 FOR PRESENT LOCATION.
(1) 38TH MAU HQ (COL F. R. KRAINCE), PROV MAG-80 INCLUDING AN HMM, VMA, VMFA, AND DET, MASS ARE ADMINISTRATIVELY ASSIGNED AND ARE ON CONUS STANDBY FOR CONTINGENCY OPERATIONS.

TAB 36-1

[redacted]

[redacted]

UNCLASSIFIED

MARINE CORPS COMMAND CENTER

GUANTANAMO BAY BATTALION (REIN)*

14 JULY 1971

UNITS	STRENGTH**				ARMS & EQUIPMENT
	USMC		USN		
	OFF	ENL	OFF	ENL	
2D BN (REIN), 8TH MARINES					5 M-103 TANKS
LTCOL O. O. PAREDES					7 M48 TANKS
2D BN, 8TH MARINES	29	732	3	23	2 M67 TANKS (FLAME)
BTRY B, 1ST BN, 10TH MAR	6	132		3	8 106MM RR
2D TANK BN (2 PLATS)	1	35			8 81 MORTAR
DET, 2D FSR (LSU)		18			6 155 HOW TD#
PLAT, 2D ANGLICO	3	45	3		4 105 HOW TD#
DET, 2D DENTAL CO			1	1	6 106MM RR#
					8 81 MORTAR#
TOTALS	39	962	7	27	

*SEE TAB 31 FOR LOCATION.
**MARES FORSTAT OF 7JUL71.
#USN OWNED AND USMC OPERATED.

UNCLASSIFIED

[redacted]

TAB 36-2

Unclassified

UNCLASSIFIED

[redacted]

MARINE CORPS COMMAND CENTER

CHRONOLOGY OF SIGNIFICANT EVENTS

14 JULY 1971

DATES	LOCATION	UNITS	REMARKS
15JUN71	FUTEMA, OKINAWA	MACS-8, MACG-18, 1ST MAW	MACS-8 DEACTIVATED 150530ZJUN71.
26JUN71	DANANG, RVN	FLC	FLC DEACTIVATED 260900ZJUN71.
27JUN71	DANANG, RVN	3D MAB	AT 270400ZJUN71 HQ 3D MAB WAS DEACTIVATED AND MAJGEN A. J. ARMSTRONG, CG 3D MAB, DEPARTED DANANG ENROUTE TO HQ FMFPAC, HAWAII. WITH THE DEACTIVATION OF HQ 3D MAB, ALL 13593 OSD SPACES SCHEDULED FOR REDEPLOYMENT/DEACTIVATION DURING INCREMENT VII (KEYSTONE ORIOLE (ALPHA)) HAVE EITHER REDEPLOYED FROM RVN OR HAVE BEEN DEACTIVATED, LEAVING A TRANSITIONAL SUPPORT FORCE OF 637 PROGRAM XIII OSD SPACES.
30JUN71	ATSUGI, JAPAN SANGLEY PT., R.P.I.	MB, ATSUGI MB, SANGLEY PT.	MB, ATSUGI, JAPAN, DEACTIVATED 30 JUNE 1971. MB, SANGLEY PT., R.P.I. DEACTIVATED 30 JUNE 1971
30JUN71	29 PALMS, CALIF.	CO A (REIN) & DET, HQCO, 11TH ENGR BN, FORTRPS FMFPAC	CO A (REIN) AND DET, HQCO, 11TH ENGR BN DEACTIVATED 301600ZJUN71.
30JUN71	BEAUFORT, S.C.	MACS-9, MACG-28, 2DMAW	MACS-9 DEACTIVATED 30JUN71.
1JUL71	IWAKUNI, JAPAN CHERRY PT, N.C. EL TORO, CALIF GLENVIEW, ILL.	1ST MAW 2D MAW 3D MAW 4TH MAW	DEACTIVATIONS MWHG-1 AND MWFS-1, 1ST MAW MWHG-2 AND MWFS-2, 2D MAW MWHG-3 AND MWFS-3, 3D MAW MWHG-4 (GLENVIEW, ILLINOIS) AND MWFS-4 (GREEN BAY, WISC), 4TH MAW (USMCR) REDESIGNATIONS FROM — TO 1ST MAW H&HS-1 — MWHS-1 MWCS-1 — MWCS-18 2D MAW H&HS-2 — MWHS-2 MWCS-2 — MWCS-28 3D MAW H&HS-3 — MWHS-3 MWCS-3 — MWCS-38 4TH MAW (USMCR) H&HS-4 (DETROIT, MICH.) — MWHS-4 MWCS-4 (CHICAGO, ILL.) — MWCS-48
9JUL71	CAMPEN, CALIF	3D 8" HOW BTRY, 1ST MARDIV	3D 8" HOW BTRY DEACTIVATED 091500ZJUL71.

UNCLASSIFIED

TAB 41-5

[redacted]

Unclassified

[redacted]

UNCLASSIFIED

MARINE CORPS COMMAND CENTER

14 JULY 1971

USMC/ENEMY CASUALTIES IN SEASIA

USMC BATTLE CASUALTIES

KIA/DOW	WIA (EVAC)	WIA (RTD)	MIA/PW
12,922	51,356	37,161	81/23

USMC CASUALTY FIGURES ARE PROVIDED DAILY BY HQMC CASUALTY SECTION (CODE DNA) AND REFLECT ALL CASUALTIES REPORTED AS OF 13JUL71.

USMC NON-BATTLE CASUALTIES

DEAD	INJURED	MISSING
1,678	1,935	12

FIGURES INDICATED AS INJURED ARE ONLY THOSE IN SERIOUS/CRITICAL INJURY OR DISEASE CATEGORY AND DO NOT INCLUDE THOSE OF A MINOR NATURE

USMC INFLICTED ENEMY CASUALTIES

KIA	PW	WPNS
86,535	4,098	22,879

TYPICAL DISPOSITION OF 100 USMC WIA

100

- 42 — Treated in field & returned to duty
- 58 — Admitted to hospital

→ 58

- 9 — Treated & returned to duty in SVN
- 49 — Evacuated from SVN

→ 49

- 28 — Treated in WestPac & returned to duty
- 21 — Evacuated to CONUS hospital

→ 21

- 6 — Treated & returned to full duty
- 7 — Physical disability separation
- 2 — Dies of wounds
- 6 — Other (long term treatment, etc.)

UNCLASSIFIED

[redacted]

TAB 45-1

Unclassified

UNCLASSIFIED

Department of Defense

NUMBER OF CASUALTIES INCURRED BY U. S. MILITARY PERSONNEL
IN CONNECTION WITH THE CONFLICT IN VIET-NAM

Cumulative from January 1, 1961 through July 3, 1971

14 JULY 1971

	Army	Navy *	Marine Corps	Air Force	Total
A. CASUALTIES RESULTING FROM ACTIONS BY HOSTILE FORCES					
1. Killed	25,056	1,050	11,465	452	38,023
2. Wounded or Injured					
a. Died of wounds	3,478	140	1,449	42	5,109
b. Nonfatal wounds					
Hospital care required	95,646	4,081	51,356	763	151,846
Hospital care not required	103,573	5,826	37,161	2,286	148,846
3. Missing					
a. Died while missing	1,615	182	5	392	2,194
b. Returned to control	62	7	6	26	101
c. Current missing	275	113	81	557	1,026
4. Captured or Interned					
a. Died while captured or interned	14	-	3	1	18
b. Returned to control	37	3	5	6	51
c. Current captured or interned	62	144	23	236	465
5. Deaths					
a. From aircraft accidents/incidents					
Fixed Wing	88	155	139	692	1,074
Helicopter	2,185	62	429	59	2,735
b. From ground action	27,890	1,155	12,354	136	41,535
TOTAL DEATHS a/	30,163	1,372	12,922	887	45,344
B. CASUALTIES NOT THE RESULT OF ACTIONS BY HOSTILE FORCES					
6. Current Missing	127	-	12	-	139
7. Deaths					
a. From aircraft accidents/incidents					
Fixed Wing	246	172	45	277	740
Helicopter	1,695	52	242	18	2,007
b. From other causes	4,643	603	1,391	260	6,897
TOTAL DEATHS	6,584	827	1,678	555	9,644

a/ Sum of lines 1, 2a, 3a and 4a.

*Navy figures include a small number of Coast Guard casualties.

Department of Defense
OASD (Comptroller)
Directorate for Information Operations
July 7, 1971

TAB 45-2

UNCLASSIFIED

Unclassified

UNCLASSIFIED

MARINE CORPS COMMAND CENTER

1 JULY 1971

DISPOSITION AND STRENGTH OF MAJOR US AND FW FORCES IN RVN

DISPOSITION

MR RECAP

MR I*	XXIV CORPS
220 MILES LENGTH@	30-75 MILES WIDTH
14,600 SQ MI AREA	2,860,300 CIV POP
	101ST ABN DIV (AM)
USA 23 BNs	1STBDE, 5TH INF DIV (MECH)
ARVN 36 BNs	23D INF DIV (AMERICAL)
ROKMC 4 BNs	2D ROKMC BDE
VNMC 5 BNs	147TH VNMC BDE
ARVN CAV 4 BNs	258TH VNMC BDE
TOTAL 72 BNs	1ST ARVN DIV
	2D ARVN DIV

MR II*	SRAG (NHA TRANG)
315 MILES LENGTH@	45-130 MILES WIDTH
31,300 SQ MI AREA	2,898,200 CIV POP
USA 5 BNs	173D ABN BDE
ARVN 31 BNs	ROK CAP INF DIV
ROK 18 BNs	9TH ROK DIV
ARVN CAV 3	22D ARVN DIV
TOTAL 57 BNs	23D ARVN DIV

MR III*	TRAC (LONG BINH)
90 MILES LENGTH@	55-115 MILES WIDTH
10,100 SQ MI AREA	5,133,000 CIV POP
USA 5 BNs	2D BDE, 25TH INF DIV
ARVN 55 BNs	1ST AUSTRALIAN TF
AUSTRALIA 2 BNs	ROYAL THAI VOL REGT
THAILAND 6 BNs	1ST CAV DIV (AM)
ARVN CAV 5 BNs	5TH ARVN DIV
VNMC 4 BNs	18TH ARVN DIV
	25TH ARVN DIV
TOTAL 77 BNs	369TH VNMC BDE
	1ST ARVN ABN DIV

MR IV*	DRAC (CAN THO)
195 MILES LENGTH@	35-115 MILES WIDTH
14,600 SQ MI AREA	5,700,1000 CIV POP
ARVN 41 BNs	7TH ARVN DIV
ARVN CAV 5 BNs	9TH ARVN DIV
	21ST ARVN DIV
TOTAL 46 BNs	

@ Coastal Arc
# Includes 3 RGR Bns
* See RVN Recap note

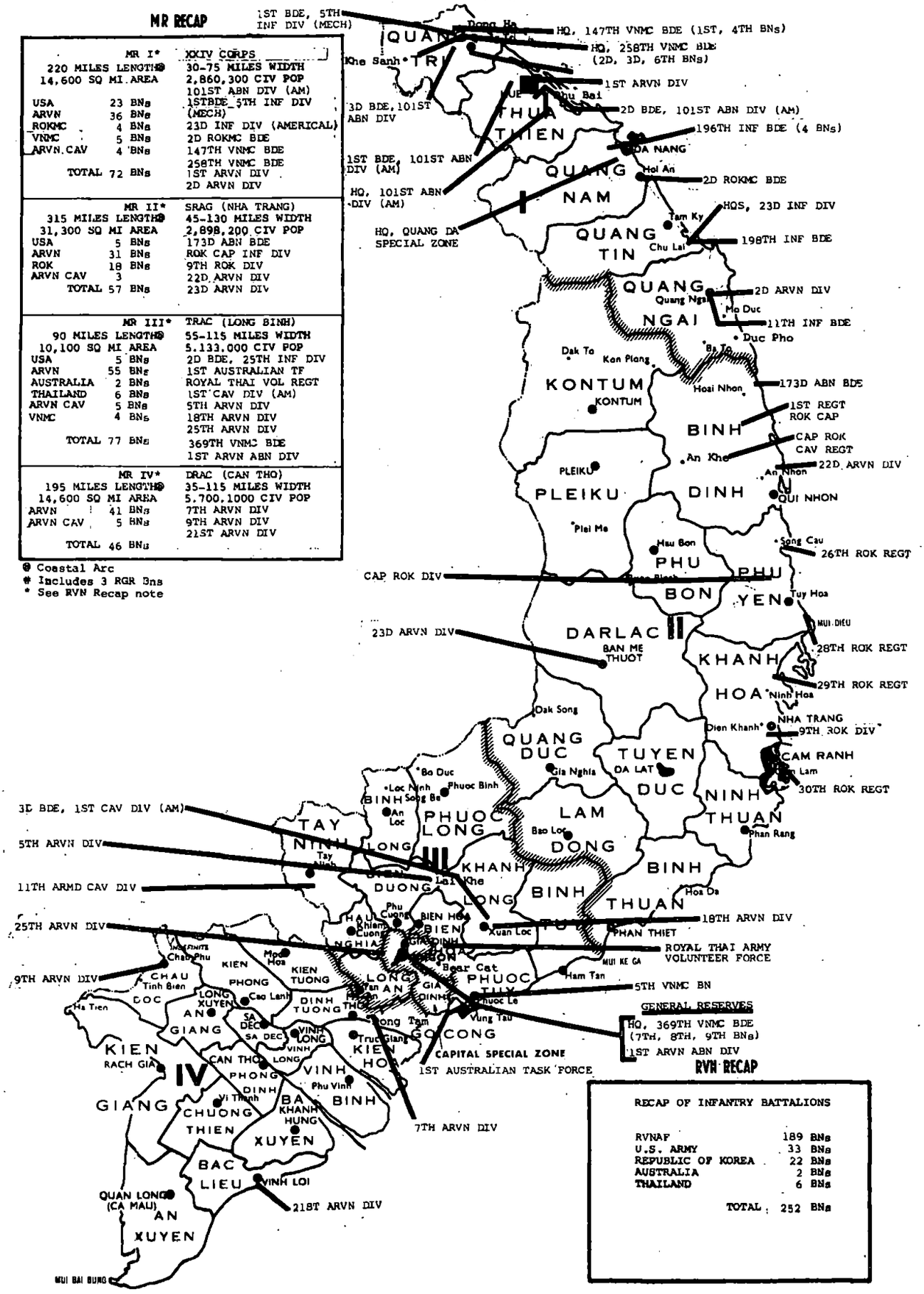

RVN RECAP

RECAP OF INFANTRY BATTALIONS

RVNAF	189 BNs
U.S. ARMY	33 BNs
REPUBLIC OF KOREA	22 BNs
AUSTRALIA	2 BNs
THAILAND	6 BNs
TOTAL	252 BNs

TAB 46-1

Unclassified
UNCLASSIFIED

[redacted]

MARINE CORPS COMMAND CENTER

STRENGTHS*

UNCLASSIFIED

14 JULY 1971

RVN ARMED FORCES (RVNAF)

ARMY (ARVN)	412,035
NAVY (VNN)	41,392
AIR FORCE (VNAF)	48,989
MARINE CORPS (VNMC)	13,651
REGIONAL FORCES (RF)	294,173
POPULAR FORCES (PF)	247,997
TOTAL RVNAF	1,058,237

UNITED STATES FORCES

ARMY	188,117
NAVY	10,727
AIR FORCE	36,983
MARINE CORPS	517
COAST GUARD	102
TOTAL U.S.	236,446

FREE WORLD MILITARY ASSISTANCE FORCES (FWMAF)

REPUBLIC OF KOREA	48,017
AUSTRALIA	6,326
PHILIPPINES	86
THAILAND	11,217
NEW ZEALAND	276
REPUBLIC OF CHINA	31
SPAIN	7
TOTAL FWMAF	65,960

TOTAL FORCES IN RVN	1,360,643

★ SOURCE: RVNAF - MACV MONTHLY RPT OF GVN STRENGTH AS OF 30APR71.

ALL OTHERS - MACV WEEKLY STRENGTH RPT AS OF 2400, 8JUL71.

UNCLASSIFIED

Unclassified

TAB 46-2

[redacted]

SECRET

UNCLASSIFIED

MARINE CORPS COMMAND CENTER

REPUBLIC OF KOREA MARINE CORPS

14 JULY 1971

Commandant: General LEE, BYUNG MOON

Senior Marine Advisor: Colonel Howard T. PITTMAN, USMC

Strength: 32,360 (JUN71)

The Headquarters of the Republic of Korea Marine Corps (ROKMC) is located in Seoul. Marine Barracks are located in Seoul and the major Naval Bases at Inchon, Mokpo, Chejudo, Chinhae, Pusan, and Mukho. The ROKMC Supply and Maintenance Depot as well as the ROK Marine Schools Base are located at Chinhae. The Schools Base offers Recruit Training, NCO School, Supply School, LVT School, Officer Candidate Course, Drill Instructor School, Senior Amphibious Warfare School, English Language Training, and the ROKMC Command and Staff College. The ROK Marine Corps Amphibious Base at Pohang houses the 1st ROKMC Division (-), Special Training Unit to support ROK Marine personnel assigned to the 2d ROKMC Brigade (Blue Dragons) in Vietnam. The ROKMC is operationally organized as indicated below:

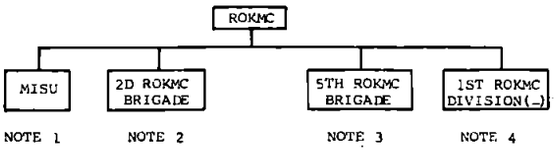

NOTE 1: Marine Island Security Unit (MISU) is a defense force approximating a reinforced Infantry Battalion in size and weaponry. It is located on the offshore islands of the Westerly extension of the DMZ mandated to the United Nations. Although it is administratively controlled by HQ, ROKMC, it is under the operational control of Commander, ROK Fleet. The organization of the MISU is indicated on Chart 1.

NOTE 2: The 2d ROK Marine Brigade is deployed to the Republic of Vietnam and organization is indicated on Chart 2.

NOTE 3: The 5th ROK Marine Brigade is currently deployed in a defensive role along the DMZ on the Kimpo Peninsula. It is administratively controlled by HQ, ROKMC but is under the operational control of I Corps (Group), Eighth U. S. Army. It is considered the Brigade would be fixed in position in the event of open hostilities in Korea and could not be readily redeployed without major adjustment in combat unit locations within the the United Nation Command during peacetime. The Brigade was initially formed from the assets of the 1st ROKMC Division and represents those units which the division is minus at this time. The current organization of the 5th Brigade is indicated on Chart 3.

NOTE 4: The 1st ROKMC Division (-) located at Pohang is administratively controlled by HQ, ROKMC and under the operational control of Commander, Naval Forces Korea. It is designated as the strategic Reserve for the Defense of the ROK. The organization for the Division (-) is indicated on Chart 4. It should be noted that the Amphibian Tractor Battalion is presently equipped with the LVT-3C.

MARINE ISLAND SECURITY UNIT (MISU)

COMMANDING OFFICER: BGEN HUR HONG

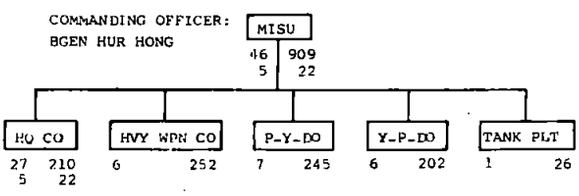

CHART #1

5TH ROK MARINE BRIGADE

COMMANDING GENERAL: BGEN KIM, Suk Ku

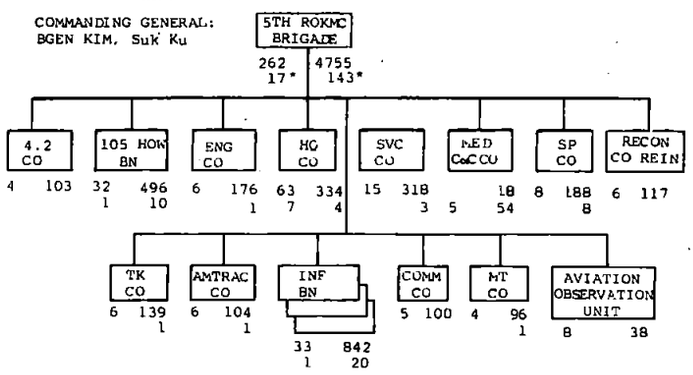

CHART #3

2D ROK MARINE BRIGADE

Strength: 6,109 (JUN71)

COMMANDING GENERAL: MGEN LEE, Dong Yong

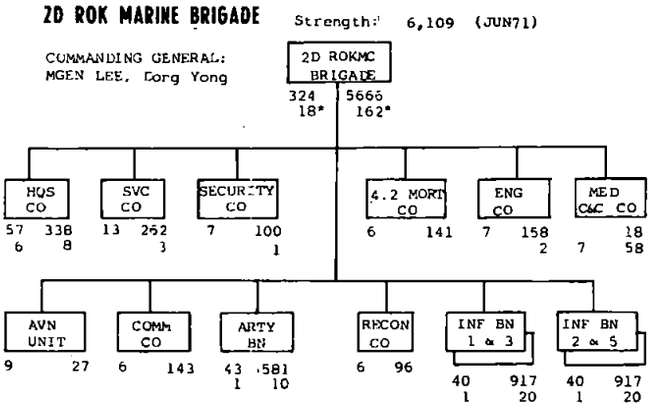

CHART #2

FIRST ROK MARINE DIVISION (-)

COMMANDING GENERAL: MGEN KIM, YUN SANG

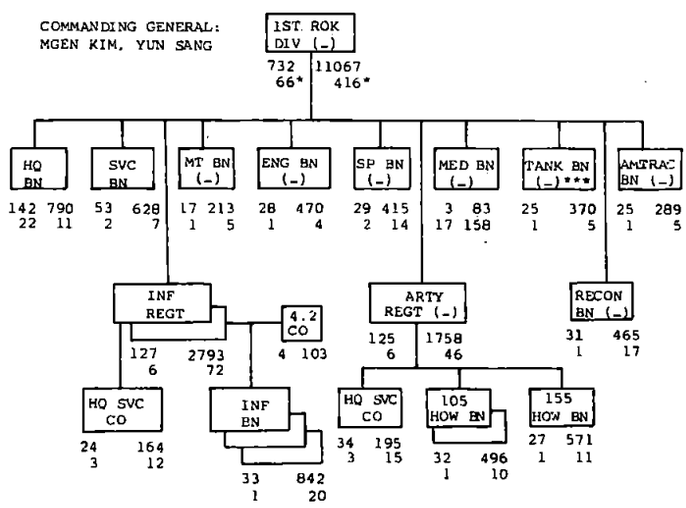

CHART #4

* Second line of figures under each block indicates ROK Navy personnel.

** Minus includes 1 Co Tanks assigned 5th Brigade and 1 Platoon Tanks attached MISU.

Unclassified

UNCLASSIFIED

TAB 48-1

UNCLASSIFIED
[redacted]

[redacted]

MARINE CORPS COMMAND CENTER

INCREMENT VII

REDEPLOYMENT OF USMC UNITS FROM RVN

14 JULY 1971

UNIT	NOTE	STRENGTH		EQUIPMENT	STANDOWN/EDD OR ATD (AS DTG) 3	DESTINATION	ETA OR ATA (AS DTG) 3	SHIPPING
		PROGRAM XII	SEA LIFT					
EMBARK UNIT I			229			**CONUS**		USS TULARE LKA-112) USS FREDERICK(LST 1184)
1ST BN, 1ST MAR		1157	155		031530ZMAY71	CAMPEN	191600ZMAY71	TULARE
HQ BTRY & BTRY A, 1STBN, 11THMAR	1	130	25		021000ZMAY71	CAMPEN	211800ZMAY71	FREDERICK
VMA(AW)-225	10	304	48		031530ZMAY71	EL TORO	191600ZMAY71	TULARE
DET, FLC	1		1		031530ZMAY71 021000ZMAY71	CAMPEN	191600ZMAY71 211800ZMAY71	TULARE FREDERICK
EMBARK UNIT II			343			**HAWAII/ CONUS**		USS OGDEN (LPD-5)
3D BN, 1ST MAR		1157	163		130230ZMAY71	CAMPEN	301500ZMAY71	OGDEN
HQCO, 1ST MAR		220	34		130230ZMAY71	CAMPEN	301500ZMAY71	OGDEN
DET, HQBN, 1ST MARDIV		60	5		130230ZMAY71	CAMPEN	301500ZMAY71	OGDEN
1ST IT	2	6	1		130230ZMAY71	CAMPEN	301500ZMAY71	OGDEN
DET, HQ BTRY, 11TH MAR		57	8		130230ZMAY71	CAMPEN	301500ZMAY71	OGDEN
1ST BN (-), 11TH MAR		399	83		130230ZMAY71	CAMPEN	301500ZMAY71	OGDEN
DET, 1ST RADIO BN		85	12		130230ZMAY71	HAWAII	241900ZMAY71	OGDEN
HMM-262 (-)		247	5		130230ZMAY71	HAWAII	241900ZMAY71	OGDEN
HMM-263 (-)	11	248	5		130230ZMAY71	QUANTICO	301500ZMAY71	OGDEN
CO A, 1ST RECON BN		131	24		130230ZMAY71	CAMPEN	301500ZMAY71	OGDEN
DET, 7TH ENGR BN			3		130230ZMAY71	CAMPEN	301500ZMAY71	OGDEN
EMBARK UNIT III			28			**HAWAII/ CONUS**		USS IWO JIMA (LPH-2)
DET, HMM-262	1/13		22	37/CH-46D	191731ZMAY71	HAWAII	020650ZJUN71	IWO JIMA
DET, HMH-463	1/13		4	3/CH-53D 4/UH-1E	191731ZMAY71	QUANTICO	071745ZJUN71	IWO JIMA
DET, FLC	1		1	2/C-117D	191731ZMAY71	CAMPEN/ HAWAII	071745ZJUN71	IWO JIMA
DET, HQ BTRY, 11TH MAR			1		191731ZMAY71	CAMPEN	071745ZJUN71	IWO JIMA
EMBARK UNIT IV			65			**JAPAN/OKI**		USS DUBUQUE (LPD-8)
VMA-311		216	61		220315ZMAY71	IWAKUNI	262130ZMAY71	DUBUQUE
3D ITT		11	2	2/CH-53D	220315ZMAY71	OKINAWA	250600ZMAY71	DUBUQUE
3D CIT		16	2		220315ZMAY71	OKINAWA	250600ZMAY71	DUBUQUE
EMBARK UNIT V			50			**HAWAII/ CONUS**		USS SUMTER (LST-1181)
DET, FLC	1		50		231200ZMAY71	HAWAII/ CAMPEN	101800ZJUN71 181600ZJUN71	SUMTER
EMBARK UNIT VI			48			**CONUS**		USS SCHENECTADY (LST-1185)
3D 8" HOW BTRY	2	222	33		240900ZMAY71	29 PALMS	192100ZJUN71	SCHENECTADY
DET, FLC	1		15		240900ZMAY71	CAMPEN	192100ZJUN71	SCHENECTADY
EMBARK UNIT VII			47			**HAWAII/ CONUS**		USS OKINAWA (LPH-3)
DET, HMH-463	1		38	13/CH-53D	261330ZMAY71	HAWAII	101800ZJUN71	OKINAWA
DET, VMO-6		53		1/OV-10A	261330ZMAY71	HAWAII	101800ZJUN71	OKINAWA
DET, HML-167	1		7	8/UH-1E	261330ZMAY71	NEW RIVER	161700ZJUN71	OKINAWA
DET, FLC	1,6		2	1/A-4	261330ZMAY71	CAMPEN	161700ZJUN71	OKINAWA
EMBARK UNIT VIII			217			**CONUS**		USS DENVER (LPD-9)
2D BN, 1ST MAR		1157	174		011400ZJUN71	CAMPEN	260001ZJUN71	DENVER
BTRY B, 1ST BN, 11TH MAR	1	130	20		011400ZJUN71	CAMPEN	260001ZJUN71	DENVER
MASS-3	8	207	21		011400ZJUN71	EL TORO	260001ZJUN71	DENVER
DET, FLC	1,6	1000	2		011400ZJUN71	CAMPEN	260001ZJUN71	DENVER
▶ **EMBARK UNIT IX**			116			**HAWAII/ CONUS**		USS TUSCALOOSA (LST-1187) USS DURHAM (LKA-114)
▶ H&MS-11	1	401	32		101100ZJUN71 060800ZJUN71	EL TORO	021400ZJUL71 021500ZJUL71	DURHAM TUSCALOOSA
▶ MABS-11	1	390	48		101100ZJUN71 060800ZJUN71	EL TORO	021400ZJUL71 021500ZJUL71	DURHAM TUSCALOOSA
HMH-463 (-)		236	3		101100ZJUN71	HAWAII	241700ZJUN71	DURHAM
HML-167 (-)		229	17		101100ZJUN71	NEW RIVER	021400ZJUL71	DURHAM
DET, H&MS-16					101100ZJUN71	SANTA ANA	021400ZJUL71	DURHAM
DET, MABS-16			15		101100ZJUN71	SANTA ANA	021400ZJUL71	DURHAM
DET, FLC					101100ZJUN71	CAMPEN	021400ZJUL71	DURHAM
HQCO, 3D MAB			1		101100ZJUN71	HAWAII	241700ZJUN71	DURHAM

Unclassified

UNCLASSIFIED [redacted]

[redacted]UNCLASSIFIED

MARINE CORPS COMMAND CENTER
INCREMENT VII

REDEPLOYMENT OF USMC UNITS FROM RVN

[redacted]

14 JULY 1971

UNIT	NOTE	STRENGTH PROGRAM XII	STRENGTH SEA LIFT	EQUIPMENT	STANDOWN/EOD OR ATD (AS DTG) 3	DESTINATION	ETA OR ATA (AS DTG) 3	SHIPPING
EMBARK UNIT X			37			OKI/ HAWAII		USS ST. LOUIS (LKA-116) USS DUBUQUE (LPD-8)
HML-367	12/15	228	29	7/UH-1E	160244ZJUN71	OKINAWA	190408ZJUN71	DUBUQUE
MATCU-68		68	6		160244ZJUN71	OKINAWA	190408ZJUN71	DUBUQUE
HQ, 3D MAB	6	369	2		241900ZJUN71	HAWAII	131800ZJUL71	ST. LOUIS
EMBARK UNIT XI			835			HAWAII/ CONUS		USS MANITOWOC (LST-1180)
DET, COMM SPT CO, 7TH COMM BN	1				201145ZJUN71	HAWAII	11JUL71	MANITOWOC
DET, H&MS-16	1		2		201145ZJUN71	SANTA ANA	17JUL71	MANITOWOC
DET, MABS-16	1		81		201145ZJUN71	SANTA ANA	17JUL71	MANITOWOC
EMBARK UNIT XII			58			CONUS		USS MANITOWOC (LST-1180) USS PEORIA (LST-1183)
CO A, 1ST ENGR BN		234	35		220700ZJUN71	CAMPEN	091500ZJUL71	PEORIA
CO A, 1ST MT BN		82	12		220700ZJUN71	CAMPEN	091500ZJUL71	PEORIA
CO C, 1ST SP BN		76	11		220700ZJUN71	CAMPEN	091500ZJUL71	PEORIA
H&MS-16 (-)	15	458			201145ZJUN71	SANTA ANA	17JUL71	MANITOWOC
MABS-16 (-)		571			201145ZJUN71	SANTA ANA	17JUL71	MANITOWOC
EMBARK UNIT XIII			85			HAWAII/ CONUS		USS DEFIANCE (LSD-31) USS ST. LOUIS (LKA-116) USS FREDERICK (LST-1184)
CO A(REIN), 7TH ENGR BN		284	40		221040ZJUN71	29 PALMS	18JUL71	PT. DEFIANCE
COMM SPT CO (-), 7TH COMM BN		201	34		241900ZJUN71	HAWAII	131800ZJUL71	ST. LOUIS
CO A, 1ST MED BN		30	4		221040ZJUN71	CAMPEN	18JUL71	PT. DEFIANCE
DET, FLC	1,6				221040ZJUN71 231130ZJUN71	HAWAII/ CAMPEN	092045ZJUL71 091500ZJUL71	PT. DEFIANCE FREDERICK
DET, 5TH COMM BN	2	34	5		221040ZJUN71	CAMPEN	18JUL71	PT. DEFIANCE
5TH CIT		16	2		221040ZJUN71	CAMLEJ	18JUL71	PT. DEFIANCE
EMBARK UNIT XIV			131			CONUS		USS FREDERICK(LST-1184) USS ST.LOUIS (LKA-116)
1ST MP BN	2	585	100		231130ZJUN71	CAMPEN	091500ZJUL71	FREDERICK
FLC (-)	6	1217	31		241900ZJUN71	CAMPEN	19JUL71	ST. LOUIS
MISC								
CAPS	9	476			1MAY/			
CACO HQ	9	48			1MAY/			
CAG HQ	9	76			1MAY/			
DET, 11TH DENTAL CO	7	2			7JUN/	IWAKUNI		
DET, VMGR-152	7	64			17JUN/	OKINAWA		
NON-FMF SPACES TO BE DELETED IN RVN								
TDY	5	1			8JUN			
STRAAD FLD TEAM	5	1			8JUN			
MAW NAESU LN	5	2			8JUN			
NAVY/MC JUD ACT	5	1			15JUN			
TOTAL	14	13,593						

USMC ELEMENTS IN RVN AFTER 1 JUL 71

THE FOLLOWING IS A LIST OF USMC OSD PROGRAM XII SPACES REMAINING IN RVN AFTER 1 JULY 1971.

NAVFORV	5
HQ STAFF MACV	49
JUSPAO	4
SAE	2
I CORPS	3
NAV ADV GRU	80
SOG	17
AID DEPT STATE	3
DEF COM AGCY	11
SUB UNIT 1, 1ST ANGLICO	180
EMBASSY SECURITY	156
CORDS	5
NOG DET VOV-10	21
DCPG LNO	3
DET, H&HS-18	20
DOD SPEC REP	3
ROK LOG TEAM	13
CREDIT ACCOUNT	60
MEDTC	1
WESTPAC TRANS OFF	1
TOTAL	637

NOTES:

1. PROGRAM XII SPACE REDUCTIONS FOR THIS DETACHMENT REFLECTED WITH PARENT UNIT DEPLOYING IN ANOTHER EMBARKATION UNIT.
2. UNIT TO BE DEACTIVATED AT DESTINATION.
3. THE DTGs IN THIS COLUMN INDICATE ACTUAL TIME OF DEPARTURE/ARRIVAL AND ARE IN ZULU TIME.
4. UNASSIGNED
5. THIS UNIT HAS NO EMBARKATION REQUIREMENT. SPACES WILL BE ADMINISTRATIVELY DROPPED ON DATE SHOWN.
6. SPACES TO BE DEACTIVATED IN RVN.
7. UNIT DEPLOYED BY ORGANIC AIR 27 JUNE 1971.
8. UNIT TRANSFERRED 68 PROGRAM XII SPACES TO DET, MASS-2 AT IWAKUNI, JAPAN UPON EMBARKATION.
9. 2D CAG DEACTIVATED IN RVN 171500ZMAY71.
10. UNDER THE CODE NAME TRANSPAC KEY UNCLE, VMA(AW)-225 FERRIED 12/A-6A TO EL TORO AND 2 F-4B TO MIRAMAR. TRANSPAC KEY UNCLE COMPLETED 11MAY71.
11. EIGHT PERSONNEL AND 10/CH-46D HELICOPTERS, ALONG WITH OTHER MISCELLANEOUS HEAVY EQUIPMENT FROM HMM-263, REDEPLOYED TO OKINAWA ABOARD THE USS DUBUQUE, DEPARTED DANANG AT 050730ZMAY71. ARR OKINAWA 080600ZMAY71.
12. FOUR PERSONNEL AND ONE AH-1J AIRCRAFT, ALONG WITH OTHER MISCELLANEOUS HEAVY EQUIPMENT FROM HML-367, REDEPLOYED TO TO OKINAWA ABOARD THE USS DUBUQUE, DEPARTED DANANG AT 050730ZMAY71. ARR OKINAWA 080600ZMAY71.
13. IWO JIMA OFF LOAD AT HAWAII 30/CH-46D, AND AT SAN DIEGO 7/CH-46D, 3/CH-53D AND 4/UH-1E.
14. OF THE TOTAL OF 13,593, THREE SPACES WERE CREDITED TO THE MARINE CORPS DEBIT/CREDIT ACCOUNT. THEREFORE, MARINE CORPS AUTHORIZED STRENGTH IN RVN IS REDUCED BY A TOTAL OF 13,590 SPACES, LEAVING 637 SPACES ON 1 JULY 1971.
15. USS DUBUQUE WITH PERSONNEL FROM H&MS-16 (10 USMC), HML-367 (1 USMC), AND FLC (19 USMC) WITH 22/AH-1G HELICOPTERS, ALONG WITH OTHER MISCELLANEOUS HEAVY EQUIPMENT FROM FLC, REDEPLOYED TO SUBIC, DEPARTED DANANG AT 311730ZMAY71. ARRIVED SUBIC 021234ZJUN71.

Unclassified

TAB 11-2

UNCLASSIFIED[redacted]

[redacted]ASSIFIED

MARINE CORPS COMMAND CENTER

TABLE OF CONTENTS

21 JULY 1971

SECTION I - MARINE CORPS FORCES - WORLD WIDE	LIST OF EFFECTIVE TABS	DATE OF LASTEST CHANGE
ALLOCATION OF MARINE CORPS PERSONNEL	11	23JUN71
SELECTED PERSONNEL AND AIRCRAFT DATA	12	21JUL71 ●
UNITED STATES MARINE CORPS RESERVE	13-1	30DEC70
	13-2	23DEC70
	13-3	7JUL71
	13-4	23DEC70
MISCELLANEOUS NON-FMF UNITS	14-1	14JUL71
(MARINE BARRACKS)	14-2	30JUN71
(MARINE SECURITY GUARD BATTALION)	14-3	14APR71
(MARINE DETACHMENTS AFLOAT)	14-4	14APR71
	14-5	30JUN71
SECTION II - STATUS OF FLEET MARINE FORCES		
STATUS OF FMF UNITS	21-1	21JUL71●
	21-2	21JUL71●
	21-3	21JUL71●
	21-4	21JUL71●
	21-5	14JUL71
	21-6	21JUL71●
	21-7	21JUL71●
	21-8	21JUL71●
	21-9	21JUL71●
RECAPITULATION OF FMF ACTUAL STRENGTHS	22	21JUL71●
DISTRIBUTION OF MAJOR GROUND EQUIPMENT AND AIRCRAFT	23	21JUL71●
SECTION III - DISPOSITION OF FLEET MARINE FORCE UNITS		
FLEET MARINE FORCE DISPOSITION, DISTRIBUTION BY BATTALION/ SQUADRON AND MOVEMENTS	31-1 missing	21JUL71
	31-2	21JUL71●
FMF PACIFIC UNIT LOCATIONS AND STRENGTHS (MIDPAC/EASTPAC)	32	21JUL71●
FMF PACIFIC UNIT LOCATIONS, STRENGTHS AND OSD CEILING CONSIDERATIONS (WESTPAC)	33	21JUL71●
LANDING FORCES - 7TH FLEET	34	14JUL71
FMF ATLANTIC UNIT LOCATIONS AND STRENGTHS	35	14JUL71
LANDING FORCES - MEDITERRANEAN AND CARIBBEAN	36-1	14JUL71
GUANTANAMO BAY BATTALION	36-2	14JUL71
SECTION IV - GENERAL		
CHRONOLOGY OF SIGNIFICANT EVENTS	41-1	17MAR71
	41-2	21MAR71
	41-3	23JUN71
	41-4	16JUN71
	41-5	21JUL71
STATISTICAL SUMMARY OF III MAF OFFENSIVE OPERATIONS IN VIETNAM	42-1	21APR71
	42-2	18NOV70
	42-3	18NOV70
	42-4	10MAR71
	42-5	12MAY71
	42-6	12MAY71
LANDING FORCES - 7TH FLEET; SUMMARY OF OPERATIONS IN RVN	43-1	18NOV70
	43-2	18NOV70
	43-3	18NOV70
U.S. MARINE CORPS AIRCRAFT LOSSES IN SEASIA	44-1	18NOV70
	44-2	18NOV70
	44-3	18NOV70
	44-4	18NOV70
	44-5	18NOV70
	44-6	18NOV70
	44-7	18NOV70
	44-8	18NOV70
	44-9	25NOV70
	44-10	5MAY71
	44-11	5MAY71
USMC/ENEMY CASUALTIES IN SEASIA; CUMULATIVE DOD CASUALTY FIGURES ON U.S. MILITARY PERSONNEL AND COMPARATIVE USMC/ENEMY KIA IN CONNECTION WITH THE CONFLICT IN RVN	45-1	21JUL71●
	45-2	21JUL71●
	45-3	26MAY71
	45-4	30JUN71
DISPOSITION AND STRENGTH OF MAJOR U.S. AND FW FORCES IN RVN	46-1	14JUL71
	46-2	21JUL71●
COMUSMACV STAFF, PRINCIPAL MARINE OFFICERS HQ MACV	47	7JUL71
REPUBLIC OF KOREA MARINE CORPS	48-1	14JUL71 (21 JULY 71)
REPUBLIC OF VIETNAM MARINE CORPS	48-2	7JUL71
VIETNAM GEOGRAPHIC AND CLIMATE DATA	49-1	18NOV70
	49-2	18NOV70
CHRONOLOGY OF FMF DEPLOYMENT AND STRENGTH IN RVN	410-1	20JAN71
	410-2	25NOV70
	410-3	25NOV70
	410-4	25NOV70
	410-5	25NOV70
	410-6	25NOV70
	410-7	9DEC70
	410-8	10MAR71
	410-9	28APR71
	410-10	23JUN71
	410-11	21JUL71●
	410-12	21JUL71●
REDEPLOYMENT OF USMC UNITS FROM RVN	411-1	21JUL71 (FINAL)●
	411-2	21JUL71 (FINAL)●

CONTENTS OF THIS PUBLICATION
DOWNGRADED AT 3 YEAR
INTERVALS
DECLASSIFIED AFTER 12 YEARS

DOD DIR 5200.10

Unclassified

[redacted]UNCLASSIFIED

MARINE CORPS
JUL 21 1971
REFERENCE BRANCH

Unclassified

[redacted] UNCLASSIFIED

MARINE CORPS COMMAND CENTER

SELECTED PERSONNEL AND AIRCRAFT DATA

PERSONNEL

21 JULY 1971

		STRENGTH	PERCENT USMC	PERCENT FMF	PERCENT FMFPAC
USMC TOTAL	*	212,339	100.00		
FLEET MARINE FORCES		99,981	47.09	100.00	
FMF ATLANTIC	#	38,863	18.30	38.87	
FMF PACIFIC	#	61,118	28.79	61.13	
VIETNAM	**	507 ¢	00.24		

SOURCE: * HQMC 1018-20 (ESTIMATED PERSONNEL DATA) AS OF 29JUN71.
** HQMC MANPOWER FIGURES INDICATE THAT USMC PERSONNEL STRENGTH IN RVN IS 585 AS OF 10JUL71. THE DIFFERENCE IN PERSONNEL STRENGTH IS CURRENTLY BEING RESOLVED BETWEEN COMUSMACV AND HQMC.
# MARES FORSTAT REPORT DATED 7JUL71.
¢ MACV WEEKLY STRENGTH REPORT AS OF 15JUL71.

AIRCRAFT

21 JULY 1971

		FIXW	HELO	TOTAL	PERCENT USMC	PERCENT FMF	PERCENT FMFPAC
USMC TOTALS	**	975	616	1,591	100.00		
FLEET MARINE FORCES	@	692	579	1,271	79.89	100.00	
FMF ATLANTIC	@	311	278	589	37.02	46.34	
FMF PACIFIC	@	381	301	682	42.87	53.66	

SOURCE: ** DC/S AIR STATUS BOARD PHOTO AS OF 26MAR71.
@ MARES FORSTAT REPORT DATED 7JUL71.

TAB 12

[redacted]

Unclassified

UNCLASSIFIED

UNCLASSIFIED
S[redacted]

MARINE CORPS COMMAND CENTER

STATUS OF FMF UNITS **

21 JULY 1971

UNIT *	NOTE	UNIT COMMANDER	LOCATION	STRENGTH USMC	STRENGTH USN	UNIT READINESS ☆ CURRENT RATE	RSN	P	S	R	T	EXPECTED RATE	EXPECTED BY	MAJOR EQUIPMENT
FMF				99981	2825									
MIDPAC				5715	758									
FMFPAC		LTGEN W. K. JONES	HAWAII	61118	1781	C1		1	1	1	1			
HQ FMFPAC				1047	36									
H&SBN		COL R. G. LAUFFER	CP SMITH	980	27	C1		1	1	1	1			
DET 2, 21ST DENTAL CO (-)		CAPT M. R. HAMILTON(USN)			9	C1		1	1	1	1			
HQ SQDN		LTCOL C. E. DORFFELD	KANEOHE	63		C4	P	4	1	1	1	C4	710731	5/T-28B, 2/UH-34D, 1/US-2B 1/VH-34D
1ST ANGLICO (-)		MAJ J. B. LEONARD	SDIEGO	153	3	C4	S	2	4	2	1	C3	710601	
SU 1, 1ST ANGLICO (MACV)	*	LTCOL E. E. SHOULTS	SAIGON	197	10	C1		1	1	1	1			
1ST RADIO BN		LTCOL E. D. RESNIK	KANEOHE	422		C1		1	1	1	1			
1ST MARINE BRIGADE		BGEN V. A. ARMSTRONG	KANEOHE	3896	109	C4	P	4	3	3	3	C3	711031	
H&S CO		CAPT H. J. TRAUTWEIN, JR		251	14	C1		1	1	1	1			
1ST ITT		CAPT T. E. NADOLSKI		14		C1		1	1	1	1			
11TH CIT (CADRE) (FMFPAC)	*	CAPT K. W. CLEM				C4	N	5	5	5	5			
DET 1, 21ST DENTAL CO (-)		CDR J. D. CRAWFORD(USN)		15		C1		1	1	1	1			
3D MARINES (-) (REIN)		LTCOL K. L. CHRISTENSEN	KANEOHE			C4	P	4	4	4	4	C3	711030	
HDCO (-)		CAPT C. S. CERTAIN		182	19	C4	P	4	4	4	4	C3	710930	
1ST BN		MAJ P. J. KIESELBACH		963	51	C4	P	4	1	1	4	C4	710801	6/105 HOW TD, 8/106MM RR, 8/81 MORT
2D BN		MAJ F. W. BEEKMAN		118		C4	P	4	3	3	4	C3	711231	8/106MM RR, 8/81 MORT
CO A, 3D ENGR BN (-)		CAPT R. I. EDWARDS		107		C3	P	3	3	3	2	C2	711201	
CO A (REIN), 3D MT BN (-)		CAPT R. E. MANUEL		16		C4	P	4	2	2	4	C3	711215	
CO A (REIN), 3D SP BN (-) (CADRE)						C4	P	4	2	3	4	C3	711130	
CO A, 3D RECON BN (-) (REIN) (CADRE)						C4	P	4	4	4	4	C3	711031	
CO A (REIN), 3D MED BN (-) (CADRE)														
1ST BN (-), 12TH MAR		MAJ L. E. KOLEBER	KANEOHE			C4	P	4	2	3	4	C3	711031	12/105 HOW TD
CO D, 3D AMTRAC BN (-)		CAPT K. R. BURNS		144		C4	P	4	1	1	4	C3	710930	3/LVTP-5 COMD, 44/LVTP-5, 1/LVTR
COMM SPT CO, 7TH COMM BN(-)		MAJ R. T. HIMMERICH												
PROV SERV BN		MAJ R. E. LANGTON		211		C4	P	4	4	4	4	C3	710930	
MAG-24		COL R. E. CAREY	KANEOHE	1875	25	C3	X	4	2	3	4	C3	710915	
H&MS-24		LTCOL C. L. PHILLIPS		448		C3	S	2	3	3	2	C2	710901	1/C-117D, 5/CH-46A, 2/TA-4F
MABS-24		LTCOL W. R. LEOBLTTER		343	25	C4	P	4	2	2	2	C3	710915	
MATCU-70		WO O. F. GOUR, JR.		38		C4	P	4	2	1	4	C3	710801	
VMFA-122		LTCOL L. FURSTENBERG		166		C4	P	4	1	4	4	C3	710901	8/F-4B
VMFA-212		LTCOL R. D. REVIE		209		C3	X	4	1	3	3	C2	710704	12/F-4J
VMFA-235		LTCOL F.L. PARRELL, JR.		227		C3	X	4	1	1	4	C2	710630	16/F-4J
MACS-2		LTCOL P. L. ELLIOTT		174		C4	R	4	3	4	3	C3	710801	
HMM-262		LTCOL F. K. WEST, JR.		159		C4	P	4	1	4	4	C3	710930	30/CH-46D
HMH-463		MAJ M. E. EDWARDS		111		C4	P	4	4	4	4	C4	710825	18/CH-53D
DET, VMO-6 (-)														6/OV-10A
DET, HML-367 (-)														8/UH-1E
WESTPAC				26587	769									
FMFPAC														
III MAF		LTGEN D. J. ROBERTSON	CP COURTNEY	26587	769									
H&S CO				131		C1		1	1	1	1			
3DMARDIV(-)(REIN) (III MAF)	*	MAJGEN L. METZGER	CP COURTNEY	14525	580	C2	T	1	1	1	2	C1	710705	
HQBN		COL H.A.F.J VONDERHEYDE		1552	41	C2	X	1	1	2	2	C2	720601	
3D ITT	22	CAPT M. R. LAMB												
11TH ITT	22	CAPT C. K. ABLES												
15TH ITT	22	CAPT E. R. KRAMER	CP HANSEN											
17TH ITT	22	CAPT G. H. JOHNSON, JR.												
SCAMP	22													
3D CIT		CAPT R. E. SHROYER		14		C1		1	1	1	1			
1ST SSCT		CAPT T. L. STROHECKER		8		C3	S	1	3	1	1	C1	710805	
3D DENTAL CO		CAPT W. J. KENNEDY(USN)		4	66	C1		1	1	1	1			

* PARENTHETIC UNIT INDICATES OPCON WHEN DIFFERENT FROM ORGANIZATIONAL STRUCTURE.

TAB 21-1

UNCLASSIFIED
Unclassified

S[redacted] UNCLASSIFIED

MARINE CORPS COMMAND CENTER

STATUS OF FMF UNITS**

21 JULY 1971

UNIT *	NOTE	UNIT COMMANDER	LOCATION	STRENGTH USMC	STRENGTH USN	UNIT READINESS ☆ CURRENT RATE	RSN	P	S	R	T	EXPECTED RATE	BY	MAJOR EQUIPMENT
4TH MARINES	24	COL R. T. HANIFAN JR.	CP HANSEN			C2	T	2	1	1	2	C2	720601	
HQCO		MAJ R. P. LUSK		219	6	C2	T	1	1	2	2	C2	710601	
1STBN		LTCOL D. G. ROBISON		1043	43	C2	P	2	1	1	2	C1	710825	8/106MM RR, 8/81 MORT
2DBN		LTCOL W. H. NULTY		1011	35	C2	P	2	1	2	2	C1	710930	8/106MM RR, 8/81 MORT
3DBN	1	LTCOL A. J. CASTELLANA		1043	38	C2	P	2	1	1	2	C1	710930	8/106MM RR, 8/81 MORT
9TH MARINES		COL J. V. MCLERNAN	CP SCHWAB			C2	T	1	1	1	2	C2	710805	
HQCO		CAPT M. H. CRAFTON, JR.		222	5	C2	R	1	1	2	2	C1	710930	
1STBN		LTCOL F.W.M.WOODROW,JR.		992	36	C1		1	1	1	1			8/106MM RR, 8/81 MORT
2DBN (31ST MAU)	2*	LTCOL F. J. JOHNSON,JR.	31ST MAU	1039	34	C2	T	1	1	1	2	C1	710707	8/106MM RR, 8/81 MORT
3DBN		LTCOL B. S. SNELL	CP SCHWAB	1041	40	C2	P	2	1	1	2	C1	711105	8/106MM RR, 8/81 MORT
12TH MARINES (-)		COL J. P. O'CONNELL	CP HANSEN			C2	T	1	1	1	2	C1	710825	
HQ BTRY (-)		CAPT D. J. LABOISSIERE		229	6	C2	T	1	1	2	2	C1	710825	
2DBN	7	MAJ R. S. VARNEY		534	14	C2	T	1	1	1	2	C2	710605	36/105 HOW TD
3DBN		LTCOL W. J. HALLISEY		508	15	C2	T	1	1	1	2	C1	710705	24/105 HOW TD
4THBN (-) (REIN)		LTCOL K. G. PATTERSON		504	11	C2	P	2	1	2	2	C2	710830	1/M51 VTR, 17/155 HOW SP
3D PLAT, 1ST 8" HOW BTRY	4													2/8" HOW SP
3D SERV BN (-)		COL D. J. HUNTER	CP HANSEN	769	27	C2	T	1	1	1	2	C1	710825	
3D TANK BN (-)	7	LTCOL C. R. STIFFLER		624	13	C2	X	1	1	1	2	C2	720601	58/M48 TANK, 5/M51 VTR 8/M67 TANK
9TH MT BN (-)		MAJ J. R. TRAYLOR		318	7	C2	X	1	1	1	1	C1	710805	
3D MED BN (-)		LTCOL F. E. CLARK, JR.		142	39	C3	S	3	3	3	2	C2	710911	
1ST HOSPITAL CO (CADRE)		LTJG H.D. CASH (USN)	CP SCHWAB	28	16	C4	P	4	1	2	4	C4	711231	
3D MT BN (-)		MAJ B. L. PARKS		190	7	C1		1	1	1	1			
3D RECON BN (-)	7	LTCOL T. R. STUART		347	25	C2	P	2	1	1	2	C1	710706	
3D ENGR BN (-) (REIN)	17	LTCOL C. R. GIBSON		709	8	C2	T	2	1	2	2	C1	720630	
CO D (REIN),7TH ENGR BN(-)		MAJ D. R. COMER	CP HAGUE					5	5	5	5			
BRIDGE PLAT, 1ST BRIDGE CO								5	5	5	5			
7TH COMM BN (-)		LTCOL M. W. MCCOURY	CP SCHWAB	486	7	C2	X	2	1	2	1	C2	720601	
3D SP BN (-)		LTCOL R. L. ANDERTON	CP HAGUE	365	29	C2	X	1	1	2	2	C2	720601	
1ST AMTRAC BN (-)		LTCOL J. G. BUCKMAN	CP SCHWAB	584	12	C2	P	2	2	2	2	C1	710805	5/LVTE-1, 10/LVTP-5 CMD. 97/ LVTP-5, 3/LVTR
1ST MAW (III MAF)	*	MAJGEN R. G. OWENS,JR.	IWAKUNI	8851	139	C2	R	2	2	2	2	C2	711001	
JAPAN (1ST MAW ELEMENTS)				5830	107									
MWHS-1		COL W. C. KELLY	IWAKUNI	819	22	C2	S	2	2	2	1	C2	710601	
7TH CIT (1ST MAW)	*	WO J. A. CANONICO		20		C1		1	1	1	1			
11TH FORCE DENTAL CO (-)		CDR J. J. LYONS (USN)		2	32	C1		1	1	1	1			
3D SSCT		CAPT G. G. MEYERS		12		C2	X	1	1	1	1	C1	710801	
MACG-18 (-)		LTCOL F. L. DELANEY	IWAKUNI			C3	T	2	1	2	3	C2	710524	
H&HS-18 (-)		MAJ L. E. OBENHAUS		231		C2	R	2	2	2	2	C1	710901	
MASS-2 (-)		LTCOL T. G. DAVIS		177		C3	R	1	2	3	2	C2	710615	
MWCS-18		MAJ R. S. KAYE		204		C2	P	2	1	1	1	C1	710620	
MAG-12		COL E. J. RUTTY	IWAKUNI			C2	R	2	2	2	2	C1	710701	
H&MS-12		MAJ D. E. DONOVAN		557		C3	R	1	2	3	2	C2	710901	6/TA-4F
MABS-12		LTCOL J. L. DRIEFER		377	20	C2	R	2	1	2	2	C2	710930	
MATCU-62 (MAG-12)	*	CAPT A. E. PETERS		39		C4	P	4	1	2	3	C3	710901	
VMA-211		LTCOL D. G. GASCOIGNE		209	2	C2	R	2	2	2	2	C1	710915	17/A-4E
VMA-311		LTCOL K. L. BATT		186	1	C2	P	2	2	2	1	C2	711002	24/A-4E
VMA (AW)-533		LTCOL R. P SPRIER		245		C2	R	2	1	2	1	C2	711001	12/A-6A
OTHER														
SU 2, H&MS-36			FUJI											

* PARENTHETIC UNIT INDICATES OPCON WHEN DIFFERENT FROM ORGANIZATIONAL STRUCTURE.

TAB 21-2

[redacted]
UNCLASSIFIED
Unclassified

UNCLASSIFIED
S[redacted]

MARINE CORPS COMMAND CENTER

STATUS OF FMF UNITS **

21 JULY 1971

UNIT *	NOTE	UNIT COMMANDER	LOCATION	STRENGTH USMC	STRENGTH USN	UNIT READINESS ☆ CURRENT RATE	RSN	P	S	R	T	EXPECTED RATE	BY	MAJOR EQUIPMENT
MAG-15		COL R. R. MILLER	IWAKUNI			C2	T	2	2	2	3	C1	710915	
H&MS-15		MAJ M. R. CADY		554		C2	R	1	1	2	1	C1	711001	4/TA-4F
MABS-15		MAJ R. L. BECKWITH		373	21	C2	R	2	1	2	2	C2	710731	
MATCU-60 (MAG-15)	*	1STLT C. R. HICKEY		56		C2	R	2	1	2	2	C1	710801	
VMFA-115		LTCOL R. R. POWELL		289	1	C2	X	2	2	2	3	C2	711001	14/F-4B
VMFA-232		LTCOL J. S. ROSENTHAL		318	1	C2	T	2	1	2	2	C1	710815	15/F-4J
VMCJ-1 (1ST MAW)	*	LTCOL S. S. EISENHAUER		391	1	C3	T	2	1	2	3	C3	710815	6/EA-6A, 9/RF-4B
MWSG-17		COL W. G. MC COOL	IWAKUNI			C3	R	2	2	3	2	C2	710801	
H&MS-17		LTCOL E. W. GILBERT		546	6	C3	R	2	2	3	2	C2	710901	5/C-117D, 3/C-54Q/R/S
WERS-17 (-)		MAJ A. L. FROCCI		225		C2	R	1	2	2	2	C1	710715	
OKINAWA (1ST MAW ELEMENTS)				3021	32									
MAG-36		COL R. J. ZITNIK	FUTEMA			C2	R	1	2	2	1	C2	710924	
H&MS-36 (-)		LTCOL D. A. SPURLOCK		589		C2	R	1	1	2	1	C1	710824	24/CH-46D, 3/UH-1E
SU 1, H&MS-36 (-)		CAPT J. A. WILDER		52		C2	S	1	2	2	1	C1	710730	
MABS-36		LTCOL V. J. GUINEE, JR.		521	24	C2	R	2	1	2	2	C1	710830	
MATCU-66 (MAG-36)	*	CAPT K. R. CLARK		56		C2	P	2	1	2	2	C2	710925	
MATCU-68 (MAG-36)	*	WO L. R. COXE		23		C4	P	4	1	4	4	C3	710924	
HMM-164 (31ST MAU)	2*	LTCOL A. J. KETTERING	31ST MAU	292	3	C2	R	1	1	2	1			13/CH-46D, 4/CH-53D, 4/UH-1E
HMM-165		MAJ D. M. GRIFFAY	FUTEMA	248	1	C3	R	1	2	3	1	C1	710710	20/CH-46D
HMH-462 (-)	2	LTCOL R. E. DYER		253	1	C2	R	1	1	2	1	C3	710901	16/CH-53D
VMO-6 (-)	28	LTCOL J. L. NORTON		206		C2	R	2	1	2	1	C1	710815	14/OV-10A
VMGR-152 (1ST MAW)	*	LTCOL R. W. DUPHINEY		289	1	C4	S	2	4	4	4	C3	710731	9/KC-130F
HML-367 (-)		MAJ R. SANCHO		172		C4	S	4	4	4	4	C3	710715	11/UH-1E, 21/AH-1G, 4/AH-1J
OTHERS														
DET, MASS-2 (-)			FUTEMA											
SU 1, WERS-17 (-)	12	WO E. Q. HICKS		51		C3	S	1	3	3	1	C2	710727	
SU 1, H&MS-12 (-)	27	CAPT J. A. MILLER	NAHA	49		C2	S	1	2	2	2	C1	710730	
MACS-4		LTCOL R. D. MILER	FUTEMA	272	2	C3	P	2	1	2	3	C2	710611	
3D FSR		COL R. E. ROEDER	CP FOSTER	3080	50	C2	R	2	2	2	2	C2	710815	
H&S BN		LTCOL J. B. HARRIS, SR.		1005	24	C2	X	1	2	2	2	C1	710815	
SUPPLY BN		LTCOL J. W. FRIBERG		1164	26	C2	X	3	3	3	3	C2	710815	
NOP, 3D FSR (3D FSR)	*	CAPT C. W. SHIVER		45		C1		1	1	1	1			
MAINT BN		LTCOL H. I. FREY		866		C2	X	3	2	2	3	C2	710815	2/LVTE-1, 1/106MM RR, 1/81 MORT
EASTPAC				28816	854									
FMFPAC														
I MAF		BGEN R. T. DWYER, JR.	CAMPEN			C2	T	2	1	1	2	C2	710515	
H&SCO				21										
1ST MAR DIV (-) (REIN)		BGEN R. T. DWYER, JR.	CAMPEN	14244	515	C4	P	4	2	2	4	C3	710701	
HQBN		COL R. N. BURHANS		1735	60	C4	P	4	2	2	4	C4	711001	
1ST CIT		CAPT B. B. VORONIN		20		C1		1	1	1	1			
5TH ITT	14	CAPT R. A. KAROLY				C1		1	1	1	1			
9TH ITT	14	CAPT L. J. JANSEN				C1		1	1	1	1			
19TH ITT	14	1STLT G. D. JENNINGS				C3	P	3	1	1	3	C2	710930	
21ST ITT	14	2DLT M. M. LINCOLN				C1		1	1	1	1			
23D ITT	14	CAPT R. D. TOMLIN				C1		1	1	1	1			
25TH ITT	14	CAPT H. K. LEE				C2	R	1	1	2	1	C1	710801	
2D SSCT		WO E. L. HANEY		8		C4	R	1	1	4	1	C3	710901	
SCAMP		CAPT A. L. SELLECK, JR.		24										
COMM SPT CO, 9TH COMM BN (-)		CAPT D. B. DOWNING		299		C2	R	1	1	2	1	C2	711001	
DET, 5TH COMM BN (CADRE)	23													
1ST CIVIL AFFAIRS GRP		CAPT R. S. GRISCHKOWSKY		23		C4	P	4	1	1	1	C4	711001	
1ST MARINES		LTCOL M. A. MOORE				C4	X	3	4	4	3	C3	711001	
HQCO		CAPT H. W. GARDNER		189	10	C3	S	1	3	3	2	C2	711001	
1STBN		MAJ T. E. HEMINGWAY		1258	10	C4	R	3	3	4	3	C3	711001	9/106MM RR, 8/81 MORT
2DBN		LTCOL R. E. MOSS		1038	12	C4	S	2	4	3	2	C3	711001	8/106MM RR, 10/81 MORT
3DBN		MAJ N. H. SMITH		1037	27	C3	S	3	3	3	3	C2	711001	8/106MM RR, 8/81 MORT

* PARENTHETIC UNIT INDICATES OPCON WHEN DIFFERENT FROM ORGANIZATIONAL STRUCTURE.

TAB 21-3

S[redacted]
Unclassified
UNCLASSIFIED

UNCLASSIFIED

MARINE CORPS COMMAND CENTER

STATUS OF FMF UNITS**

21 JULY 1971

UNIT *	NOTE	UNIT COMMANDER	LOCATION	STRENGTH USMC	STRENGTH USN	UNIT READINESS☆ CURRENT RATE	RSN	P	S	R	T	EXPECTED RATE	EXPECTED BY	MAJOR EQUIPMENT
3D BN, 3D MARINES (CADRE)		MAJ D. J. O'CONNOR	CAMPEN	112	2	C4	N	5	4	4	5			7/106MM RR
5TH MARINES		LTCOL R. R. BURRITT	CAMPEN			C4	P	4	4	4	4	C4	711001	
HQCO		CAPT J. R. WILLIAMS		88	10	C4	P	4	4	3	4	C4	711001	
1ST BN		MAJ W. T. MACY		132	6	C4	N	4	4	4	4	C4	711001	1/106MM RR, 6/81 MORT
2D BN		MAJ J. A. LINNEMANN		120	4	C4	P	4	4	4	4	C4	711001	
3D BN		CAPT M. B. DARLING		139	7	C4	P	4	4	4	4	C4	711001	8/106MM RR, 8/81 MORT
7TH MARINES		COL A. A. MONTI	CAMPEN			C3	P	3	2	2	3	C3	710901	
HQCO		CAPT W. O. MOORE, JR.		220	8	C2	R	1	2	2	1	C1	710901	
1ST BN (CADRE)		MAJ R. C. HALL		409	7	C4	N	5	4	4	5			8/106MM RR, 8/81 MORT
2D BN		LTCOL T. L. SULLIVAN		1134	44	C2	T	1	1	1	2	C1	710801	8/106MM RR, 7/81 MORT
3D BN		LTCOL R. J. MIILLE		1104	41	C2	T	1	1	1	2	C1	710901	8/106MM RR, 8/81 MORT
11TH MARINES (-)(REIN)		COL W. R. GRUBAUCH	CAMPEN			C4	P	4	3	4	4	O4	711001	
HQ BTRY		1STLT W. T. WILLIAMS		163		C4	P	4	4	4	4	C4	711001	
1ST BN		MAJ H. B. BROOKS III		627	1	C4	P	4	2	4	4	C4	711001	6/M-30 MORT, 12/105 HOW TD, 4/155 HOW TD, 1/81 MORT
2D BN (CADRE)		CAPT R. D. FULCHER		217	2	C4	N	4	4	4	4	C4	711001	
3D BN		MAJ W. A. HALL		657	18	C2	T	1	1	1	2	C1	711001	18/105 HOW TD
1ST MP BN		MAJ W. J. MC CALLUM	CAMPEN	45		C4	N	5	5	5	5			3/81 MORT
1ST MT BN (REIN)		CAPT E. R. WHITING		306	6	C3	R	1	2	3	2	C2	711001	
CO B, 9TH MT BN (-)		CAPT R. F. WILLIAMS		77	1	C2	X	3	1	1	3	C3	710801	
1ST RECON BN		MAJ H. C. COOPER, JR.		267	5	C4	N	4	2	3	4	C4	711001	
1ST FORCE RECON CO		CAPT D. L. COOK		71	3	C4	P	4	2	3	4	C4	711001	
1ST TANK BN (REIN)	18	MAJ G. E. BERBAUM		417	21	C4	P	4	2	2	4	C4	711001	5/M-51 VTR, 7/M-67 TANK, 15/M103 TANK, 25/M48 TANK
CO D, 3D TANK BN (-) (CADRE)														
1ST ENGR BN	26	MAJ H. L. SOLTER, JR.		480	5	C4	N	4	4	4	4	C4	711001	
7TH ENGR BN (-)(REIN)	11	MAJ C. N. WALL		382	14	C4	P	4	2	3	4	C4	711001	
1ST BRIDGE CO (-)(CADRE)		1STLT D. N. TAYLOR, JR.		52		C4	P	4	1	4	4	C4	711001	
1ST SP BN	8	LTCOL T. F. GRAY		247	17	C4	P	4	1	1	4	C4	711001	
3D AMTRAC BN (-)	19	MAJ J. P. SENIK		368	17	C4	P	4	2	2	4	C4	711001	5/LVTE-1, 8/LVTP-5 COMD, 70/LVTP-5, 3/LVTR
1ST SERV BN (REIN)	10	COL G. K. REID		732	33	C4	P	4	2	2	4	C4	710901	
1ST SEARCHLIGHT BTRY (CADRE)								5	5	5	5			
7TH SEP BULK FUEL CO(CADRE)								5	5	5	5			
1ST MED BN (-)		LCDR D.K. LIVINGTON(USN)		44	82	C4	P	4	4	3	4	C4	711001	
1ST DENTAL CO		CAPT J. F. KING (USN)		3	42	C4	R	4	3	4	4	C3	711001	
								5	5	5	5			
FORCE TROOPS FMFPAC		BGEN P. G. GRAHAM	29 PALMS	1495	75	C4	X	4	2	3	3			
HQCO		MAJ E. L. ROTTSOLK		173	9	C1		1	1	1	1			
NOP, 1ST FSR		CAPT T. R. GERIES		49		C1		1	1	1	1			
9TH COMM BN (-)		LTCOL D. J. GARRET		376	12	C4	P	4	2	2	3	C3	710901	
13TH CIT (FORTRPSPAC)	*	CAPT A. G. WILSON		16		C1		1	1	1	1			
21ST DENTAL CO (-)		CAPT G. W. WALTER (USN)		2	21	C4	S	1	4	4	1	C3	711001	
1ST FAG		LTCOL R. O. GILLICK	29 PALMS	19		C4	P	4	2	3	4	C3	710802	
HQ BTRY, 1ST FAG		1STLT G. R. MABRY		132	13	C2	T	1	1	1	2	C1	710802	
1ST 8" HOW BTRY SP (-)		CAPT J. P. FARRELL		136		C3	P	3	2	3	3	C2	710901	1/M-51 VTR, 4/8" HOW SP
1ST 175MM GUN BTRY SP		CAPT M. T. OWENS, JR.		65		C4	P	4	2	4	4	C3	710802	1/M-51 VTR, 6/175 GUN SP
3D 175MM GUN BTRY SP		CAPT D. L. ROSENBERG		94		C4	P	4	3	4	4	C3	710802	1/M-51 VTR, 6/175 GUN SP
4TH BN, 11TH MAR (1ST FAG)	*	LTCOL D. W. SANFORD		304	2	C4	R	4	3	4	4	C3	710802	1/M-51 VTR, 26/155 HOW SP
CO A (REIN), 7TH ENGR BN(-)		CAPT P. A. PANKEY	29 PALMS	107		C4	P	4	1	2	3	C3	710802	
3D HOSPITAL CO (CADRE)		LT W. L. NOCHOLS (USN)		22	18	C4	X	4	4	3	4			

* PARENTHETIC UNIT INDICATES OPCON WHEN DIFFERENT FROM ORGANIZATIONAL STRUCTURE.

TAB 21-4

UNCLASSIFIED
Unclassified

UNCLASSIFIED

MARINE CORPS COMMAND CENTER

STATUS OF FMF UNITS**

21 JULY 1971

UNIT *	NOTE	UNIT COMMANDER	LOCATION	STRENGTH USMC	STRENGTH USN	UNIT READINESS☆ CURRENT RATE	RSN	P	S	R	T	EXPECTED RATE	BY	MAJOR EQUIPMENT
MHTG-30		COL R. BIANCHI	SANTA ANA			C2	R	1	1	2	1	C1	710901	
H&MS-30		MAJ D. G. DUNLAP		290	1	C1		1	1	1	1			5/CH-46F, 3/CH-53A
HMHT-301		MAJ D. A. DALRYMPLE		171		C2	P	2	2	1	1	C1	710901	8/CH-53A
HMMT-302		LTCOL R. G. RITCHIE		188		C1		1	1	1	1			16/CH-46F
MCCRTG-10		COL R. B. SINCLAIR	YUMA			C2	S	1	2	2	1	C2	710630	
H&MS-10		MAJ G. R. CALLISON		424	6	C1		1	1	1	1			
VMFAT-101		LTCOL T. R. MOORE		375	4	C3	R	1	3	3	1	C2	711030	22/F-4B
VMAT-102		LTCOL R. D. REID		281		C2	S	2	2	2	1	C1	711001	26/A-4E
VMT-103		MAJ B. H. FREEMAN		212	3	C2	R	1	2	2	1	C1	710930	16/TA-4F, 2/TA-4J
1ST FSR		COL H. C. REED	CAMPEN	1564	44	C3	P	3	2	2	3	C2	711001	2/106MM RR, 1/155 HOW TD
H&SBN		MAJ R. E. JOHNSON		408	23	C3	P	3	2	2	3	C2	711001	
SUPPLY BN		LTCOL E. R. PUCKETT		633	21	C3	P	3	2	2	3	C2	711001	
MAINT BN		LTCOL E. E. CREWS		523		C3	P	3	2	2	3	C2	711001	
EAST COAST														
FMFLANT		LTGEN E. E. ANDERSON	NORFOLK	38863	1044	C1		1	1	1	1			
HQ FMFLANT				805	4									
H&SBN		COL L. H. DEVINE		726	4	C2	P	2	1	1	2	C1	710601	
HQ SQDN		LTCOL D. PRUDHOMME		79		C4	N	5	5	5	5			
2D MAR DIV		BGEN R. D. BOHN	CAMLEJ	16407	650	C2	P	2	1	1	2	C3	710930	
HQBN		COL G. R. HERSHEY		1892	39	C2	R	1	1	2	1	C1	710830	
2D ITT	20	MSGT R. L. GONYO												
4TH ITT	20	WO G. L. ANDERSON												
6TH ITT	20	2DLT R. L. LAMBERT												
SCAMP	20													
2D MARINES		COL C. B. REIMAN	CAMLEJ			C2	P	2	1	1	2	C1	710831	
HQCO		CAPT G. W. SCHLITZ		261	5	C1		1	1	1	1			
1ST BN	15	LTCOL A. M. GRAY		1100	18	C3	T	1	1	1	3	C2	710730	8/106MM RR, 8/81 MORT
2D BN	13	LTCOL M. ROJO, JR.		927	19	C3	P	3	1	1	3	C2	710930	8/106MM RR, 8/81 MORT
3D BN (-) (32D MAU)	5*	LTCOL T. J. WILLIS	MED .	945	33	C1		1	1	1	1			8/106MM RR, 8/81 MORT
SU 1, H&SCO, 3D BN (2D MAR)	*	1STLT J. R. LOWEY	CAMLEJ	23		C4	N	5	5	5	5			
6TH MARINES		COL F. R. KRAINCE	CAMLEJ			C2	P	2	1	1	2	C1	710831	
HQCO		CAPT R. J. SNOWDEN		309	6	C1		1	1	1	1			
1ST BN (-)	6	LTCOL T. F. QUALLS	CARIB	849	33	C2	P	2	1	1	1	C1	710930	8/106MM RR, 8/81 MORT
CO A, 1ST BN (-)		MAJ J. D. FOREMAN	CAMLEJ	252	6									
2D BN		MAJ J. F. DELANEY		860	13	C2	P	2	1	1	2	C1	710831	8/106MM RR, 8/81 MORT
3D BN		MAJ S. B. WANNER		997	34	C3	P	3	1	1	1	C2	710930	8/106MM RR, 8/81 MORT
8TH MARINES		COL E. M. YOUNG	CAMLEJ			C2	P	2	1	1	1	C1	710930	
HQCO		1STLT H. L. SAWYER		271	14	C1		1	1	1	1			
1ST BN		LTCOL M. H. IVINS		1004	25	C3	P	3	1	1	2	C2	710930	8/106MM RR, 8/81 MORT
2D BN (-)	9	LTCOL D. O. PAREDES	GTMO	761	26	C2	P	2	1	1	1	C1	710930	8/106MM RR, 8/81 MORT
CO E, 2D BN		CAPT C. O. KELLER	CAMLEJ	194	4	C4	N	5	5	5	5			
3D BN		LTCOL W. H. RICE		999	27	C1	P	3	1	1	1	C2	710930	8/106MM RR, 8/81 MORT
10TH MARINES		COL C. A. WEBSTER	CAMLEJ			C4	P	4	1	1	2	C3	710930	
HQ BTRY		1STLT R. R. HARRIS		275	3	C1		1	1	1	1			
1ST BN		MAJ B. A. MUTCH		461	12	C3	P	3	1	1	1	C2	710930	18/105 HOW TD
2D BN		MAJ J. W. ROSS		388	10	C4	P	4	1	1	2	C3	710930	18/105 HOW TD
3D BN		LTCOL D. E. COOMBE		400	8	C4	P	4	1	1	2	C3	710930	18/105 HOW TD
4TH BN		LTCOL R. W. HEESCH		298	7	C4	P	4	1	1	2	C3	710930	1/M51 VTR, 18/155 HOW SP

* PARENTHETIC UNIT INDICATES OPCON WHEN DIFFERENT FROM ORGANIZATIONAL STRUCTURE.

TAB 21-6

Unclassified

UNCLASSIFIED

[redacted] UNCLASSIFIED

MARINE CORPS COMMAND CENTER

STATUS OF FMF UNITS**

21 JULY 1971

UNIT *	NOTE	UNIT COMMANDER	LOCATION	STRENGTH USMC	STRENGTH USN	UNIT READINESS☆ CURRENT RATE	RSN	P	S	R	T	EXPECTED RATE	BY	MAJOR EQUIPMENT
2D SERV BN		COL S. DAVIS	CAMLEJ	948	21	C2	P	2	1	1	2	C1	710930	
2D MT BN		LTCOL W. S. GERICHTEN		264	5	C2	P	2	1	1	1	C1	710930	
2D ENGR BN		MAJ W. W. WIDENER		641	11	C3	P	3	1	1	3	C2	710930	
2D RECON BN		MAJ G. E. STRICKLAND		441	15	C2	T	1	1	1	2	C1	710831	
2D SP BN		MAJ R. J. KENWORTHY		493	13	C2	P	2	1	1	2	C1	710930	
2D MED BN		LCDR S. STEVENSON (USN)		154	179	C4	P	4	2	2	2	C3	710831	
2D DENTAL CO		CAPT A. P. GIAMMISSO (USN)			64	C2	R	2	1	1	1	C1	710930	
FORTPS, FMFLANT		BGEN J. C. FEGAN	CAMLEJ	5166	146	C2	P	2	1	1	2	C2	711001	
HQCO		MAJ R. M. OTTERAAEN		474		C1		1	1	1	1			
2D CIT		1STLT R. H. OSBON, JR.		16		C1		1	1	1	1			
5TH CIT														
2D FAG		COL W. W. HIXSON	CAMLEJ			C3	T	2	1	1	3	C2	710901	
HQ BTRY, 2D FAG		CAPT D. M. JORDAN		157	5	C1		1	1	1	1			
2D 8" HOW BTRY SP		MAJ G. E. GAUMONT, JR.		160		C2	X	3	1	1	2			1/M51 VTR, 6/8" HOW SP
2D 175MM GUN BTRY		MAJ L. D. VOGLER		119		C3	P	3	1	2	3	C2	710901	1/M51 VTR, 6/155 GUN SP, 6/175 GUN SP
5TH 175MM GUN BTRY SP		MAJ R. R. WRIGHT		147		C2	T	2	1	1	2	C1	710830	1/M51, 6/175 GUN SP
2D TANK BN (-)	25	LTCOL F. E. GRUBE	CAMLEJ	664	12	C3	P	3	1	1	3	C2	711001	17/M103 TK, 53/M48 TK, 5/M51 VTR, 9/M67 TK
2D AMTRAC BN (-)	21	MAJ E. E. GERDING		766	14	C4	P	4	1	1	4	C3	710901	4/LVTE-1, 11/LVTP-5 COMD, 142/LVTP-5, 4/LVTR
8TH COMM BN		LTCOL R. E. HAISLIP		625	9	C2	P	2	1	2	1	C2	710901	
8TH ENGR BN		LTCOL B. A. KAASMANN		714	13	C4	P	4	2	1	3	C2	710728	
8TH MT BN		LTCOL C. W. TONNACLIFF		323	4	C2	P	2	1	1	2	C1	710728	
2D RADIO BN		LTCOL J. T. BRASSFIELD		344	4	C3	P	3	1	2	2	C2	710801	
2D ANGLICO		LTCOL D. E. SCHNEIDER		277	12	C3	T	2	1	1	3	C2	710930	
2D FORCE RECON CO		MAJ B. A. GREENE		138	3	C3	T	1	1	1	3	C2	710825	
2D TOPO CO		WO J. F. MCGRORY		83	1	C3	P	3	1	1	3	C2	710901	
2D BRIDGE CO		1STLT D. C. BELL		121	1	C3	P	3	1	1	3	C2	710901	
2D HOSPITAL CO		LT J. T. LEWIS (USN)		30	21	C4	P	4	1	1	4	C3	710901	
22D DENTAL CO		CAPT W.H.HAGERMAN (USN)		5	36	C4	P	4	1	1	1	C2	710901	
2D SEP SURG CO (CADRE)		LCDR G. H. ASHTON (USN)		3	11	C4	N	5	5	5	5			
9TH SEP BULK FUEL CO (CADRE)														
2D MAW		MAJGEN G. C. AXTELL	CHERPT	14382	217	C2	X	2	2	2	3	C2	711231	
MWHS-2		COL D. G. SWINFORD		688	23	C1		1	1	1	1			
12TH FORCE DENTAL CO		CAPT J. H. SMITH		1	51	C3	P	3	1	1	1	C2	710901	
8TH CIT		WO E. J. JOHNSTON		18		C1		1	1	1	1			
6TH SSCT		1STLT V. E. STROTE		7		C2	R	1	1	2	1	C1	711001	
MATCU-78 FMFLANT)	*	CAPT E. P. BASHER	QUANTICO	45		C3	X	4	1	2	4	C4	710731	
MWSG-27		LTCOL W. L. RICE	CHERPT			C3	P	3	1	2	2	C3	710801	
H&MS-27 (-)		LTCOL E. J. HEISE		724	10	C2	P	2	1	1	2	C1	711209	5/C-117D, 1/C-54S
SU 1, H&MS-27 (-)		CAPT K. D. MCCURRY		42		C1		1	1	1	1			
WERS-27		MAJ R. C. BAGLEY, JR.		195		C3	P	3	1	1	2	C2	711208	
VMGR-252 (2D MAW)	*	LTCOL U. V. STATZER		336	2	C3	X	3	2	2	4	C3	710901	11/KC-130F
MACG-28		COL J. W. LASETER	CHERPT			C2	P	2	2	2	2	C2	710809	
H&MS-28		MAJ E. S. OLIN		269	2	C2	T	2	1	1	2	C2	710723	
MASS-1		MAJ H. F. SAEGER		171		C3	P	3	1	1	2	C2	710930	
2D REDEYE PLAT		1STLT A. W. HEATH		35		C2	P	2	1	1	2	C2	710930	
MACS-5		MAJ J. R. THROGMORTON	BEAUFORT	222		C2	P	2	2	2	2			
MACS-6		MAJ A. M. YOUNGER	CHERPT	243		C3	T	2	2	2	3	C3	710801	
3D LAAM BN		LTCOL J. C. DIXON		555	9	C3	P	3	2	2	2	C3	710820	
MWCS-28		MAJ L. J. MITCHELL		188		C3	P	3	1	2	2	C4	710715	
MCCRTG-20		COL T. G. ELDER	CHERPT			C2	T	1	2	2	2	C3	710715	
H&MS-20		LTCOL R. C. BARRETT		602	2	C2	X	1	1	2	3	C1	710901	
VMFAT-201		LTCOL R. H. SCHULTZ		347	3	C3	X	3	1	2	4	C3	710815	4/F-4B, 25/F-4J
VMAT(AW)-202		LTCOL C. G. LAWSON		307	3	C4	R	2	2	4	3	C4	710715	14/A-6A, 3/TC-4C
VMT-203		LTCOL S. M. WILLIAMS		181	3	C3	T	2	1	1	3	C4	710715	19/TA-4F, 5/TA-4J

*PARENTHETIC UNIT INDICATES OPCON WHEN DIFFEFENT FROM ORGANIZATIONAL STRUCTURE.

TAB 21-7

[redacted]

Unclassified
UNCLASSIFIED

UNCLASSIFIED

MARINE CORPS COMMAND CENTER

STATUS OF FMF UNITS**

21 JULY 1971

UNIT*	NOTE	UNIT COMMANDER	LOCATION	STRENGTH USMC	STRENGTH USN	UNIT READINESS☆ CURRENT RATE	RSN	P	S	R	T	EXPECTED RATE	BY	MAJOR EQUIPMENT
MHTG-40		COL R. B. ENGESSLR	NEW RIVER			C1		1	1	1	1			
H&MS-40		MAJ J. P. KIZER		267	1	C1		1	1	1	1			
HMHT-401		LTCOL H. D. GRESS, JR.		124		C1		1	1	1	1			10/CH-53D
HMMT-402		LTCOL J. L. FELTER		163		C1		1	1	1	1			19/CH-46F
MAG-14		COL W. R. NOWAINICK	CHERPT			C3	X	3	2	2	4	C2	710801	
H&MS-14		LTCOL J. D. DUNN		646		C2	P	2	1	1	2	C2	711001	1/A-6A, 2/EA-6A, 6/F-4B, 4/TA-4F
MAB-14 (-)		MAJ C. M. DOYLE		309	9	C3	P	3	1	2	1	C3	711001	
SU 1, MABS-14 (-)		MAJ B. L. MEEK	BOGUE,NC	231		C1		1	1	1	1			
MATCU-61		CAPT G. P. HAYES		60		C2	P	2	1	1	2	C2	710715	
VMCJ-2 (-)		LTCOL J. L. GREEN	CHERPT	355	3	C2	R	1	1	2	2	C2	711001	14/EA-6A/ 9/RF-4B
DET 60, VMCJ-2 (6THFLT)	*16		USS SARATOGA	143	1	C1		1	1	1	1			4/EA-6A
VMA(AW)-121		MAJ E. A. BIRZER	CHERPT	193	1	C3	P	3	1	3	2	C2	710801	11/A-6A
VMA(AW)-224	31	LTCOL B. R. STANDLEY		281	3	C3	P	1	1	3	2	C2	710616	12/A-6A
VMA(AW)-332		LTCOL P. R. JONES, JR.		180	2	C2	P	2	1	1	2	C1	710831	11/A-6A
VMFA-312		MAJ R. G. KROPP		181		C4	P	4	2	3	4	C4	711001	7/F-4B
DET 14, 2D MAW (NAS, KEY WEST)	*		KEY WEST	84		C1		1	1	1	1			3/F-4B
MAG-26		COL G. R. HUNTER	NEW RIVER			C1		1	1	1	1	C1	7107020	
H&MS-26		MAJ C. E. CANNON		586		C2	X	2	1	1	1	C2	710721	31/CH-46F, 17/CH-53A, 11/CH-53D
MABS-26		MAJ Z. V. LAMASCUS		477	44	C4	P	4	1	1	1	C4	710901	
MATCU-64 (MAG-26)	*	CAPT D. W. ESMOND		42		C4	P	4	1	2	3	C3	710915	
VMO-1		LTCOL R. D. MYERS		188		C3	P	3	2	3	1	C3	710806	16/OV-10A
HMA-269		LTCOL L. W. SMITH		243		C4	T	4	1	1	4	C2	710901	26/AH-1J, 6/UH-1E, 10/UH-1N
HML-167		LTCOL H. S. LOWREY												
HMM-162 (32D MAU)	*5	LTCOL J. W. ALBER	32D MAU	237	3	C1		1	1	1	1			12/CH-46F, 4/CH-53D, 2/UH-1E
HMM-261		MAJ D. R. ALLEN, JR.	NEW RIVER	269		C2	R	1	1	2	1	C2	710901	23/CH-46F
HMM-263		LTCOL V. W. HAZELBAKER	QUANTICO			C4	N	5	5	5	5			20/CH-46D, 4/CH-46F
HMM-264		MAJ R. K. GOFORTH	NEW RIVER	264		C1		1	1	1	1			28/CH-46F
HMH-362		MAJ R. F. WILEY		185		C2	R	1	1	2	1	C2	710901	16/CH-53D
HMH-461		LTCOL D. E. WEBB		193		C1		1	1	1	1	C2	710801	1/CH-53A, 16/CH-53D
MAG-31		COL N. B. MCCRARY	BEAUFORT			C3	P	3	1	2	3	C2	710711	
H&MS-31		MAJ G. B. FERRINGTON		671		C3	R	2	1	3	2	C3	710815	1/C-117D, 2/F-4B, 4/F-4J, 3/TA-4F
MABS-31		MAJ J. L. CUNNINGHAM		328	18	C3	P	3	1	1	3	C3	710903	
MATCU-69		CAPT W. T. FARROW		39		C4	P	4	1	1	4	C4	710731	
VMFA-251		MAJ J. M. MEAD		274	1	C3	T	2	1	2	3	C2	710801	13/F-4B, 7/F-4J
VMFA-333 (CVA-66)	*3	LTCOL R. PLANT	USS AMERICA	303	1	C2	R	1	2	2	2			11/F-4J
VMFA-451		LTCOL R. J. WEISS	BEAUFORT	267	1	C3	T	3	1	3	3	C2	710930	18/F-4J
MAG-32		COL H. HUNTER, JR.	BEAUFORT			C2	X	2	2	3	3	C2	710813	
H&MS-32		MAJ R. L. UPCHURCH		519		C2	X	3	2	2	2	C2	710801	1/C-117D, 5/TA-4F
MABS-32		MAJ H. R. PALMATEER		386	17	C2	P	2	1	2	1	C2	710805	
MATCU-63		1STLT M. M. HENDERSON		36		C3	X	4	1	2	2	C3	710805	
VMA-324	30	LTCOL G. J. ERTLMEIER		179	1	C2	X	2	2	2	3	C2	710730	5/A-4E, 12/A-4M
VMA-331		LTCOL P. E. BROOKSHIRE		174	1	C4	R	2	1	4	2	C3	710722	20/A-4E
VMA-513		LTCOL C. M. BAKER		132	2	C4	T	4	3	2	4	C3	711101	6/AV-8A
2D FSR		COL E. C. DRESBACH, JR.	CAMLEJ	2103	27	C3	P	3	1	2	3	C4	711001	
H&SBN		LTCOL J. B. CANTIENY		609	19	C3	P	3	2	2	3	C2	710801	
SUPPLY BN		LTCOL D. J. BEARD		751	8	C4	P	4	1	1	4	C4	711001	
MAINT BN		LTCOL C. L. BOOTH		743		C3	P	3	1	1	3	C4	711001	1/LVTP-5, 3/LVTR, 1/M103 TK, 1/M48 TK, 4/M51 VTR, 1/M67 TK

* PARENTHETIC UNIT INDICATES OPCON WHEN DIFFERENT FROM ORGANIZATIONAL STRUCTURE.

TAB 21-8

[redacted]

Unclassified

UNCLASSIFIED

S[redacted] UNCLASSIFIED

MARINE CORPS COMMAND CENTER

STATUS OF FMF UNITS**

21 JULY 1971

UNIT	NOTE	UNIT COMMANDER	LOCATION	STRENGTH		UNIT READINESS☆								MAJOR EQUIPMENT
						CURRENT						EXPECTED		
				USMC	USN	RATE	RSN	P	S	R	T	RATE	BY	

UNIT READINESS RATING CATEGORY

C-1 FULLY COMBAT READY
C-2 SUBSTANTIALLY COMBAT READY
C-3 MARGINALLY COMBAT READY
C-4 NOT COMBAT READY

READINESS ABBREVIATIONS

P PERSONNEL READINESS
S SUPPLIES/EQUIPMENT ON HAND
R EQUIPMENT READINESS
T TRAINING READINESS
X COMMANDERS SUBJECTIVE JUDGEMENT
N RESOURCE ALLOCATION BY COGNIZANT SERVICE DOES NOT PERMIT A HIGHER C-RATING

NOTES

1. BLT 3/4 BREAKDOWN ON TAB 34.
2. 31ST MAU BREAKDOWN ON TAB 34.
3. ABOARD USS AMERICA (CVA-66).
4. ASSIGNED III MAF
5. LANFOR6THFLT 1-71 (32D MAU) BREAKDOWN ON TAB 36.
6. LANFORCARIB 1-71 BREAKDOWN ON TAB 36.
7. AT FUJI TRNG (3D RECON BN (-)(REIN), CO B, 3D TANK BN AND BTRY F/2/12).
8. H&SCO, CO B, 1ST SP BN IN CADRE STATUS.
9. GTMO BN (REIN) BREAKDOWN ON TAB 36-2.
10. TRUCK CO, 1ST SERV BN (CADRE).
11. CO C, 7TH ENGR BN (CADRE).
12. THIS UNIT IS BOTH ADCON/OPCON TO WERS-17 (-).
13. AIR ALERT BATTALION.
14. PERSONNEL AND EQUIPMENT CARRIED IN HQBN, 1ST MARDIV.
15. VIEQUES TRNG (DET, H&SCO, CO A, 1/2).
16. ABOARD USS SARATOGA (CVA-60).
17. INCLUDES STRENGTH CO D, 7TH ENGR BN AND 1ST PLAT, 1ST BRIDGE CO.
18. H&SCO, CO B, CO C, AND CO D, 1ST TANK BN (CADRE).
19. H&SCO, CO B, AND CO C, 3D AMTRAC BN (CADRE).
20. PERSONNEL AND EQUIPMENT CARRIED IN HQBN, 2D MARDIV.
21. ONE PLATOON IS DEPLOYED WITH LANFOR6THFLT 1-71 AND ALSO ONE PLATOON WTIH LANFORCARIB 1-71.
22. PERSONNEL AND EQUIPMENT CARRIED IN HQBN, 3D MARDIV.
23. DET 5TH COMM BN STRENGTH INCLUDED IN COMM SPT CO, 9TH COMM BN (-).
24. SANGLEY AUGMENTATION FORCE (DET, 4TH MARINES w/1 OFF AND 151 ENL) AT SANGLEY PT, R.P.I.
25. ONE PLATOON IS DEPLOYED WITH LANFOR6THFLT 1-71, ONE PLATOON WITH LANFORCARIB 1-71 AND ONE PLATOON WITH THE GTMO BN.
26. STRENGTH INCLUDES DET, H&SCO, DET, ENGR SPT CO, AND CO A, 1ST ENGR BN.
27. THIS UNIT IS BOTH ADCON/OPCON TO MAG-12, HOWEVER, IS PHYSICALLY LOCATED ON OKINAWA WITH THEIR STRENGTH CARRIED UNDER OKINAWA.
28. FOUR OFFICERS AND 15 ENLISTED ATTACHED TO VAL-4 FOR EVALUATION OF YOV-10D.
29. EQUIPMENT AND PERSONNEL REDEPLOYED FROM RVN ON 20JUN71 AND ARE SCHEDULED TO ARRIVE SANTA ANA ON 17JUL71.
30. DET, VMA-324 AT CHINA LAKE TRNG W/6 A-4E A/C (10-23JUL71).
31. DET, VMA(AW)-224 AT FALLON, NEVADA W/9 A-6A A/C (18-31JUL71).

** SOURCE: MARES FORSTAT REPORT DATED 7 JULY 1971.

UNCLASSIFIED

[redacted]

TAB 21-9

Unclassified

[redacted]

MARINE CORPS COMMAND CENTER

UNCLASSIFIED

RECAPITULATION OF FMF ACTUAL STRENGTHS*

FMF

21 JULY 1971

UNIT	GROUND		AIR		GRAND TOTAL	
	USMC	USN	USMC	USN	USMC	USN
FMF	63,235	2,224	36,746	601	99,981	2,825

PACIFIC

FMFPAC	38,833	1,397	22,285	384	61,118	1,781
MIDPAC	3,773	133	1,942	25	5,715	158
HQ, FMFPAC	980	36	67		1,047	36
1ST MARBDE	2,021	84	1,875	25	3,896	109
OTHER	772	13			772	13
WESTPAC (III MAF)	17,736	630	8,851	139	26,587	769
III MAF (OKINAWA)	17,736	630	3,021	32	20,757	662
HQ, III MAF	131				131	
3D MARDIV (-)(REIN)	14,525	580			14,525	580
1ST MAW			3,021	32	3,021	32
3D FSR	3,080	50			3,080	50
III MAF (JAPAN)			5,830	107	5,830	107
1ST MAW			5,830	107	5,830	107
(1) LANFOR 7TH FLT	2,837	129	370	3	3,207	132
31ST MAU	1,420	63	353	3	1,773	66
BLT 3/4	1,417	66	17		1,434	66
EASTPAC	17,324	634	11,492	220	28,816	854
HQ, I MAF	21				21	
1ST MARDIV (-)(REIN)	14,244	515			14,244	515
FORTRPS, FMFPAC	1,495	75			1,495	75
3D MAW			11,492	220	11,492	220
1ST FSR	1,564	44			1,564	44

ATLANTIC

FMFLANT	24,402	827	14,461	217	38,863	1,044
EAST COAST	24,402	827	14,471	217	38,863	1,044
HQ, FMFLANT	726	4	79		805	4
2D MARDIV	16,407	650			16,407	650
FORTRPS, FMFLANT	5,166	146			5,166	146
2D MAW			14,382	217	14,382	217
2D FSR	2,103	27			2,103	27
(2) CARIBBEAN	2,191	82			2,191	82
GTMO BN (REIN)	1,001	34			1,001	34
LANFORCARIB 1-71	1,190	48			1,190	48
(2) MEDITERRANEAN	1,472	69	684	5	2,156	74
LANFOR6THFLT 1-71 (32D MAU)	1,472	69	238	3	1,710	72
DET 60, VMCJ-1			143	1	143	1
VMFA-333			303	1	303	1

NOTES:
(1) STRENGTH INCLUDED IN III MAF OKINAWA.
(2) STRENGTH INCLUDED IN EAST COAST.

UNCLASSIFIED

Unclassified

*SOURCE: MARES FORSTAT REPORT DATED 7JUL71.

TAB 22

S[redacted]

[redacted] UNCLASSIFIED

MARINE CORPS COMMAND CENTER

DISTRIBUTION OF MAJOR GROUND EQUIPMENT AND AIRCRAFT

GROUND EQUIPMENT

21 JULY 1971

EQUIPMENT		NOTE	TOTAL EQUIP	JAPAN	OKI	7TH FLT MAU s	MID PAC	CAM PEN	29 PALMS			CAM LEJ	GTMO	6TH FLT MAU s	CARIB	OTHER
81MM MORTAR	M29		204		33	16	16	67				48	8	8	8	
106MM RR	M40A1C		204		33	16	16	67				48	8	8	8	
107MM	M30		6					6								
105MM HOW TD	M101A	4	162	6	42	12	18	30				42		6	6	
155MM HOW TD	M114A1		5					5								
155MM HOW SP	M109		35		17							18				
155MM GUN SP	M53		32						26			6				
175MM GUN SP			24						12			12				
8" HOW SP	M110		12		2				4			6				
90MM GUN TANK	M48	4	137	5	43	10		25				37	7	5	5	
120MM GUN TANK	M-103		33					15				13	5			
FLAME TANK	M-67		25		8			7				8	2			
VTR	M-51		28		6			5	4			13				
LVTR	M-51		14		3		1	3				7				
LVTP-5 COMD			32		8	2	3	8				9		1	1	
LVTP-5			354		77	20	44	70				123		10	10	
LVTE-1			16		7			5				4				

AIRCRAFT

AIRCRAFT	NOTE	TOTAL A/C	JAPAN	OKI	7TH FLT MAU s	MID PAC	EL TORO	SANTA ANA	YUMA	CH PT	BEAU	NEW RIVER	6TH FLT MAU s	CARIB	OTHER
FIXED WING															
C-117D		19	5			1	6			5	2				
KC-130F		30		9			10			11					
C-54P/Q/R/S		6	3				2			1					
TA-4F		67	10			2	8		16	23	8				
TA-4J		7							2	5					
TC-4C		3								3					
T-28B		5				5									
AV-8A		6									6				
A-6A		81	12				20			49					
EA-6A	1	28	6				2			16					4
RF-4B		28	9				10			9					
F-4B	3	115	14			8	36		22	17	15				3
F-4J	5	108	15			28				25	28				12
A-4E	7	92	41						26		25				6
A-4F		22					22								
A-4M		12									12				
OV-10A	2	62		14		6	4	12				16			10
US-2B		1				1									
HELICOPTERS															
UH-1E	2	62		14	4	8						6	2		22
UH-1N		10										10			
AH-1G		21		21											
AH-1J		30		4								26			
CH-46A		5				5									
CH-46D	6	128		44	13	30		21							20
CH-46F	6	159						42				101	12		4
CH-53A		66						48				18			
CH-53D		95		16	4	18						53	4		
VH-34D		1				1									
UV-34D		2				2									

NOTES:
1. DET, VMCJ-2 ABOARD USS SARATOGA (CVA-60) IN "OTHER" (4/EA-6A A/C ASSIGNED). AFLOAT MED.
2. AT CAMPEN IN "OTHER".
3. AT KEY WEST IN "OTHER".
4. AT FUJI TRNG AREA, 3D RECON BN (-) WITH CO B, 3D TANK BN (-) AND BTRY F/2/12.
5. ABOARD USS AMERICA (CVA-66)(VMFA-333)(12/F-4J) IN "OTHER".
6. AT QUANTICO "OTHER".
7. AT CHINA LAKE FOR TRNG (10-23JUL71).

Unclassified

UNCLASSIFIED [redacted]

TAB-23

UNCLASSIFIED

[redacted]

MARINE CORPS COMMAND CENTER

FLEET MARINE FORCE DISPOSITION

21 JULY 1971

(7) CHINA LAKE TRNG
DET, VMA-324
(6/A-4E A/C)
(10-23JUL71)

(6) 7TH MAB
HQ, 7TH MAB
7TH MARINES
PROV MAG-50
AT CAMPEN

(8) 8TH MAB
HQ, 8TH MAB
34TH MAU
PROV MAG-40
AT CAMLEJ

VMFA 333 ABOARD (3)
USS AMERICA (CVA-66)
OPS TYRRHENIAN SEA

LANFOR6THFLT 1-71 (2)
32D MAU
BLT 3/2
HMM-162
AT NAVPLION, GREECE

SANGLEY AUGMENTATION FORCE
DET, 4TH MARINES
AT SANGLEY POINT, R.P.I.

I MAF
1ST MARDIV (-) (REIN)
FORTRPS, FMFPAC
3D MAW

HQ, FMFPAC
1ST MARDIV
3D MAR (-) (REIN)
MAG-24

FALLON TRNG (7)
DET, VMA(AW)-224
(9/A-6A A/C)
(17-31JUL71)

HQ, FMFLANT
2D MARDIV (-) (REIN)
FORTRPS, FMFLANT
2D MAW

GTMO BN (REIN)
2D BN, 8TH MAR
BTRY B, 1/10
2 PLATS, 2D TANK BN
DET, FSR

LANFORCARIB 1-71
BLT 1/6
AT PANAMA, C.Z.

VIEQUES TRAINING
DET, H&SCO, 2/2
CO E, 2/2
AT CAMP GARCIA, P.R.

(4) DET 60, VMCJ-2 (4/EA-6A A/C)
ABOARD USS SARATOGA (CVA-60)
AT CORFU, GREECE

OKINAWA
III MAF
3D MARDIV (-) (REIN)
MAG-36

JAPAN
1ST MAW

FUJI TRAINING
3D RECON BN (-)(REIN)
CO B, 3D TK BN (-)
F BTRY/2/12

BLT 3/4
AT OKINAWA STANDING
DOWN UNTIL 16AUG71

LANFOR7THFLT
31ST MAU
BLT 2/9
HMM-164
AT HONG KONG

DISTRIBUTION BY BATTALION/SQUADRON

	INF BNS	VMFA	VMA	VMA(AW)	VMCJ	HMM	HMH	*HML	VMO	VMGR
WESTPAC	6	2	2	1	1	2	1	1	1	1
OKINAWA	(4)	(2)	(2)	(1)	(1)	(1)	(1)	(1)	(1)	(1)
JAPAN										
LANDING FORCE	(2)					(1)				
MIDPAC	2	3				1	1			
HAWAII	(2)	(3)				(1)	(1)			
EASTPAC	10	4	2	2	1	2	2	1	1	1
EL TORO/SANTA ANA		(4)	(2)	(2)	(1)	(2)	(2)			(1)
CAMPEN	(10)							(1)	(1)	
ATLANTIC	8	4	3	3	1	3	2	*2	1	1
CAMP LEJEUNE	(6)									
CHERRY POINT		(1)		(3)	(1)					(1)
BEAUFORT		(3)	(3)							
NEW RIVER						(2)	(2)	*(2)	(1)	
QUANTICO						(1)				
CARIB	(2)									
EUROPE	1					1				
MEDITERRANEAN	(1)					(1)				
GRAND TOTAL	27	13	7	6	3	9	6	4	3	3

*HMA-269, MAG-26 AT NEW RIVER, N. C.

UNCLASSIFIED

TAB 31-1

[redacted]

Unclassified

[redacted]

UNCLASSIFIED

MARINE CORPS COMMAND CENTER

21 JULY 1971

FLEET MARINE FORCE MOVEMENTS

	UNIT	ETD/ATD	FROM	DESTINATION	ETA/ATA
	MOVEMENTS 15 - 21 JULY 1971				
(1)	H&MS-16 (-)	20JUN71	DANANG, RVN	SANTA ANA, CALIFORNIA	17JUL71
(1)	MABS-16	20JUN71	DANANG, RVN	SANTA ANA, CALIFORNIA	17JUL71
(1)	CO A (REIN), 7TH ENGR BN	22JUN71	DANANG, RVN	29 PALMS, CALIFORNIA	18JUL71
(1)	CO A, 1ST MED BN	22JUN71	DANANG, RVN	CAMP PENDLETON, CALIFORNIA	18JUL71
(1)	DET, 5TH COMM BN	22JUN71	DANANG, RVN	CAMP PENDLETON, CALIFORNIA	18JUL71
(1)	5TH CIT	22JUN71	DANANG, RVN	CAMP LEJEUNE, NORTH CAROLINA	18JUL71
	FLC (-)	24JUN71	DANANG, RVN	CAMP PENDLETON, CALIFORNIA	19JUL71
	3D RECON BN (-) (REIN)	11JUL71	OKINAWA	FUJI, JAPAN	15JUL71
	CO B, 3D TK BN (-)	11JUL71	OKINAWA	FUJI, JAPAN	15JUL71
	BTRY F/2/12	11JUL71	OKINAWA	FUJI, JAPAN	15JUL71
(3)	VMFA-333	16JUL71	ROTA, SPAIN	OPS TYRRHENIAN SEA	17JUL71
		19JUL71	OPS TYRRHENIAN SEA	OPS WESTERN MEDITERRANEAN	22JUL71
(5)	LANFOR7THFLT (31ST MAU)	14JUL71	SUBIC BAY, R.P.I.	ARGOPS SOUTH CHINA SEA	15JUL71
		16JUL71	ARGOPS SOUTH CHINA SEA	HONG KONG	18JUL71
(7)	DET VMA-331	16JUL71	FALLON, NEVADA	BEAUFORT, SOUTH CAROLINA	17JUL71
(2)	LANFOR6THFLT 1-71 (32D MAU)	14JUL71	KUSADASI, TURKEY	NAVPLION, GREECE	15JUL71
		20JUL71	NAVPLION, GREECE	NAPLES, ITALY	22JUL71
(1)	11TH CIT	16JUL71	FMFPAC	1ST MARBDE	16JUL71
(9)	LANFORCARIB 1-71 (BLT 1/6)	15JUL71	GUANTANAMO BAY, CUBA	PANAMA, CANAL ZONE	17JUL71
(7)	DET VMA(AW)-224	17JUL71	CHERRY POINT, NORTH CAROLINA	FALLON, NEVADA	17JUL71
	CO E/2/2	19JUL71	CAMP LEJEUNE, NORTH CAROLINA	CAMP GARCIA, PUERTO RICO	20JUL71
	CO A/1/2	20JUL71	CAMP GARCIA, PUERTO RICO	CAMP LEJEUNE, NORTH CAROLINA	21JUL71
(10)	BLT 2/6 (-)	21JUL71	LITTLE CREEK, VIRGINIA	MOREHEAD CITY, NORTH CAROLINA	22JUL71
	PROJECTED MOVEMENTS 22 - 28 JULY 1971				
(3)	VMFA-333	23JUL71	OPS WESTERN MEDITERRANEAN	NAPLES, ITALY	24JUL71
(4)	DET 60, VMCJ-2	22JUL71	CORFU, GREECE	OPS IONIAN SEA	22JUL71
(5)	LANFOR7THFLT (31ST MAU)	26JUL71	HONG KONG	ARGOPS SOUTH CHINA SEA	26JUL71
		28JUL71	ARGOPS SOUTH CHINA SEA	MINDORO ISLAND, R.P.I.	28JUL71
(7)	DET VMA-324	23JUL71	CHINA LAKE, CALIFORNIA	BEAUFORT, SOUTH CAROLINA	23JUL71

NOTES:

(1) PASSAGE OF COMMAND:

UNIT	FROM	TO	DATE
MABS-16 (-)	3D MAB	3D MAW	3JUN71
H&MS-16	3D MAB	3D MAW	20JUN71
CO A (REIN), 7TH ENGR BN	3D MAB	FORTRPS, FMFPAC	10JUN71
5TH CIT	3D MAB	FMFLANT	22JUN71
CO A, 1ST MED BN	3D MAB	1ST MARDIV	22JUN71
DET, 5TH COMM BN	3D MAB	1ST MARDIV	22JUN71
11TH CIT	FMFPAC	1ST MARBDE	16JUL71

(2) RETURNED TO NAVPLION, GREECE FOR REMAINDER OF TRAINING ANCHORAGE (15-20JUL71). ENROUTE (21-22JUL71) NAPLES, ITALY FOR UPKEEP (23JUL-6AUG71).

(3) CONDUCTING OPERATIONS IN THE TYRRHENIAN SEA (17-19JUL71) AND WILL PARTICIPATE IN POOPDECK 2-71 FROM 20-21JUL71. ENROUTE (22-23JUL71) NAPLES, ITALY, FOR UPKEEP (24JUL-2AUG71). POOPDECK 2-71 CONSISTS OF ONE CARRIER TASK GROUP CONDUCTING AIR STRIKES AGAINST SIMULATED TARGETS IN SPAIN WHILE DEFENDING AGAINST AIR ATTACKS BY ELEMENTS OF THE SPANISH AIR FORCE. THE PURPOSE WILL BE TO TEST WAR PLANS AND EXERCISE SIXTHFLT IN ALL FACETS OF CONVENTIONAL OR NUCLEAR STRIKE WARFARE.

(4) PORT VISIT AT CORFU, GREECE FROM 13-21JUL71 AND IS SCHEDULED FOR OPERATIONS IN THE IONIAN SEA/ EASTERN MEDITERRANEAN AREAS (22-28JUL71).

(5) ARGOPS IN THE SOUTH CHINA SEA (15-17JUL71), ENROUTE HONG KONG (18JUL71) FOR A PORT VISIT (19-25JUL71). ARGOPS SOUTH CHINA SEA (26-27JUL71) PRIOR TO CONDUCTING A PHIBLEX ON MINDORO ISLAND, R.P.I. (28-31JUL71). THE PHIBLEX IS SCHEDULED TO PROVIDE THE PARTICIPANTS (USN SHIPPING/EMBARKED USMC PERSONNEL) THE OPPORTUNITY TO TRAIN TOGETHER AND WORK TOGETHER AS A TEAM.

(6) CG, I MAF ACTIVATED THE 7TH MAB (HQ, 7TH MAB, 7TH MARINES AND PROV MAG-50) FOR PLANNING ON 1JUL71 FOR PARTICIPATION IN ROPEVAL 3-71. A MAB SIZE AMPHIBIOUS EXERCISE TO BE CONDUCTED IN THE CAMP PENDLETON/CLEVELAND NATIONAL FOREST AREAS DURING THE PERIOD 8-17SEP71. LANDING FORCE OPERATIONS WILL BE DESIGNED TO TRAIN FORCES IN THE PLANNING AND EXECUTION OF AMPHIBIOUS OPERATIONS INVOLVING THE TECHNIQUES OF STAND-OFF AMPHIBIOUS ASSAULT AND ASPECTS OF THE SEA-BASING CONCEPT. BGEN P. G. GRAHAM, CG, FORTRPS, FMFPAC, IS DESIGNATED AS CG, 7TH MAB.

(7) DET VMA-331 CONDUCTED TRAINING AT FALLON, NEVADA DURING THE PERIOD 11-16JUL71 AND RETURNED TO BEAUFORT, S. C. ON 17JUL71. DET VMA-324 AT CHINA LAKE, CALIFORNIA FOR TRAINING DURING THE PERIOD 10-23JUL71. ETR BEAUFORT, S. C. IS 23JUL71. VMA(AW)-224 DEPARTED CHERRY POINT, N. C. AND ARRIVED FALLON, NEVADA ON 17JUL71 FOR TRAINING DURING THE PERIOD 18-31JUL71.

(8) CG, FMFLANT ACTIVATED THE 8TH MAB (HQ, 8TH MAB, 34TH MAU AND PROV MAG-40) FOR PLANNING AND PARTICIPATION IN EXERCISE DEEP FURROW-71. EXERCISE DEEP FURROW-71 IS A JOINT AND COMBINED NATO EXERCISE TO BE CONDUCTED DURING THE PERIOD 9-20OCT71 TO INCLUDE AMPHIBIOUS LANDINGS IN TURKISH THRACE BY A COMBINED U.S. AND UNITED KINGDOM/ITALIAN LANDING FORCE. BGEN T. H. MILLER, JR., AWC 2D MAW, IS DESIGNATED AS CG, 8TH MAB.

(9) LANFORCARIB 1-71 (BLT 1/6) IS CONDUCTING A JUNGLE EXERCISE IN PANAMA, CANAL ZONE DURING THE PERIOD 17-28JUL71.

(10) CONDUCTED LANTNARMID-71 DURING THE PERIOD 23JUN-21JUL71. LANTNARMID-71 IS AN ANNUAL EXERCISE CONDUCTED TO ASSIST IN THE TRAINING OF MIDSHIPMAN IN AMPHIBIOUS OPERATIONS.

UNCLASSIFIED

Unclassified

[redacted]

TAB 31-2

WED'SDAY

7

MAR. 1973

MARCH 1973						
S	M	T	W	T	F	S
				1	2	3
4	5	6	7	8	9	10
11	12	13	14	15	16	17
18	19	20	21	22	23	24
25	26	27	28	29	30	31

Unclassified

3/7/73

066 WED., MAR. 7, 1973 299

THURSDAY

FEB. 1973						
S	M	T	W	T	F	S
				1	2	3
4	5	6	7	8	9	10
11	12	13	14	15	16	17
18	19	20	21	22	23	24
25	26	27	28			

8

MAR. 1973

APR. 1973						
S	M	T	W	T	F	S
1	2	3	4	5	6	7
8	9	10	11	12	13	14
15	16	17	18	19	20	21
22	23	24	25	26	27	28
29	30					

Unclassified

3/8/73

067 THUR., MAR. 8, 1973 298

UNCLASSIFIED

MARINE CORPS COMMAND CENTER

FMF PACIFIC UNIT LOCATIONS AND STRENGTHS*
(MIDPAC/EASTPAC)

21 JULY 1971

MIDPAC

FMFPAC

HQ, FMFPAC

1st MAR BDE

HQ, 1ST MAR BDE (KANEOHE)

3D MARINES (-)(REIN)
- 1/3
- 2/3

MAG-24
- VMFA-212 (F-4J)
- VMFA-235 (F-4J)
- VMFA-122 (F-4B)
- HMM-262 (CH-46D)
- HMH-463 (CH-53D)
- DET, VMO-6 (-) (OV-10A)
- DET, HML-367(-) (UH-1E)

MIDPAC STRENGTH RECAPITULATION	USMC	USN
HQ, FMFPAC	1,047	36
HQ, 1ST MAR BDE	280	14
3D MAR(-)(REIN)	1,386	70
SERVICE/SUPPORT UNITS	355	
MAG-24	1,875	25
OTHER	772	13
GRAND TOTAL MIDPAC	5,715	158

EASTPAC

I MAF

HQ, I MAF (CAMP PENDLETON)

1ST MAR DIV (-) (REIN)

1ST MARINES
- 1/1
- 2/1
- 3/1

5TH MARINES 3/3 (CADRE)
- 1/5
- 2/5
- 3/5

7TH MARINES
- 1/7
- 2/7
- 3/7

FORTRPS FMFPAC

HQ, FORTRPS FMFPAC (29 PALMS)

3D MAW

HQ, 3D MAW (EL TORO)

MAG-13 (EL TORO)
- VMA-223 (A-4F)
- VMA-214 (A-4F)
- VMA(AW)-242 (A-6A)
- VMCJ-3 (RF-4B/EA-6A)
- VMFA-314
- VMFA-323 (F-4B)
- VMFA-334
- VMFA-531 (F-4B)
- VMA(AW)-225

MWSG-37 (EL TORO)
- VMGR-352 (KC-130F)

MHTG-30 (SANTA ANA)
- HMMT-301 (CH-53A)
- HMMT-302 (CH-46F)

MAG-56 (SANTA ANA)
- HMM-161 (CH-46D)
- HMM-163 (CH-46F)
- HMH-361 (CH-53A)
- HMH-363 (CH-53A)

MAG-56 ELEMENTS (CAMPEN)
- VMO-2
- HML-267 (OV-10A/UH-1E)

MCCRTG-10 (YUMA)
- VMFAT-101 (F-4B)
- VMAT-102 (A-4E)
- VMT-103 (TA-4F/J)

MAG-16 (ENROUTE CONUS)

1ST FSR

	USMC	USN
HQ, I MAF	21	
1ST MAR DIV (-) (REIN)	14,244	515
HQ, FORTRPS FMFPAC	1,495	75
3D MAW	11,492	220
1ST FSR	1,564	44
GRAND TOTAL EASTPAC	28,816	854

SOURCE: MARES FORSTAT REPORT DATED 7JUL71.

Unclassified

UNCLASSIFIED

TAB 32

UNCLASSIFIED [redacted]

MARINE CORPS COMMAND CENTER

FMF PACIFIC UNIT LOCATIONS AND STRENGTHS AND OSD CEILING CONSIDERATIONS (WESTPAC)

21 JULY 1971

RVN

		USMC	USN
	OSD PROGRAM XIII SPACE AUTHORIZATION	637	
	SUB UNIT 1, 1ST ANGLICO	197	10
	MACV STAFF/MACV FIELD	173	
	NAVADVGRU/MACV UNITS	21	
	OTHERS	116	
(4)	TOTAL RVN STRENGTH AS OF 15JUL71	507	10

OKINAWA

III MAF (TF-79)

HQ, III MAF

3D MARDIV (-) (REIN) (TF-79.2)

HQ, 3D MARDIV (-)(REIN)
- 4TH MARINES
  - 1/4
  - 2/4
  - 3/4 (BLT)
- 9TH MARINES
  - 1/9
  - 2/9 (31ST MAU)
  - 3/9

1ST MAW

MAG-36

VMGR-152	(KC-130F)
VMO-6 (-)	(OV-10A/UH-1E)
HMH-462	(CH-53D)
HMM-164	(CH-46D/CH-53D/UH-1E)(31ST MAU)
HMM-165	(CH-46D)
HML-367	(UH-1E/AH-1G/J)

3D FSR

		USMC	USN
	OSD PROGRAM XIII SPACE AUTHORIZATION	19,249	934
	OKINAWA STRENGTH RECAPITULATION		
	III MAF		
	HQ, III MAF	131	
(3)	3D MARDIV (-)(REIN)	12,519	580
	1ST MAW ELEMENTS	3,021	32
	3D FSR	3,080	50
(1)	III MAF TOTAL	18,751	662
	OTHERS		
	MCB CAMP BUTLER/NON FMF	1,307	25
	NON-DEPLOYABLE CASUALS	0	
	SVN ORIGINATED PATIENTS	2	
	OTHER TOTAL	1,309	25
	GRAND TOTAL OKINAWA STRENGTH AS OF 8JUL71.	20,060	687

JAPAN

1ST MAW (TF-79.3)

HQ, 1ST MAW

MAG-12

VMA-211	(A-4E)
VMA-311	(A-4E)
VMA(AW)-533	(A-6A)

MAG-15

VMFA-115	(F-4B)
VMFA-232	(F-4J)
VMCJ-1	(EA-6A/RF-4B)

		USMC	USN
	OSD PROGRAM XIII SPACE AUTHORIZATION	7,000	
	JAPAN STRENGTH RECAPITULATION		
	HQ, 1ST MAW	853	54
	1ST MAW	5,201	53
(2)	NON-FMF	1,062	
	GRAND TOTAL JAPAN STRENGTH AS OF 8JUL71.	7,116	107

NOTES
(1) LESS ONE MAU.
(2) INCLUDES MCAS, IWAKUNI, MB YOKOSUKA, MB SASEBO, AND CO "E", MAR SPT BN.
(3) SANGLEY AUGMENTATION FORCE (DET, 4TH MARINES) CONSISTING OF 1 OFF AND 151 ENL INCLUDED IN 3D MARDIV (-) (REIN) STRENGTH.
(4) HQMC MANPOWER FIGURES INDICATE THAT USMC PERSONNEL STRENGTH IN RVN IS 585 AS OF 10JUL71. THE DIFFERENCE IN PERSONNEL STRENGTH IS CURRENTLY BEING RESOLVED BETWEEN COMUSMACV AND HQMC.

SOURCES: RVN STRENGTH: COMUSMACV WEEKLY STRENGTH REPORT MSG 170732ZJUL71.

OKI/JAPAN STRENGTH: FMFPAC WESTPAC STRENGTH VERIFICATION MSG 152346ZJUL71.

UNCLASSIFIED

Unclassified

[redacted]

TAB 33

UNCL[redacted]

MARINE CORPS COMMAND CENTER

CHRONOLOGY OF SIGNIFICANT EVENTS

21 JULY 1971

DATES	LOCATION	UNITS	REMARKS
15JUN71	FUTEMA, OKINAWA	MACS-8, MACG-18, 1ST MAW	MACS-8 DEACTIVATED 150530ZJUN71.
26JUN71	DANANG, RVN	FLC	FLC DEACTIVATED 260900ZJUN71.
27JUN71	DANANG, RVN	3D MAB	AT 270400ZJUN71 HQ 3D MAB WAS DEACTIVATED AND MAJGEN A. J. ARMSTRONG, CG 3D MAB, DEPARTED DANANG ENROUTE TO HQ FMFPAC, HAWAII. WITH THE DEACTIVATION OF HQ 3D MAB, ALL 13593 OSD SPACES SCHEDULED FOR REDEPLOYMENT/DEACTIVATION DURING INCREMENT VII (KEYSTONE ORIOLE (ALPHA)) HAVE EITHER REDEPLOYED FROM RVN OR HAVE BEEN DEACTIVATED, LEAVING A TRANSITIONAL SUPPORT FORCE OF 637 PROGRAM XIII OSD SPACES.
30JUN71	ATSUGI, JAPAN SANGLEY PT., R.P.I.	MB, ATSUGI MB, SANGLEY PT.	MB, ATSUGI, JAPAN, DEACTIVATED 30 JUNE 1971. MB, SANGLEY PT., R.P.I. DEACTIVATED 30 JUNE 1971
30JUN71	29 PALMS, CALIF.	CO A (REIN) & DET, HQCO, 11TH ENGR BN, FORTRPS FMFPAC	CO A (REIN) AND DET, HQCO, 11TH ENGR BN DEACTIVATED 301600ZJUN71.
30JUN71	BEAUFORT, S.C.	MACS-9, MACG-28, 2DMAW	MACS-9 DEACTIVATED 30JUN71.
1JUL71	IWAKUNI, JAPAN CHERRY PT,N.C. EL TORO, CALIF GLENVIEW, ILL.	1ST MAW 2D MAW 3D MAW 4TH MAW	DEACTIVATIONS MWHG-1 AND MWFS-1, 1ST MAW MWHG-2 AND MWFS-2, 2D MAW MWHG-3 AND MWFS-3, 3D MAW MWHG-4 (GLENVIEW, ILLINOIS) AND MWFS-4 (GREEN BAY, WISC), 4TH MAW (USMCR) REDESIGNATIONS FROM — TO 1ST MAW H&HS-1 — MWHS-1 MWCS-1 — MWCS-18 2D MAW H&HS-2 — MWHS-2 MWCS-2 — MWCS-28 3D MAW H&HS-3 — MWHS-3 MWCS-3 — MWCS-38 4TH MAW (USMCR) H&HS-4 (DETROIT, MICH.) — MWHS-4 MWCS-4 (CHICAGO, ILL.) — MWCS-48
9JUL71	CAMPEN, CALIF	3D 8" HOW BTRY, 1ST MARDIV	3D 8" HOW BTRY DEACTIVATED 091500ZJUL71.
19JUL71	RVN	3D MAB	AT 191630ZJUL71, WITH THE ARRIVAL OF THE FINAL 3D MAB ELEMENTS OF INCREMENT VII (KEYSTONE ORIOLE (ALPHA)) ABOARD THE USS ST. LOUIS (LKA-116) AT LONG BEACH, CALIFORNIA, REDEPLOYMENT OF ALL MAJOR USMC UNITS FROM RVN HAS BEEN COMPLETED.

Unclassified

UNCLASSIFIED [redacted]

TAB 41-5

[redacted]

UNCLASSIFIED

MARINE CORPS COMMAND CENTER

21 JULY 1971

USMC/ENEMY CASUALTIES IN SEASIA

USMC BATTLE CASUALTIES

KIA/DOW	WIA (EVAC)	WIA (RTD)	MIA/PW
12,922	51,356	37,161	81/23

USMC CASUALTY FIGURES ARE PROVIDED DAILY BY HQMC CASUALTY SECTION (CODE DNA) AND REFLECT ALL CASUALTIES REPORTED AS OF 20JUL71.

USMC NON-BATTLE CASUALTIES

DEAD	INJURED	MISSING
1,678	1,935	12

FIGURES INDICATED AS INJURED ARE ONLY THOSE IN SERIOUS/CRITICAL INJURY OR DISEASE CATEGORY AND DO NOT INCLUDE THOSE OF A MINOR NATURE

USMC INFLICTED ENEMY CASUALTIES

KIA	PW	WPNS
86,535	4,098	22,879

TYPICAL DISPOSITION OF 100 USMC WIA

100
- 42 Treated in field & returned to duty
- 58 Admitted to hospital

→ 58
- 9 Treated & returned to duty in SVN
- 49 Evacuated from SVN

→ 49
- 28 Treated in WestPac & returned to duty
- 21 Evacuated to CONUS hospital

→ 21
- 6 Treated & returned to full duty
- 7 Physical disability separation
- 2 Dies of wounds
- 6 Other (long term treatment, etc.)

UNCLASSIFIED

[redacted]

TAB 45-1

Unclassified

UNCLASSIFIED

Department of Defense

NUMBER OF CASUALTIES INCURRED BY U. S. MILITARY PERSONNEL
IN CONNECTION WITH THE CONFLICT IN VIET-NAM

Cumulative from January 1, 1961 through July 10, 1971

21 JULY 1971

	Army	Navy *	Marine Corps	Air Force	Total
A. CASUALTIES RESULTING FROM ACTIONS BY HOSTILE FORCES					
1. Killed	25,069	1,050	11,465	455	38,039
2. Wounded or Injured					
a. Died of wounds	3,482	140	1,449	44	5,115
b. Nonfatal wounds					
Hospital care required	95,703	4,081	51,356	799	151,939
Hospital care not required	103,657	5,827	37,161	2,287	148,932
3. Missing					
a. Died while missing	1,622	182	5	392	2,201
b. Returned to control	62	7	6	26	101
c. Current missing	268	113	81	558	1,020
4. Captured or Interned					
a. Died while captured or interned	14	-	3	1	18
b. Returned to control	37	3	5	6	51
c. Current captured or interned	62	144	23	236	465
5. Deaths					
a. From aircraft accidents/incidents					
Fixed Wing	88	155	139	692	1,074
Helicopter	2,194	62	429	59	2,744
b. From ground action	27,905	1,155	12,354	141	41,555
TOTAL DEATHS a/	30,187	1,372	12,922	892	45,373
B. CASUALTIES NOT THE RESULT OF ACTIONS BY HOSTILE FORCES					
6. Current Missing	133	-	12	-	145
7. Deaths					
a. From aircraft accidents/incidents					
Fixed Wing	246	172	45	277	740
Helicopter	1,696	52	242	18	2,008
b. From other causes	4,650	604	1,391	260	6,905
TOTAL DEATHS	6,592	828	1,678	555	9,653

a/ Sum of lines 1, 2a, 3a and 4a.

*Navy figures include a small number of Coast Guard casualties.

Department of Defense
OASD (Comptroller)
Directorate for Information Operations
July 14, 1971

TAB 45-2

UNCLASSIFIED

Unclassified

[redacted]

UNCLASSIFIED

MARINE CORPS COMMAND CENTER

STRENGTHS*

RVN ARMED FORCES (RVNAF)

	21 JULY 1971
ARMY (ARVN)	412,705
NAVY (VNN)	41,184
AIR FORCE (VNAF)	50,245
MARINE CORPS (VNMC)	13,806
REGIONAL FORCES (RF)	295,019
POPULAR FORCES (PF)	247,638
TOTAL RVNAF	1,060,597

UNITED STATES FORCES

ARMY	185,387
NAVY	10,653
AIR FORCE	36,607
MARINE CORPS	507*
COAST GUARD	101
TOTAL U.S.	233,255

FREE WORLD MILITARY ASSISTANCE FORCES (FWMAF)

REPUBLIC OF KOREA	48,205
AUSTRALIA	6,301
PHILIPPINES	82
THAILAND	11,228
NEW ZEALAND	277
REPUBLIC OF CHINA	31
SPAIN	7
TOTAL FWMAF	66,131

TOTAL FORCES IN RVN 1,359,983

★ SOURCE: RVNAF - MACV MONTHLY RPT OF GVN STRENGTH AS OF 31MAY71.

ALL OTHERS - MACV WEEKLY STRENGTH RPT AS OF 2400, 15JUL71.

*HQMC MANPOWER FIGURES INDICATE THAT USMC PERSONNEL STRENGTH IN RVN IS 585 AS OF 10JUL71. THE DIFFERENCE IN PERSONNEL STRENGTH IS CURRENTLY BEING RESOLVED BETWEEN COMUSMACV AND HQMC.

Unclassified

TAB 46-2

[redacted]

UNCLASSIFIED

UNCLASSIFIED

MARINE CORPS COMMAND CENTER

REPUBLIC OF KOREA MARINE CORPS

21 JULY 1971

Commandant: General LEE, BYUNG MOON

Senior Marine Advisor: Colonel Howard T. PITTMAN, USMC

Strength: 32,360 (JUN71)

The Headquarters of the Republic of Korea Marine Corps (ROKMC) is located in Seoul. Marine Barracks are located in Seoul and the major Naval Bases at Inchon, Mokpo, Chejudo, Chinhae, Pusan, and Mukho. The ROKMC Supply and Maintenance Depot as well as the ROK Marine Schools Base are located at Chinhae. The Schools Base offers Recruit Training, NCO School, Supply School, LVT School, Officer Candidate Course, Drill Instructor School, Senior Amphibious Warfare School, English Language Training, and the ROKMC Command and Staff College. The ROK Marine Corps Amphibious Base at Pohang houses the 1st ROKMC Division (-), Special Training Unit to support ROK Marine personnel assigned to the 2d ROKMC Brigade (Blue Dragons) in Vietnam. The ROKMC is operationally organized as indicated below:

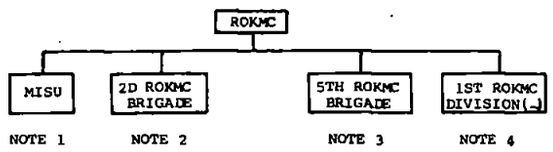

NOTE 1: Marine Island Security Unit (MISU) is a defense force approximating a reinforced Infantry Battalion in size and weaponry. It is located on the offshore islands of the Westerly extension of the DMZ mandated to the United Nations. Although it is administratively controlled by HQ, ROKMC, it is under the operational control of Commander, ROK Fleet. The organization of the MISU is indicated on Chart 1.

NOTE 2: The 2d ROK Marine Brigade is deployed to the Republic of Vietnam and organization is indicated on Chart 2.

NOTE 3: The 5th ROK Marine Brigade is currently deployed in a defensive role along the DMZ on the Kimpo Peninsula. It is administratively controlled by HQ, ROKMC but is under the operational control of I Corps (Group), Eighth U. S. Army. It is considered the Brigade would be fixed in position in the event of open hostilities in Korea and could not be readily redeployed without major adjustment in combat unit locations within the the United Nation Command during peacetime. The Brigade was initially formed from the assets of the list ROKMC Division and represents those units which the division is minus at this time. The current organization of the 5th Brigade is indicated on Chart 3.

NOTE 4: The 1st ROKMC Division (-) located at Pohang is administratively controlled by HQ, ROKMC and under the operational control of Commander, Naval Forces Korea. It is designated as the strategic Reserve for the Defense of the ROK. The organization for the Division (-) is indicated on Chart 4. It should be noted that the Amphibian Tractor Battalion is presently equipped with the LVT-3C.

MARINE ISLAND SECURITY UNIT (MISU)

COMMANDING OFFICER:
BGEN HUR HONG

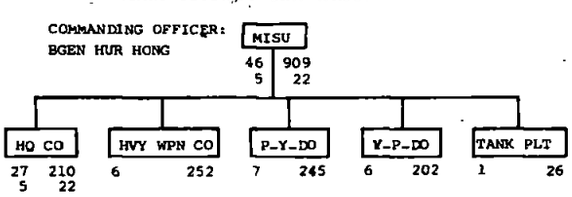

CHART #1

5TH ROK MARINE BRIGADE

COMMANDING GENERAL:
BGEN KIM, Suk Ku

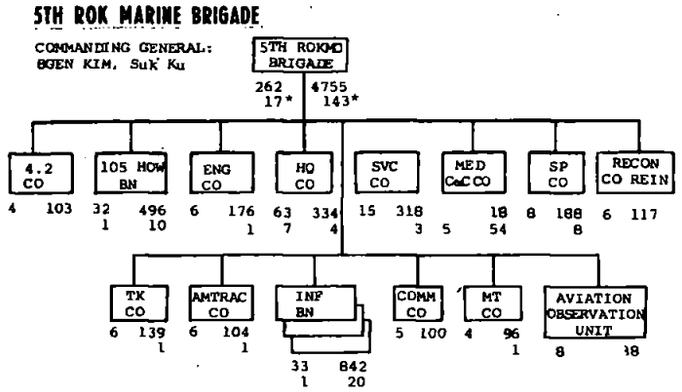

CHART #3

2D ROK MARINE BRIGADE

Strength: 6,150 (JUL71)

COMMANDING GENERAL:
MGEN LEE, Dong Yong

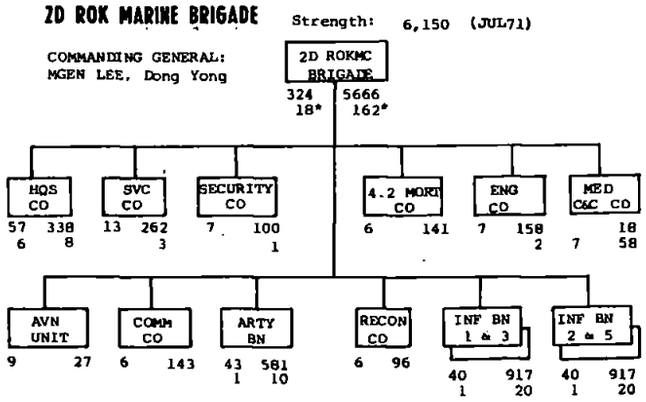

CHART #2

FIRST ROK MARINE DIVISION (-)

COMMANDING GENERAL:
MGEN KIM, YUN SANG

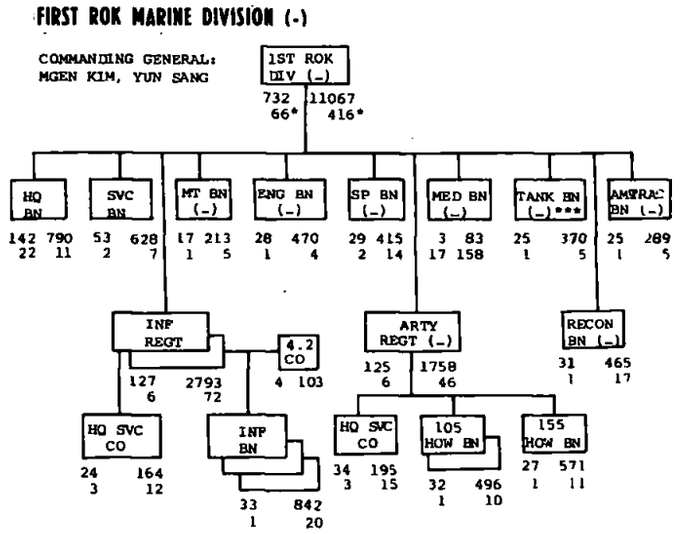

CHART #4

* Second line of figures under each block indicates ROK Navy personnel.
** Minus includes 1 Co Tanks assigned 5th Brigade and 1 Platoon Tanks attached MISU.

Unclassified

TAB 48-1

UNCLASSIFIED

C[redacted]

UNCLASSIFIED

MARINE CORPS COMMAND CENTER

CHRONOLOGY OF FMF DEPLOYMENT AND STRENGTH IN RVN

21 JULY 1971

MAY 1971 (CONT'D)

EMBARK UNIT #2	SPACES	ATD	DESTINATION	ATA
3D BN, 1ST MAR	1157	13MAY71	CAMPEN	30MAY71
HQCO, 1ST MAR	220	13MAY71	CAMPEN	30MAY71
DET, HQBN, 1ST MARDIV	60	13MAY71	CAMPEN	30MAY71
1ST IT	6	13MAY71	CAMPEN	30MAY71
DET, HQ BTRY, 11TH MAR	57	13MAY71	CAMPEN	30MAY71
1ST BN(-), 11TH MAR	399	13MAY71	CAMPEN	30MAY71
DET, 1ST RADIO BN	85	13MAY71	HAWAII	24MAY71
HMM-262(-)	247	13MAY71	HAWAII	24MAY71
HMM-263(-)	248	13MAY71	QUANTICO	30MAY71
CO A, 1ST RECON BN	131	13MAY71	CAMPEN	30MAY71
DET, 7TH ENGR BN		13MAY71	CAMPEN	30MAY71
TOTAL	2610			
EMBARK UNIT #3				
DET, HMM-262		19MAY71	HAWAII	2JUN71
DET, HMH-463		19MAY71	HAWAII	2JUN71
DET, FLC		19MAY71	HAWAII	2JUN71
DET, HQ BTRY, 11TH MAR		19MAY71	HAWAII	2JUN71
EMBARK UNIT #4				
VMA-311	216	22MAY71	IWAKUNI	26MAY71
3D ITT	11	22MAY71	OKINAWA	25MAY71
3D CIT	16	22MAY71	OKINAWA	25MAY71
TOTAL	243			
EMBARK UNIT #5				
DET, FLC		23MAY71	HAWAII/CAMPEN	10/18JUN71
EMBARK UNIT #6				
3D 8" HOW BTRY	222	24MAY71	29 PALMS	19JUN71
DET, FLC		24MAY71	CAMPEN	19JUN71
TOTAL	222			
EMBARK UNIT #7				
DET, HMH-463		26MAY71	HAWAII	10JUN71
DET, VMO-6	53	26MAY71	HAWAII	10JUN71
DET, HML-167		26MAY71	NEW RIVER	16JUN71
DET, FLC		26MAY71	CAMPEN	16JUN71
TOTAL	53			

3D MAB	OTHERS	TOTAL STRENGTH AS OF 27MAY71	
5,516	250	USMC	5,766
176		USN	176
		TOTAL	5,942

JUNE 1971

EMBARK UNIT #8	SPACES	ATD	DESTINATION	ATA
2D BN, 1ST MAR	1157	1JUN71	CAMPEN	26JUN71
BTRY B, 1ST BN, 11TH MAR	130	1JUN71	CAMPEN	26JUN71
MASS-3	207	1JUN71	EL TORO	26JUN71
DET, FLC	1000	1JUN71	CAMPEN	26JUN71
TOTAL	2494			
EMBARK UNIT #9				
H&MS-11	401	6/10JUN71	EL TORO	2JUL71
MABS-11	390	6/10JUN71	EL TORO	2JUL71
HMH-463(-)	236	10JUN71	HAWAII	24JUN71
HML-167(-)	229	10JUN71	NEW RIVER	2JUL71
DET, H&MS-16		10JUN71	SANTA ANA	2JUL71
DET, MABS-16		10JUN71	SANTA ANA	2JUL71
DET, FLC		10JUN71	CAMPEN	2JUL71
HQCO, 3D MAB		10JUN71	HAWAII	24JUN71
TOTAL	1256			
EMBARK #10				
HML-367	228	16JUN71	OKINAWA	19JUN71
MATCU-68	68	16JUN71	OKINAWA	19JUN71
HQ, 3D MAB	369	24JUN71	HAWAII	13JUL71
TOTAL	665			

TAB 410-11

Unclassified

UNCLASSIFIED

UNCLASSIFIED

[redacted]

MARINE CORPS COMMAND CENTER

CHRONOLOGY OF FMF DEPLOYMENT AND STRENGTH IN RVN

21 JULY 1971

JUNE 1971 (CONT'D)

EMBARK UNIT #11	SPACES	ATD	DESTINATION	ATA
DET, COMM SPT CO, 7TH COMM BN		20JUN71	HAWAII	13JUL71
DET, H&MS-16		20JUN71	SANTA ANA	16JUL71
DET, MABS-16		20JUN71	SANTA ANA	16JUL71
EMBARK UNIT #12				
CO A, 1ST ENGR BN	234	22JUN71	CAMPEN	9JUL71
CO A, 1ST MT BN	82	22JUN71	CAMPEN	9JUL71
CO C, 1ST SP BN	76	22JUN71	CAMPEN	9JUL71
H&MS-16(-)	458	20JUN71	SANTA ANA	16JUL71
MABS-16(-)	571	20JUN71	SANTA ANA	16JUL71
TOTAL	1421			
EMBARK UNIT #13				
CO A (REIN), 7TH ENGR BN	284	22JUN71	29 PALMS	15JUL71
COMM SPT CO(-), 7TH COMM BN	201	24JUN71	HAWAII	13JUL71
CO A, 1ST MED BN	30	22JUN71	CAMPEN	15JUL71
DET, FLC		22/23JUN71	HAWAII/CAMPEN	9JUL71
DET, 5TH COMM BN	34	22JUN71	CAMPEN	15JUL71
5TH CIT	16	22JUN71	CAMLEJ	15JUL71
TOTAL	565			
EMBARK UNIT #14				
1ST MP BN	585	23JUN71	CAMPEN	9JUL71
FLC(-)	1217	24JUN71	CAMPEN	19JUL71
TOTAL	1802			
MISCELLANEOUS				
*CAPS	476	1MAY71	RVN	
*CACO HQ	48	1MAY71	RVN	
*CAG HQ	76	1MAY71	RVN	
DET, 11TH DENTAL CO	2	7JUN71	IWAKUNI	
DET, VMGR-152	64	17JUN71	OKINAWA	
TOTAL	666			

*2D CAG DEACTIVATED IN RVN 171500ZMAY71

NON-FMF SPACES DELETED IN RVN		
TDY	1	8JUN71
STRAADFLD TEAM	1	8JUN71
MAWNAESU LN	2	8JUN71
NAVY/MC JUD ACT	1	15JUN71
TOTAL	5	

INCREMENT VII TOTAL SPACES

OF THE TOTAL 13,593, THREE (3) SPACES WERE CREDITED TO THE MARINE CORPS DEBIT/CREDIT ACCOUNT, THEREFORE, MARINE CORPS AUTHORIZED STRENGTH IN RVN IS REDUCED BY A TOTAL OF 13,590 SPACES, LEAVING 637 SPACES ON 1 JULY 1971.

USMC	TOTAL STRENGTH AS OF 24JUN71	
921	USMC	921
19	USN	19
	TOTAL	940

UNCLASSIFIED

TAB 410-12

[redacted]

Unclassified

[redacted] UNCLASSIFIED

MARINE CORPS COMMAND CENTER

INCREMENT VII

REDEPLOYMENT OF USMC UNITS FROM RVN

21 JULY 1971 (FINAL)

UNIT	NOTE	STRENGTH		EQUIPMENT	STANDDOWN/EDD OR ATD (AS DTG) 3	DESTINATION	ETA OR ATA (AS DTG) 3	SHIPPING
		PROGRAM XII	SEA LIFT					
EMBARK UNIT I			229			CONUS		USS TULARE LKA-112) USS FREDERICK(LST 1184)
1ST BN, 1ST MAR		1157	155		031530ZMAY71	CAMPEN	191600ZMAY71	TULARE
HQ BTRY & BTRY A, 1STBN, 11THMAR	1	130	25		021000ZMAY71	CAMPEN	211800ZMAY71	FREDERICK
VMA(AW)-225	10	304	48		031530ZMAY71	EL TORO	191600ZMAY71	TULARE
DET, FLC	1		1		031530ZMAY71 021000ZMAY71	CAMPEN	191600ZMAY71 211800ZMAY71	TULARE FREDERICK
EMBARK UNIT II			343			HAWAII/ CONUS		USS OGDEN (LPD-5)
3D BN, 1ST MAR		1157	163		130230ZMAY71	CAMPEN	301500ZMAY71	OGDEN
HQCO, 1ST MAR		220	34		130230ZMAY71	CAMPEN	301500ZMAY71	OGDEN
DET, HQBN, 1ST MARDIV		60	5		130230ZMAY71	CAMPEN	301500ZMAY71	OGDEN
1ST IT	2	6	1		130230ZMAY71	CAMPEN	301500ZMAY71	OGDEN
DET, HQ BTRY, 11TH MAR		57	8		130230ZMAY71	CAMPEN	301500ZMAY71	OGDEN
1ST BN (-), 11TH MAR		399	83		130230ZMAY71	CAMPEN	301500ZMAY71	OGDEN
DET, 1ST RADIO BN		85	12		130230ZMAY71	HAWAII	241900ZMAY71	OGDEN
HMM-262 (-)		247	5		130230ZMAY71	HAWAII	241900ZMAY71	OGDEN
HMM-263 (-)	11	248	5		130230ZMAY71	QUANTICO	301500ZMAY71	OGDEN
CO A, 1ST RECON BN		131	24		130230ZMAY71	CAMPEN	301500ZMAY71	OGDEN
DET, 7TH ENGR BN			3		130230ZMAY71	CAMPEN	301500ZMAY71	OGDEN
EMBARK UNIT III			28			HAWAII/ CONUS		USS IWO JIMA (LPH-2)
DET, HMM-262	1/13		22	37/CH-46D	191731ZMAY71	HAWAII	020650ZJUN71	IWO JIMA
DET, HMH-463	1/13		4	3/CH-53D 4/UH-1E	191731ZMAY71	QUANTICO	071745ZJUN71	IWO JIMA
DET, FLC	1		1	2/C-117D	191731ZMAY71	CAMPEN/ HAWAII	071745ZJUN71	IWO JIMA
DET, HQ BTRY, 11TH MAR			1		191731ZMAY71	CAMPEN	071745ZJUN71	IWO JIMA
EMBARK UNIT IV			65			JAPAN/OKI		USS DUBUQUE (LPD-8)
VMA-311		216	61		220315ZMAY71	IWAKUNI	262130ZMAY71	DUBUQUE
3D ITT		11	2	2/CH-53D	220315ZMAY71	OKINAWA	250600ZMAY71	DUBUQUE
3D CIT		16	2		220315ZMAY71	OKINAWA	250600ZMAY71	DUBUQUE
EMBARK UNIT V			50			HAWAII/ CONUS		USS SUMTER (LST-1181)
DET, FLC	1		50		231200ZMAY71	HAWAII/ CAMPEN	101800ZJUN71 181600ZJUN71	SUMTER
EMBARK UNIT VI			48			CONUS		USS SCHENECTADY (LST-1185)
3D 8" HOW BTRY	2	222	33		240900ZMAY71	29 PALMS	192100ZJUN71	SCHENECTADY
DET, FLC	1		15		240900ZMAY71	CAMPEN	192100ZJUN71	SCHENECTADY
EMBARK UNIT VII			47			HAWAII/ CONUS		USS OKINAWA (LPH-3)
DET, HMH-463	1		38	13/CH-53D	261330ZMAY71	HAWAII	101800ZJUN71	OKINAWA
DET, VMO-6		53		1/OV-10A	261330ZMAY71	HAWAII	101800ZJUN71	OKINAWA
DET, HML-167	1		7	8/UH-1E	261330ZMAY71	NEW RIVER	161700ZJUN71	OKINAWA
DET, FLC	1,6		2	1/A-4	261330ZMAY71	CAMPEN	161700ZJUN71	OKINAWA
EMBARK UNIT VIII			217			CONUS		USS DENVER (LPD-9)
2D BN, 1ST MAR		1157	174		011400ZJUN71	CAMPEN	260001ZJUN71	DENVER
BTRY B, 1ST BN, 11TH MAR	1	130	20		011400ZJUN71	CAMPEN	260001ZJUN71	DENVER
MASS-3	8	207	21		011400ZJUN71	EL TORO	260001ZJUN71	DENVER
DET, FLC	1,6	1000	2		011400ZJUN71	CAMPEN	260001ZJUN71	DENVER
EMBARK UNIT IX			116			HAWAII/ CONUS		USS TUSCALOOSA (LST-1187) USS DURHAM (LKA-114)
H&MS-11	1	401	32		101100ZJUN71 060800ZJUN71	EL TORO	021400ZJUL71 021500ZJUL71	DURHAM TUSCALOOSA
MABS-11	1	390	48		101100ZJUN71 060800ZJUN71	EL TORO	021400ZJUL71 021500ZJUL71	DURHAM TUSCALOOSA
HMH-463 (-)		236	3		101100ZJUN71	HAWAII	241700ZJUN71	DURHAM
HML-167 (-)		229	17		101100ZJUN71	NEW RIVER	021400ZJUL71	DURHAM
DET, H&MS-16					101100ZJUN71	SANTA ANA	021400ZJUL71	DURHAM
DET, MABS-16			15		101100ZJUN71	SANTA ANA	021400ZJUL71	DURHAM
DET, FLC					101100ZJUN71	CAMPEN	021400ZJUL71	DURHAM
HQCO, 3D MAB			1		101100ZJUN71	HAWAII	[illegible]	[illegible]

Unclassified

TAB 411-1

[redacted] UNCLASSIFIED

UNCLASSIFIED

MARINE CORPS COMMAND CENTER
INCREMENT VII

REDEPLOYMENT OF USMC UNITS FROM RVN

21 JULY 1971 (FINAL)

UNIT	NOTE	STRENGTH PROGRAM XII	STRENGTH SEA LIFT	EQUIPMENT	STANDDOWN/EOD OR ATD (AS DTG) 3	DESTINATION	ETA OR ATA (AS DTG) 3	SHIPPING
EMBARK UNIT X			37			OKI/ HAWAII		USS ST. LOUIS (LKA-116) USS DUBUQUE (LPD-8)
HML-367	12/15	228	29	7/UH-1E	160244ZJUN71	OKINAWA	190408ZJUN71	DUBUQUE
MATCU-68		68	6		160244ZJUN71	OKINAWA	190408ZJUN71	DUBUQUE
HQ, 3D MAB	6	369	2		241900ZJUN71	HAWAII	131800ZJUL71	ST. LOUIS
EMBARK UNIT XI			83			HAWAII/ CONUS		USS MANITOWOC (LST-1180) USS ST. LOUIS (LKA-116)
DET, COMM SPT CO, 7TH COMM BN	1				201145ZJUN71	HAWAII	131800ZJUL71	ST. LOUIS
DET, H&MS-16	1		2		201145ZJUN71	SANTA ANA	161200ZJUL71	MANITOWOC
DET, MABS-16	1		81		201145ZJUN71	SANTA ANA	161200ZJUL71	MANITOWOC
EMBARK UNIT XII			58			CONUS		USS MANITOWOC (LST-1180) USS PEORIA (LST-1183)
CO A, 1ST ENGR BN		234	35		220700ZJUN71	CAMPEN	091500ZJUL71	PEORIA
CO A, 1ST MT BN		82	12		220700ZJUN71	CAMPEN	091500ZJUL71	PEORIA
CO C, 1ST SP BN		76	11		220700ZJUN71	CAMPEN	091500ZJUL71	PEORIA
H&MS-16 (-)	15	458			201145ZJUN71	SANTA ANA	161200ZJUL71	MANITOWOC
MABS-16 (-)		571			201145ZJUN71	SANTA ANA	161200ZJUL71	MANITOWOC
EMBARK UNIT XIII			85			HAWAII/ CONUS		USS DEFIANCE (LSD-31) USS ST. LOUIS (LKA-116) USS FREDERICK (LST-1184)
CO A(REIN), 7TH ENGR BN		284	40		221040ZJUN71	29 PALMS	151530ZJUL71	PT. DEFIANCE
COMM SPT CO (-), 7TH COMM BN		201	34		241900ZJUN71	HAWAII	131800ZJUL71	ST. LOUIS
CO A, 1ST MED BN		30	4		221040ZJUN71	CAMPEN	151530ZJUL71	PT. DEFIANCE
DET, FLC	1,6				221040ZJUN71 231130ZJUN71	HAWAII/ CAMPEN	092045ZJUL71 091500ZJUL71	PT. DEFIANCE FREDERICK
DET, 5TH COMM BN	2	34	5		221040ZJUN71	CAMPEN	151530ZJUL71	PT. DEFIANCE
5TH CIT		16	2		221040ZJUN71	CAMLEJ	151530ZJUL71	PT. DEFIANCE
EMBARK UNIT XIV			131			CONUS		USS FREDERICK(LST-1184) USS ST.LOUIS (LKA-116)
1ST MP BN	2	585	100		231130ZJUN71	CAMPEN	091500ZJUL71	FREDERICK
FLC (-)	6	1217	31		241900ZJUN71	CAMPEN	191630ZJUL71	ST. LOUIS
MISC								
CAPS	9	476			1MAY/			
CACO HQ	9	48			1MAY/			
CAG HQ	9	76			1MAY/			
DET, 11TH DENTAL CO	7	2			7JUN/	IWAKUNI		
DET, VMGR-152	7	64			17JUN/	OKINAWA		
NON-FMF SPACES TO BE DELETED IN RVN								
TDY	5	1			8JUN			
STRAAD FLD TEAM	5	1			8JUN			
MAW NAESU LN	5	2			8JUN			
NAVY/MC JUD ACT	5	1			15JUN			
TOTAL	14	13,593						

USMC ELEMENTS IN RVN AFTER 1 JUL 71

THE FOLLOWING IS A LIST OF USMC OSD PROGRAM XII SPACES REMAINING IN RVN AFTER 1 JULY 1971.

NAVFORV	5
HQ STAFF MACV	49
JUSPAO	4
SAE	2
I CORPS	3
NAV ADV GRU	80
SOG	17
AID DEPT STATE	3
DEP COM AGCY	11
SUB UNIT 1, 1ST ANGLICO	180
EMBASSY SECURITY	156
CORDS	5
NOG DET YOV-10	21
DCPG LNO	3
DET, H&HS-18	20
DOD SPEC REP	3
ROK LOG TEAM	13
CREDIT ACCOUNT	60
MEDTC	1
WESTPAC TRANS OFF	1
TOTAL	637

NOTES:

1. PROGRAM XII SPACE REDUCTIONS FOR THIS DETACHMENT REFLECTED WITH PARENT UNIT DEPLOYING IN ANOTHER EMBARKATION UNIT.
2. UNIT TO BE DEACTIVATED AT DESTINATION.
3. THE DTGs IN THIS COLUMN INDICATE ACTUAL TIME OF DEPARTURE/ARRIVAL AND ARE IN ZULU TIME.
4. UNASSIGNED
5. THIS UNIT HAS NO EMBARKATION REQUIREMENT. SPACES WILL BE ADMINISTRATIVELY DROPPED ON DATE SHOWN.
6. SPACES TO BE DEACTIVATED IN RVN.
7. UNIT DEPLOYED BY ORGANIC AIR 27 JUNE 1971.
8. UNIT TRANSFERRED 68 PROGRAM XII SPACES TO DET, MASS-2 AT IWAKUNI, JAPAN UPON DEBARKATION.
9. 2D CAG DEACTIVATED IN RVN 171500ZMAY71.
10. UNDER THE CODE NAME TRANSPAC KEY UNCLE, VMA(AW)-225 FERRIED 12/A-6A TO EL TORO AND 2 F-4B TO MIRAMAR. TRANSPAC KEY UNCLE COMPLETED 11MAY71.
11. EIGHT PERSONNEL AND 10/CH-46D HELICOPTERS, ALONG WITH OTHER MISCELLANEOUS HEAVY EQUIPMENT FROM HMM-263, REDEPLOYED TO OKINAWA ABOARD THE USS DUBUQUE, DEPARTED DANANG AT 050730ZMAY71. ARR OKINAWA 080600ZMAY71.
12. FOUR PERSONNEL AND ONE AH-1J AIRCRAFT, ALONG WITH OTHER MISCELLANEOUS HEAVY EQUIPMENT FROM HML-367, REDEPLOYED TO TO OKINAWA ABOARD THE USS DUBUQUE, DEPARTED DANANG AT 050730ZMAY71. ARR OKINAWA 080600ZMAY71.
13. IWO JIMA OFF LOAD AT HAWAII 30/CH-46D, AND AT SAN DIEGO 7/CH-46D, 3/CH-53D AND 4/UH-1E.
14. OF THE TOTAL OF 13,593, THREE SPACES WERE CREDITED TO THE MARINE CORPS DEBIT/CREDIT ACCOUNT. THEREFORE, MARINE CORPS AUTHORIZED STRENGTH IN RVN IS REDUCED BY A TOTAL OF 13,590 SPACES, LEAVING 637 SPACES ON 1 JULY 1971.
15. USS DUBUQUE WITH PERSONNEL FROM H&MS-16 (10 USMC), HML-367 (1 USMC), AND FLC (19 USMC) WITH 22/AH-1G HELICOPTERS, ALONG WITH OTHER MISCELLANEOUS HEAVY EQUIPMENT FROM FLC, REDEPLOYED TO SUBIC. DEPARTED DANANG AT 311730ZMAY71. ARRIVED SUBIC 021234ZJUN71.

TAB 411-2

Unclassified

UNCLASSIFIED

UNCLASSIFIED

MARINE CORPS COMMAND CENTER

TABLE OF CONTENTS

28 JULY 1971

SECTION I - MARINE CORPS FORCES - WORLD WIDE	LIST OF EFFECTIVE TABS	DATE OF LASTEST CHANGE
ALLOCATION OF MARINE CORPS PERSONNEL	11	28JUL71●
SELECTED PERSONNEL AND AIRCRAFT DATA	12	28JUL71●
UNITED STATES MARINE CORPS RESERVE	13-1	30DEC70
	13-2	23DEC70
	13-3	7JUL71
	13-4	23DEC70
MISCELLANEOUS NON-FMF UNITS	14-1	14JUL71
(MARINE BARRACKS)	14-2	30JUN71
(MARINE SECURITY GUARD BATTALION)	14-3	14APR71
(MARINE DETACHMENTS AFLOAT)	14-4	14APR71
	14-5	30JUN71
SECTION II - STATUS OF FLEET MARINE FORCES		
STATUS OF FMF UNITS	21-1	28JUL71●
	21-2	21JUL71
	21-3	28JUL71●
	21-4	21JUL71
	21-5	28JUL71●
	21-6	21JUL71
	21-7	28JUL71●
	21-8	28JUL71●
	21-9	28JUL71●
RECAPITULATION OF FMF ACTUAL STRENGTHS	22	28JUL71●
DISTRIBUTION OF MAJOR GROUND EQUIPMENT AND AIRCRAFT	23	28JUL71●
SECTION III - DISPOSITION OF FLEET MARINE FORCE UNITS		
FLEET MARINE FORCE DISPOSITION, DISTRIBUTION BY BATTALION/ SQUADRON AND MOVEMENTS	31-1	28JUL71●
	31-2	28JUL71●
FMF PACIFIC UNIT LOCATIONS AND STRENGTHS (MIDPAC/EASTPAC)	32	28JUL71●
FMF PACIFIC UNIT LOCATIONS, STRENGTHS AND OSD CEILING CONSIDERATIONS (WESTPAC)	33	28JUL71●
LANDING FORCES - 7TH FLEET	34	14JUL71
FMF ATLANTIC UNIT LOCATIONS AND STRENGTHS	35	14JUL71
LANDING FORCES - MEDITERRANEAN AND CARIBBEAN	36-1	14JUL71
GUANTANAMO BAY BATTALION	36-2	14JUL71
SECTION IV - GENERAL		
CHRONOLOGY OF SIGNIFICANT EVENTS	41-1	17MAR71
	41-2	21APR71
	41-3	23JUN71
	41-4	16JUN71
	41-5	28JUL71
STATISTICAL SUMMARY OF III MAF OFFENSIVE OPERATIONS IN VIETNAM	42-1	21APR71
	42-2	18NOV70
	42-3	18NOV70
	42-4	10MAR71
	42-5	12MAY71
	42-6	12MAY71
LANDING FORCES - 7TH FLEET; SUMMARY OF OPERATIONS IN RVN	43-1	18NOV70
	43-2	18NOV70
	43-3	18NOV70
U.S. MARINE CORPS AIRCRAFT LOSSES IN SEASIA	44-1	18NOV70
	44-2	18NOV70
	44-3	18NOV70
	44-4	18NOV70
	44-5	18NOV70
	44-6	18NOV70
	44-7	18NOV70
	44-8	18NOV70
	44-9	25NOV70
	44-10	5MAY71
	44-11	5MAY71
USMC/ENEMY CASUALTIES IN RVN; CUMULATIVE DOD CASUALTY FIGURES ON U.S. MILITARY PERSONNEL AND COMPARATIVE USMC/ENEMY KIA IN CONNECTION WITH THE CONFLICT IN RVN	45-1	28JUL71●
	45-2	28JUL71●
	45-3	26MAY71
	45-4	30JUN71
DISPOSITION AND STRENGTH OF MAJOR U.S. AND FW FORCES IN RVN	46-1	28JUL71●
	46-2	28JUL71●
COMUSMACV STAFF, PRINCIPAL MARINE OFFICERS HQ MACV	47	7JUL71
REPUBLIC OF KOREA MARINE CORPS	48-1	21JUL71
REPUBLIC OF VIETNAM MARINE CORPS	48-2	7JUL71
VIETNAM GEOGRAPHIC AND CLIMATE DATA	49-1	18NOV70
	49-2	18NOV70
CHRONOLOGY OF FMF DEPLOYMENT AND STRENGTH IN RVN	410-1	20JAN71
	410-2	25NOV70
	410-3	25NOV70
	410-4	25NOV70
	410-5	25NOV70
	410-6	25NOV70
	410-7	9DEC70
	410-8	10MAR71
	410-9	19MAY71
	410-10	23JUN71
	410-11	21JUL71
	410-12	21JUL71

Unclassified

CONTENTS OF THIS PUBLICATION
DOWNGRADED AT 3 YEAR
INTERVALS
DECLASSIFIED AFTER 12 YEARS
DOD DIR 5200.10

UNCLASSIFIED

MARINE CORPS
JUL 28 1971
REFERENCE BRANCH

Unclassified

UNCLASSIFIED

MARINE CORPS COMMAND CENTER

28 JULY 1971

ALLOCATION OF MARINE CORPS PERSONNEL

AS OF 31 MAY 1971

	TOTAL		GROUND		AVIATION		GRAND TOTAL	PERCENT
	OFF	# ENL	OFF	# ENL	** OFF	#** ENL		
OPERATING FORCE								
FLEET MARINE FORCE TOTAL	9,781	95,045	4,899	61,679	4,882	33,366	104,826	48.40
SECURITY FORCES								
NAVY DEPARTMENT	500	8,790	500	8,790			9,290	4.29
STATE DEPARTMENT	16	937	16	937			953	.44
FT MEADE, MARYLAND	16	359	16	359			375	.17
SPECIAL ACTIVITIES	55	688	55	688			743	.34
SECURITY FORCE TOTAL	587	10,774	587	10,774			11,361	5.25
MARINES AFLOAT	199	1,808	175	1,758	24	50	2,007	.93
OPERATING FORCE TOTAL	10,567	107,627	5,661	74,211	4,906	33,416	118,194	54.57
TRAINING BASE								
RECRUITS		12,604		12,604			12,604	5.82
STUDENTS								
INDIVIDUAL CBT TRAINEES	1	4,373	1	4,373			4,374	2.02
STAGING BATTALION	2	1,983	2	1,975		8	1,985	.92
BST/AVN TRAINEES	389	3,364	2	1,781	387	1,583	3,753	1.73
OTHER	2,433	7,288	1,428	4,007	1,005	3,281	9,721	4.49
STUDENTS TOTAL	2,825	17,008	1,433	12,136	1,392	4,872	19,833	9.16
OVERHEAD								
RECRUIT TRAINING	437	4,007	437	4,006		1	4,444	2.05
STUDENT TRAINING	1,901	11,498	1,437	9,819	464	1,679	13,399	6.19
OVERHEAD TOTAL	2,338	15,505	1,874	13,825	464	1,680	17,843	8.24
RESERVE TRAINING PROGRAM	694	4,798	489	2,160	205	2,638	5,492	2.54
TRAINING BASE TOTAL	5,857	49,915	3,796	40,725	2,061	9,190	55,772	25.75
SUPPORTING BASE								
SUPPLY ESTABLISHMENT	367	2,371	367	2,371			2,738	1.26
BASE SERVICE AND ADMIN.	2,871	15,766	2,079	10,818	792	4,948	18,637	8.60
JOINT AND LIAISON	629	360	483	250	146	110	989	.46
SUPPORTING BASE TOTAL	3,867	18,497	2,929	13,439	938	5,058	22,364	10.33
TRANSIENTS, PATIENTS & PRISONERS								
NON-MOVING TRANSIENTS	147	2,605	104	2,314	43	291	2,752	1.27
TRANSIENTS	1,389	14,206	1,011	11,202	378	3,004	15,595	7.20
PATIENTS	36	621	25	550	11	71	657	.30
HOSPITALIZED CASUALTIES	32	631	28	587	4	44	663	.31
PRISONERS	3	267	2	233	1	34	270	.12
CAPTURED OR MISSING	68	60	12	53	56	7	128	.06
TRANS, PATIENTS & PRISONERS TOTAL	1,675	18,390	1,182	14,939	493	3,451	20,065	9.26
UNKNOWNS	133	138	*133	121		17	271	.09
MARINE CORPS TOTAL	22,099	194,567	13,701	143,435	8,398	51,132	*216,666	100.00%

\# EXCLUDES 6 MONTH A/D TRAINEES

** INCLUDES AVN PERS. PERFORMING DUTY WITH GROUND FUNCTIONS

	OFF	ENL
FMF	1,036	69
RCTG	162	173
TOTAL	1,198	242

* INCLUDES 66 RESERVE OFFICERS ON TEMPORARY ACTIVE DUTY.

UNCLASSIFIED

TAB 11

UNCLASSIFIED

Unclassified

[redacted]

UNCLASSIFIED

MARINE CORPS COMMAND CENTER

SELECTED PERSONNEL AND AIRCRAFT DATA

PERSONNEL

28 JULY 1971

		STRENGTH	PERCENT USMC	PERCENT FMF	PERCENT FMFPAC
USMC TOTAL	*	212,339	100.00		
FLEET MARINE FORCES		99,373	46.71	100.00	
FMF ATLANTIC	#	38,863	18.30	39.11	
FMF PACIFIC	#	60,510	28.41	60.89	
VIETNAM		529 ¢	00.25		

SOURCE: * HQMC 1018-20 (ESTIMATED PERSONNEL DATA) AS OF 29JUN71.
MARES FORSTAT REPORT DATED 7JUL71.
¢ MACV WEEKLY STRENGTH REPORT AS OF 22JUL71.

AIRCRAFT

21 JULY 1971

		FIXW	HELO	TOTAL	PERCENT USMC	PERCENT FMF	PERCENT FMFPAC
USMC TOTALS	**	975	616	1,591	100.00		
FLEET MARINE FORCES	@	692	579	1,271	79.89	100.00	
FMF ATLANTIC	@	311	278	589	37.02	46.34	
FMF PACIFIC	@	381	301	682	42.87	53.66	

SOURCE: ** DC/S AIR STATUS BOARD PHOTO AS OF 26MAR71.
@ MARES FORSTAT REPORT DATED 7JUL71.

UNCLASSIFIED

Unclassified

[redacted]

TAB 12

UNCLASSIFIED

MARINE CORPS COMMAND CENTER

STATUS OF FMF UNITS **

28 JULY 1971

UNIT *	NOTE	UNIT COMMANDER	LOCATION	STRENGTH USMC	STRENGTH USN	UNIT READINESS ☆ CURRENT RATE	RSN	P	S	R	T	EXPECTED RATE	BY	MAJOR EQUIPMENT
FMF				99344	2825									
MIDPAC				5682	758									
FMFPAC		LTGEN W. K. JONES	HAWAII	6048	1781	C1		1	1	1	1			
HQ FMFPAC				1043	36									
H&SBN		COL R. G. LAUFFER	CP SMITH	980	27	C1		1	1	1	1			
DET 2, 21ST DENTAL CO (-)		CAPT M. R. HAMILTON(USN)			9	C1		1	1	1	1			
HQ SQDN		LTCOL C. E. DORFFELD	KANEOHE	63		C4	P	4	1	1	1	C4	710731	5/T-28B, 2/UH-34D, 1/US-2B 1/VH-34D
1ST ANGLICO (-)		MAJ J. B. LEONARD	SDIEGO	153	3	C4	S	2	4	2	1	C3	710601	
SU 1, 1ST ANGLICO (MACV)	*	LTCOL E. E. SHOULTS	SAIGON	168	10	C1		1	1	1	1			
1ST RADIO BN		LTCOL E. D. RESNIK	KANEOHE	422		C1		1	1	1	1			
1ST MARINE BRIGADE		BGEN V. A. ARMSTRONG	KANEOHE	3896	109	C4	P	4	3	3	3	C3	711031	
H&S CO		CAPT H. J. TRAUTWEIN, JR		251	14	C1		1	1	1	1			
1ST ITT		CAPT T. E. NADOLSKI		14		C1		1	1	1	1		-	
11TH CIT (CADRE) (FMFPAC)	*	CAPT K. W. CLEM				C4	N	5	5	5	5			
DET 1, 21ST DENTAL CO (-)		CDR J. D. CRAWFORD(USN)		15		C1		1	1	1	1			
3D MARINES (-) (REIN)		LTCOL K. L. CHRISTENSEN	KANEOHE			C4	P	4	4	4	4	C3	711030	
HQCO (-)		CAPT C. S. CERTAIN		182	19	C4	P	4	4	4	4	C3	710930	
1ST BN		MAJ P. J. KIESELBACH		963	51	C4	P	4	1	1	4	C4	710801	6/105 HOW TD, 8/106MM RR, 8/81 MORT
2D BN		MAJ F. W. BEEKMAN		118		C4	P	4	3	3	4	C3	711231	8/106MM RR, 8/81 MORT
CO A, 3D ENGR BN (-)		CAPT R. I. EDWARDS		107		C3	P	3	3	3	2	C2	711201	
CO A (REIN), 3D MT BN (-)		CAPT R. E. MANUEL		16		C4	P	4	2	2	4	C3	711215	
CO A (REIN), 3D SP BN (-) (CADRE)						C4	P	4	2	3	4	C3	711130	
CO A, 3D RECON BN (-) (REIN) (CADRE)						C4	P	4	4	4	4	C3	711031	
CO A (REIN), 3D MED BN (-) (CADRE)														
1ST BN (-), 12TH MAR		MAJ L. E. KOLEBER	KANEOHE			C4	P	4	2	3	4	C3	711031	12/105 HOW TD
CO D, 3D AMTRAC BN (-)		CAPT K. R. BURNS		144		C4	P	4	1	1	4	C3	710930	3/LVTP-5 COMD, 44/LVTP-5, 1/LVTR
COMM SPT CO, 7TH COMM BN(-)		MAJ R. T. HIMMERICH												
PROV SERV BN		MAJ R. E. LANGTON		211		C4	P	4	4	4	4	C3	710930	
MAG-24		COL R. E. CAREY	KANEOHE	1875	25	C3	X	4	2	3	4	C3	710915	
H&MS-24		LTCOL C. L. PHILLIPS		448		C3	S	2	3	3	2	C2	710901	1/C-117D, 5/CH-46A, 2/TA-4F
MABS-24		LTCOL W. R. LEDBETTER		343	25	C4	P	4	2	2	2	C3	710915	
MATCU-70		WO O. F. GOUR, JR.		38		C4	P	4	2	1	4	C3	710801	
VMFA-122		LTCOL L. FURSTENBERG		166		C4	P	4	1	4	4	C3	710901	8/F-4B
VMFA-212		LTCOL R. D. REVIE		209		C3	X	4	1	3	3	C2	710704	12/F-4J
VMFA-235		LTCOL F.L. FARRELL, JR.		227		C3	X	4	1	1	4	C2	710630	16/F-4J
MACS-2		LTCOL P. L. ELLIOTT		174		C4	R	4	3	4	3	C3	710801	
HMM-262		LTCOL F. K. WEST, JR.		159		C4	P	4	1	4	4	C3	710930	30/CH-46D
HMH-463		MAJ M. E. EDWARDS		111		C4	P	4	4	4	4	C4	710825	18/CH-53D
DET, VMO-6 (-)														6/OV-10A
DET, HML-367 (-)														8/UH-1E
WESTPAC				26587	769									
FMFPAC														
III MAF		LTGEN D. J. ROBERTSON	CP COURTNEY	26587	769									
H&S CO				131		C1		1	1	1	1			
3D MARDIV(-)(REIN) (III MAF)	*	MAJGEN L. METZGER	CP COURTNEY	14525	580	C2	T	1	1	1	2	C1	710705	
HQBN		COL H.A.F.VONDERHEYDE, JR.		1552	41	C2	X	1	1	2	2	C2	720601	
3D ITT	22	CAPT M. R. LAMB												
11TH ITT	22	CAPT C. K. ABLES												
15TH ITT	22	CAPT E. R. KRAMER	CP HANSEN											
17TH ITT	22	CAPT G. H. JOHNSON, JR.												
SCAMP	22													
3D CIT		CAPT R. E. SHROYER		14		C1		1	1	1	1			
1ST SSCT		CAPT T. L. STROHBECKER		8		C3	S	1	3	1	1	C1	710805	
3D DENTAL CO		CAPT W. J. KENNEDY(USN)		4	66	C1		1	1	1	1			

* PARENTHETIC UNIT INDICATES OPCON WHEN DIFFERENT FROM ORGANIZATIONAL STRUCTURE.

Unclassified

UNCLASSIFIED

TAB 21-1

[redacted] UNCLASSIFIED

MARINE CORPS COMMAND CENTER

STATUS OF FMF UNITS **

28 JULY 1971

UNIT *	NOTE	UNIT COMMANDER	LOCATION	STRENGTH USMC	STRENGTH USN	UNIT READINESS ☆ CURRENT RATE	RSN	P	S	R	T	EXPECTED RATE	BY	MAJOR EQUIPMENT
MAG-15		COL R. R. MILLER	IWAKUNI			C2	T	2	2	2	3	C1	710915	
H&MS-15		MAJ M. R. CADY		554		C2	R	1	1	2	1	C1	711001	4/TA-4F
MABS-15		MAJ R. L. BECKWITH		373	21	C2	R	2	1	2	2	C2	710731	
MATCU-60 (MAG-15)	*	1STLT C. R. HICKEY		56		C2	R	2	1	2	2	C1	710801	
VMFA-115		LTCOL R. R. POWELL		289	1	C2	X	2	2	2	3	C2	711001	14/F-4B
VMFA-232		LTCOL J. S. ROSENTHAL		318	1	C2	T	2	1	2	2	C1	710815	15/F-4J
VMCJ-1 (1ST MAW)	*	LTCOL S. S. EISENHAUER		391	1	C3	T	2	1	2	3	C3	710815	6/EA-6A, 9/RF-4B
MWSG-17		COL W. G. MC COOL	IWAKUNI			C3	R	2	2	3	2	C2	710801	
H&MS-17		LTCOL E. W. GILBERT		546	6	C3	R	2	2	3	2	C2	710901	5/C-117D, 3/C-54Q/R/S
WERS-17 (-)		MAJ A. L. FRUCCI		225		C2	R	1	2	2	2	C1	710715	
OKINAWA (1ST MAW ELEMENTS)				3021	32									
MAG-36		COL R. J. ZITNIK	FUTEMA			C2	R	1	2	2	1	C2	710924	
H&MS-36 (-)		LTCOL D. A. SPURLOCK		589		C2	R	1	1	2	1	C1	710824	24/CH-46D, 3/UH-1E
SU 1, H&MS-36 (-)		CAPT J. A. WILDER		52		C2	S	1	2	2	1	C1	710730	
MABS-36		LTCOL V. J. GUINEE, JR.		521	24	C2	R	2	1	2	2	C1	710830	
MATCU-66 (MAG-36)	*	CAPT K. R. CLARK		56		C2	P	2	1	2	2	C2	710925	
MATCU-68 (MAG-36)	*	MO L. R. COXE		23		C4	P	4	1	4	4	C3	710924	
HMM-164 (31ST MAU)	2*	LTCOL A. J. KETTERING	31ST MAU	292	3	C2	R	1	1	2	1			13/CH-46D, 4/CH-53D, 4/UH-1E
HMM-165		LTCOL P. L. MOREAU	FUTEMA	248	1	C3	R	1	2	3	1	C1	710710	20/CH-46D
HMH-462 (-)	2	LTCOL R. E. DYER		253	1	C2	R	1	1	2	1	C3	710901	16/CH-53D
VMO-6 (-)	28	LTCOL J. L. NORTON		206		C2	R	2	1	2	1	C1	710815	14/OV-10A
VMGR-152 (1ST MAW)	*	LTCOL R. W. DUPHINEY		289	1	C4	S	2	4	4	4	C3	710731	9/KC-130F
HML-367 (-)		MAJ R. SANCHO		172		C4	S	4	4	4	4	C3	710715	11/UH-1E, 21/AH-1G, 4/AH-1J
OTHERS														
DET, MASS-2 (-)			FUTEMA											
SU 1, WERS-17 (-)	12	WO E. Q. HICKS		51		C3	S	1	3	3	1	C2	710727	
SU 1, H&MS-12 (-)	27	CAPT J. A. MILLER	NAHA	49		C2	S	1	2	2	2	C1	710730	
MACS-4		LTCOL R. D. MILER	FUTEMA	272	2	C3	P	2	1	2	3	C2	710611	
3D FSR		COL R. E. ROEDER	CP FOSTER	3080	50	C2	R	2	2	2	2	C2	710815	
H&S BN		LTCOL J. B. HARRIS, SR.		1005	24	C2	X	1	2	2	2	C1	710815	
SUPPLY BN		LTCOL J. W. FRIBERG		1164	26	C2	X	3	3	3	3	C2	710815	
NOP, 3D FSR (3D FSR)	*	CAPT C. W. SHIVER		45		C1		1	1	1	1			
MAINT BN		LTCOL H. I. FREY		866		C2	X	3	2	2	3	C2	710815	2/LVTE-1, 1/106MM RR, 1/81 MORT
EASTPAC				28212	854									
FMFPAC														
I MAF		BGEN R. T. DWYER, JR.	CAMPEN			C2	T	2	1	1	2	C2	710515	
H&SCO				21										
1ST MAR DIV (-) (REIN)		BGEN R. T. DWYER, JR.	CAMPEN	14244	515	C4	P	4	2	2	4	C3	710701	
HQBN		COL R. N. BURHANS		1735	60	C4	P	4	2	2	4	C4	711001	
1ST CIT		CAPT B. B. VORONIN		20		C1		1	1	1	1			
5TH ITT	14	CAPT R. A. KAROLY				C1		1	1	1	1			
9TH ITT	14	CAPT L. J. JANSEN				C1		1	1	1	1			
19TH ITT	14	1STLT G. D. JENNINGS				C3	P	3	1	1	3	C2	710930	
21ST ITT	14	2DLT M. M. LINCOLN				C1		1	1	1	1			
23D ITT	14	CAPT R. D. TOMLIN				C1		1	1	1	1			
25TH ITT	14	CAPT H. K. LEE				C2	R	1	1	2	1	C1	710801	
2D SSCT		WO E. L. HANEY		8		C4	R	1	1	4	1	C3	710901	
SCAMP		CAPT A. L. SELLECK, JR.		24										
COMM SPT CO, 9TH COMM BN (-)		CAPT D. B. DOWNING		299		C2	R	1	1	2	1	C2	711001	
1ST CIVIL AFFAIRS GRP (CADRE)		CAPT R. S. GRISCHKOWSKY		23		C4	P	4	1	1	1	C4	711001	
1ST MARINES		LTCOL M. A. MOORE				C4	X	3	4	4	3	C3	711001	
HQCO		CAPT H. W. GARDNER		189	10	C3	S	1	3	3	2	C2	711001	
1STBN		LTCOL C. A. BARSTOW		1258	10	C4	R	3	3	4	3	C3	711001	9/106MM RR, 8/81 MORT
2DBN		LTCOL A. LUKEMAN		1038	12	C4	S	2	4	3	2	C3	711001	8/106MM RR, 10/81 MORT
3DBN		MAJ N. H. SMITH		1037	77	C3	S	3	3	3	3	C2	711001	8/106MM RR, 8/81 MORT

* PARENTHETIC UNIT INDICATES OPCON WHEN DIFFERENT FROM ORGANIZATIONAL STRUCTURE.

Unclassified

TAB 21-3

[redacted] UNCLASSIFIED

[redacted] UNCLASSIFIED

MARINE CORPS COMMAND CENTER

STATUS OF FMF UNITS**

28 JULY 1971

UNIT *	NOTE	UNIT COMMANDER	LOCATION	STRENGTH USMC	STRENGTH USN	UNIT READINESS☆ CURRENT RATE	RSN	P	S	R	T	EXPECTED RATE	EXPECTED BY	MAJOR EQUIPMENT
3D MAW		BGEN L. E. BROWN	EL TORO	10888	220	C3	T	3	2	3	3	C2	711030	
MWHS-3		LTCOL H. E. SEXTON		663	122	C2	P	2	2	2	2	C1	710930	
6TH CIT		CAPT M. C. HOWEY		14		C1		1	1	1	1			
4TH SSCT		CAPT H. G. WHITE		9		C1		1	1	1	1			
13TH FORCE DENTAL CO		CAPT J. R. EUBANK (USN)	EL TORO		40	C4	P	4	1	1	1	C3	710915	
MMSG-37		LTCOL F. R. SMOKE	EL TORO			C3	X	4	3	3	3	C2	711001	
H&MS-37 (-)		MAJ L. K. WARN		507	1	C3	P	3	2	2	2	C1	711001	4/C-117D, 2/C-54P/O
SU 1, H&MS-37 (-)		MAJ L. C. WALLACE, JR.		51		C2	P	2	1	1	1	C1	711001	
WERS-37		LTCOL M. PALLAI		213		C3	P	3	2	2	2	C2	711030	
VMGR-352 (3D MAW)	*	LTCOL G. L. CARLSON		251	1	C3	X	4	2	2	4	C2	711001	10/KC-130F
MACG-38		COL J. W. DRURY	EL TORO			C2	S	2	2	2	2	C1	711030	
H&HS-38		MAJ D. E. T. WILSON		377		C2	R	1	2	2	2	C1	710930	
1ST REDEYE PLAT		1STLT K. E. ROWE		38		C2	R	2	1	2	1	C1	710801	
3D REDEYE PLAT		1STLT J. B. DOWLING		34		C2	R	2	1	2	1	C1	710701	
2D LAAM BN		LTCOL R. D. FOSTER	YUMA	641	5	C2	X	3	1	2	2	C1	710801	
MACS-7		LTCOL J. O. GREGERSON	CAMPEN	186	2	C2	P	2	2	2	2	C1	710901	
MACS-1 (-)		MAJ W. H. ALLEN	YUMA	198	2	C3	T	2	2	2	3	C2	710901	
SU 1, MACS-1 (-) (NWU)		CAPT H. POSTHUMA		65		C1		1	1	1	1			
MWCS-38		MAJ W. T. CHWATEK	EL TORO	174		C2	R	1	1	2	1	C1	710930	
MASS-3		MAJ V. J. FULLADOSA		103		C4	P	4	1	1	2	C1	710801	
MAG-11		COL L. J. STIEN	EL TORO			C4	P	4	4	4	4	C3	710730	
H&MS-11		LTCOL H. N. LEVIN		356	1	C4	P	4	4	4	4	C3	710730	2/C117D, 4/OV-10A, 3/TA-4F
MABS-11		LTCOL C. L. COMFORT		373	16	C4	P	4	4	4	4	C3	710730	
VMFA-314		MAJ A. J. BARTEL		36		C4	N	5	4	4	5			
VMFA-323		MAJ T. G. LEACH		200		C4	P	4	2	4	4	C3	710930	14/F-4B
VMFA-334		MAJ G. PSAROS				C4	N	4	4	4	4			
VMFA-531		LTCOL R. HUTCHINSON		240		C2	X	3	2	1	3	C2	710930	14/F-4B
MAG-13		COL D. R. DAVIS	EL TORO			C4	T	4	3	4	4	C3	710930	
H&MS-13		LTCOL C. C. NEWMARK		692	1	C2	P	2	1	1	2	C1	710930	13/A-6A, 8/F-4B, 5/TA-4F
MABS-13		MAJ J. DERMODY		510	2	C2	P	2	2	1	1	C2	710930	
MATCU-65 (MAG-13)	*	CAPT D. M. TARBET	YUMA	65		C4	P	4	1	1	4	C3	710930	
MATCU-67 (MAG-13)	*	1STLT J. HANCOCK	EL TORO	22		C4	P	4	1	4	4	C3	710930	
MATCU-77 (CAIRE)(MAG-13)	*							5	5	5	5			
VMA-214		LTCOL J. J. MCCARTHY		177		C2	X	3	2	2	3	C2	711030	16/A-4F
VMA-223		MAJ A. OSEGUERA		161	1	C4	P	4	2	3	3	C3	710930	6/A-4F
VMA(AW)-225		LTCOL J.A. MANZIONE, JR.		51		C4	N	5	4	4	5			
VMA(AW)-242		LTCOL M. S. NEWBILL		154	1	C4	S	4	4	4	4	C3	710713	7/A-6A
VMCJ-3		LTCOL M. W. DINNAGE		297	1	C4	P	4	1	2	3	C3	710930	10/RF-4B, 2/EA-6A
MAG-16		COL G. L. LILLICH	SANTA ANA			C3	P	3	2	2	2	C2	710930	
H&MS-16 (-)		MAJ J. G. HILL		377		C2	P	2	2	2	2	C2	710930	5/CH-46D, 13/CH-53A, 6/UH-1E, 12/OV-10A
SU 1, H&MS-16 (-)		MAJ G. W. LEE	CAMPEN	131		C1		1	1	1	1			
MABS-16		MAJ B. G. WILKISON	SANTA ANA	416		C4	P	4	2	2	2	C3	710930	
MATCU-74 (H&MS-16 (-))	*	CAPT G. N. BROWN		47		C4	P	4	1	1	2	C3	710801	
MATCU-75 (H&MS-16 (-))	*	CAPT P. D. HAYNES	CAMPEN	30		C4	P	4	2	2	3	C3	710930	
HML-267		LTCOL J. M. MORIARTY		326	10	C3	R	2	1	3	2	C2	710930	22/UH-1E, 10/OV-10A
VMO-2		MAJ D. A. CAYLOR		46	1	C4	N	4	4	4	4			
HMH-161		LTCOL G. H. DUNN	SANTA ANA	187		C3	P	3	3	2	2	C2	710930	16/CH-46D
HMH-163		LTCOL F. A. MATHEWS		198	1	C2	P	2	1	1	1	C1	710930	21/CH-46F
HMH-351		MAJ R. F. CAPTOR		149		C4	P	4	3	4	4	C3	710930	10/CH-53A
HMH-363		LTCOL A. F. RIBBECK		180		C2	X	3	3	2	2	C2	710930	14/CH-53A

* PARENTHETIC UNIT INDICATES OPCON WHEN DIFFERENT FROM ORGANIZATIONAL STRUCTURE.

TAB 21-5

Unclassified [redacted]

UNCLASSIFIED

UNCLASSIFIED

[redacted]

MARINE CORPS COMMAND CENTER

STATUS OF FMF UNITS**

28 JULY 1971

UNIT *	NOTE	UNIT COMMANDER	LOCATION	STRENGTH USMC	STRENGTH USN	UNIT READINESS☆ CURRENT RATE	RSN	P	S	R	T	EXPECTED RATE	BY	MAJOR EQUIPMENT
2D SERV BN		COL S. DAVIS	CAMLEJ	948	21	C2	P	2	1	1	2	C1	710930	
2D MT BN		LTCOL W. S. GERICHTEN		264	5	C2	P	2	1	1	1	C1	710930	
2D ENGR BN		MAJ W. W. WIDENER		641	11	C3	P	3	1	1	3	C2	710930	
2D RECON BN		MAJ G. E. STRICKLAND		441	15	C2	T	1	1	1	2	C1	710831	
2D SP BN		MAJ R. J. KENWORTHY		493	13	C2	P	2	1	1	2	C1	710930	
2D MED BN		LCDR S. STEVENSON (USN)		154	179	C4	P	4	2	2	2	C3	710831	
2D DENTAL CO		CAPT A. P. GIAMMISSO (USN)			64	C2	R	2	1	1	1	C1	710930	
FORTPS, FMFLANT		BGEN J. C. FEGAN	CAMLEJ	5166	146	C2	P	2	1	1	2	C2	711001	
HQCO		MAJ R. M. OTTERAAEN		474		C1		1	1	1	1			
2D CIT		1STLT R. H. OSBON, JR.		16		C1		1	1	1	1			
5TH CIT														
2D FAG		COL W. W. HIXSON	CAMLEJ			C3	T	2	1	1	3	C2	710901	
HQ BTRY, 2D FAG		CAPT D. M. JORDAN		157	5	C1		1	1	1	1			
2D 8" HOW BTRY SP		MAJ G. E. GAUMONT, JR.		160		C2	X	3	1	1	2			1/M51 VTR, 6/8" HOW SP
2D 175MM GUN BTRY		MAJ L. D. VOGLER		119		C3	P	3	1	2	3	C2	710901	1/M51 VTR, 6/155 GUN SP, 6/175 GUN SP
5TH 175MM GUN BTRY SP		MAJ R. R. WRIGHT		147		C2	T	2	1	1	2	C1	710830	1/M51, 6/175 GUN SP
2D TANK BN (-)	25	LTCOL F. E. GRUBE	CAMLEJ	664	12	C3	P	3	1	1	3	C2	711001	17/M103 TK, 53/M48 TK, 5/M51 VTR, 9/M67 TK
2D AMTRAC BN (-)	21	MAJ E. E. GERDING		766	14	C4	P	4	1	1	4	C3	710901	4/LVTE-1, 11/LVTP-5 COMD, 142/LVTP-5, 4/LVTR
8TH COMM BN		LTCOL R. E. HAISLIP		625	9	C2	P	2	1	2	1	C2	710901	
8TH ENGR BN		LTCOL B. A. KAASMANN		714	13	C4	P	4	2	1	3	C2	710728	
8TH MT BN		LTCOL C. W. TONNACLIFF		323	4	C2	P	2	1	1	2	C1	710728	
2D RADIO BN	29	LTCOL J. T. BRASSFIELD		344	4	C3	P	3	1	2	2	C2	710801	
2D ANGLICO		LTCOL D. E. SCHNEIDER		277	12	C3	T	2	1	1	3	C2	710930	
2D FORCE RECON CO		MAJ B. A. GREENE		138	3	C3	T	1	1	1	3	C2	710825	
2D TOPO CO		WO J. F. MCGRORY		83	1	C3	P	3	1	1	3	C2	710901	
2D BRIDGE CO		1STLT D. C. BELL		121	1	C3	P	3	1	1	3	C2	710901	
2D HOSPITAL CO		CAPT C. LIGON (USN)		30	21	C4	P	4	1	1	4	C3	710901	
22D DENTAL CO		CAPT W.H.HAGERMAN (USN)		5	36	C4	P	4	1	1	1	C2	710901	
2D SEP SURG CO (CADRE)		LCDR G. H. ASHTON (USN)		3	11	C4	N	5	5	5	5			
9TH SEP BULK FUEL CO (CADRE)														
2D MAW		MAJGEN G. C. AXTELL	CHERPT	14382	217	C2	X	2	2	2	3	C2	711231	
MWHS-2		COL D. G. SWINFORD		688	23	C1		1	1	1	1			
12TH FORCE DENTAL CO		CAPT J. H. SMITH		1	51	C3	P	3	1	1	1	C2	710901	
8TH CIT		WO E. J. JOHNSTON		18		C1		1	1	1	1			
6TH SSCT		1STLT V. E. STROTE		7		C2	R	1	1	2	1	C1	711001	
MATCU-78 (FMFLANT)	*	CAPT E. P. BASHTR	QUANTICO	45		C3	X	4	1	2	4	C4	710731	
MWSG-27		LTCOL W. L. RICE	CHERPT			C3	P	3	1	2	2	C3	710801	
H&MS-27 (-)		LTCOL E. J. HEISE		724	10	C2	P	2	1	1	2	C1	711209	5/C-117D, 1/C-54S
SU 1, H&MS-27 (-)		CAPT K. D. MCCURRY		42		C1		1	1	1	1			
WERS-27		MAJ R. C. BAGLEY, JR.		195		C3	P	3	1	1	2	C2	711208	
VMGR-252 (2D MAW)	*	LTCOL U. V. STATZER		336	2	C3	X	3	2	2	4	C3	710901	11/KC-130F
MACG-28		COL J. W. LASETER	CHERPT			C2	P	2	2	2	2	C2	710809	
H&MS-28		MAJ E. S. OLIN		269	2	C2	T	2	1	1	2	C2	710723	
MASS-1		MAJ H. F. SAEGER		171		C3	P	3	1	1	2	C2	710930	
2D REDEYE PLAT		1STLT A. W. HEATH		35		C2	P	2	1	1	2	C2	710930	
MACS-5		MAJ J. R. THROGMORTON	BEAUFORT	222		C2	P	2	2	2	2			
MACS-6		MAJ A. M. YOUNGER	CHERPT	243		C3	T	2	2	2	3	C3	710801	
3D LAAM BN		LTCOL J. C. DIXON		555	9	C3	P	3	2	2	2	C3	710820	
MWCS-28		MAJ L. J. MITCHELL		188		C3	P	3	1	2	2	C4	710715	
MCCRTG-20		COL T. G. ELDER	CHERPT			C2	T	1	2	2	2	C3	710715	
H&MS-20		LTCOL R. C. BARRETT		602	2	C2	X	1	1	2	3	C1	710901	
VMFAT-201		LTCOL R. H. SCHULTZ		347	3	C3	X	3	1	2	4	C3	710815	4/F-4B, 25/F-4J
VMAT(AW)-202		LTCOL C. G. LAWSON		307	3	C4	R	2	2	4	3	C4	710715	14/A-6A, 3/TC-4C
VMT-203		LTCOL S. M. WILLIAMS		181	3	C3	T	2	1	1	3	C4	710715	19/TA-4F, 5/TA-4J

*PARENTHETIC UNIT INDICATES OPCON WHEN DIFFEFENT FROM ORGANIZATIONAL STRUCTURE.

Unclassified

[redacted]

TAB 21-7

UNCLASSIFIED

UNCLASSIFIED

MARINE CORPS COMMAND CENTER

STATUS OF FMF UNITS**

28 JULY 1971

UNIT*	NOTE	UNIT COMMANDER	LOCATION	STRENGTH USMC	STRENGTH USN	UNIT READINESS☆ CURRENT RATE	RSN	P	S	R	T	EXPECTED RATE	EXPECTED BY	MAJOR EQUIPMENT
MHTG-40		COL R. B. ENGESSER	NEW RIVER			C1		1	1	1	1			
H&MS-40		MAJ J. P. KIZER		267	1	C1		1	1	1	1			
HMHT-401		LTCOL H. D. GRESS, JR.		124		C1		1	1	1	1			10/CH-53D
HMHT-402		LTCOL J. L. FELTER		163		C1		1	1	1	1			19/CH-46F
MAG-14		COL W. R. NOWAINICK	CHERPT			C3	X	3	2	2	4	C2	710801	
H&MS-14		LTCOL J. D. DUNN		646		C2	P	2	1	1	2	C2	711001	1/A-6A, 2/EA-6A, 6/F-4B, 4/TA-4F
MAB-14 (-)		MAJ C. M. DOYLE		309	9	C3	P	3	1	2	1	C3	711001	
SU 1, MABS-14 (-)		MAJ B. L. MEEK	BOGUE, NC	231		C1		1	1	1	1			
MATCU-61		CAPT G. P. HAYES		60		C2	P	2	1	1	2	C2	710715	
VMCJ-2 (-)		LTCOL J. L. GREEN	CHERPT	355	3	C2	R	1	1	2	2	C2	711001	14/EA-6A/ 9/RF-4B
DET 60, VMCJ-2 (6THFLT)	*16		USS SARATOGA	143	1	C1		1	1	1	1			4/EA-6A
VMA(AW)-121		MAJ E. A. BIRZER	CHERPT	193	1	C3	P	3	1	3	2	C2	710801	11/A-6A
VMA(AW)-224	30	LTCOL B. R. STANDLEY		281	3	C3	P	1	1	3	2	C2	710616	12/A-6A
VMA(AW)-332		LTCOL P. R. JONES, JR.		180	2	C2	P	2	1	1	2	C1	710831	11/A-6A
VMFA-312		MAJ R. G. KROPP		181		C4	P	4	2	3	4	C4	711001	7/F-4B
DET 14, 2D MAW (NAS, KEY WEST)	*		KEY WEST	84		C1		1	1	1	1			3/F-4B
MAG-26		COL G. R. HUNTER	NEW RIVER			C1		1	1	1	1	C1	7107020	
H&MS-26		MAJ C. E. CANNON		586		C2	X	2	1	1	1	C2	710721	31/CH-46F, 17/CH-53A, 11/CH-53D
MABS-26		MAJ Z. V. LAMASCUS		477	44	C4	P	4	1	1	1	C4	710901	
MATCU-64 (MAG-26)	*	CAPT D. W. ESMOND		42		C4	P	4	1	2	3	C3	710915	
VMO-1		LTCOL R. D. MYERS		188		C3	P	3	2	3	1	C3	710806	16/OV-10A
HMA-269		LTCOL L. W. SMITH		243		C4	T	4	1	1	4	C2	710901	26/AH-1J, 6/UH-1E, 10/UH-1N
HML-167		LTCOL H. S. LOWREY												
HMM-162 (32D MAU)	*5	LTCOL J. W. ALBER	32D MAU	237	3	C1		1	1	1	1			12/CH-46F, 4/CH-53D, 2/UH-1E
HMM-261		MAJ D. R. ALLEN, JR.	NEW RIVER	269		C2	R	1	1	2	1	C2	710901	23/CH-46F
HMM-263		LTCOL V. W. HAZELBAKER	QUANTICO			C4	N	5	5	5	5			20/CH-46D, 4/CH-46F
HMM-264		MAJ R. K. GOFORTH	NEW RIVER	264		C1		1	1	1	1			28/CH-46F
HMH-362		MAJ R. F. WILEY		185		C2	R	1	1	2	1	C2	710901	16/CH-53D
HMH-461		LTCOL D. E. WEBB		193		C1		1	1	1	1	C2	710801	1/CH-53A, 16/CH-53D
MAG-31		COL N. B. MCCRARY	BEAUFORT			C3	P	3	1	2	3	C2	710711	
H&MS-31		MAJ G. B. FERRINGTON		671		C3	R	2	1	3	2	C3	710815	1/C-117D, 2/F-4B, 4/F-4J, 3/TA-4F
MABS-31		MAJ J. L. CUNNINGHAM		328	18	C3	P	3	1	1	3	C3	710903	
MATCU-69		CAPT W. T. FARROW		39		C4	P	4	1	1	4	C4	710731	
VMFA-251		MAJ J. M. MEAD		274	1	C3	T	2	1	2	3	C2	710801	13/F-4B, 7/F-4J
VMFA-333 (CVA-66)	*3	LTCOL R. PLANT	USS AMERICA	303	1	C2	R	1	2	2	2			11/F-4J
VMFA-451		LTCOL R. J. WEISS	BEAUFORT	267	1	C3	T	3	1	3	3	C2	710930	18/F-4J
MAG-32		COL H. HUNTER, JR.	BEAUFORT			C2	X	2	2	3	3	C2	710813	
H&MS-32		MAJ R. L. UPCHURCH		519		C2	X	3	2	2	2	C2	710801	1/C-117D, 5/TA-4F
MABS-32		MAJ H. R. PALMATEER		386	17	C2	P	2	1	2	1	C2	710805	
MATCU-63		1STLT M. M. HENDERSON		36		C3	X	4	1	2	2	C3	710805	
VMA-324		LTCOL G. J. ERTLMEIER		179	1	C2	X	2	2	2	3	C2	710730	5/A-4E, 12/A-4M
VMA-331		LTCOL P. E. BROOKSHIRE		174	1	C4	R	2	1	4	2	C3	710722	20/A-4E
VMA-513		LTCOL C. M. BAKER		132	2	C4	T	4	3	2	4	C3	711101	6/AV-8A
2D FSR		COL E. C. DRESBACH, JR.	CAMLEJ	2103	27	C3	P	3	1	2	3	C4	711001	
H&SBN		LTCOL J. B. CANTIENY		609	19	C3	P	3	2	2	3	C2	710801	
SUPPLY BN		LTCOL D. J. BEARD		751	8	C4	P	4	1	1	4	C4	711001	
MAINT BN		LTCOL C. L. BOOTH		743		C3	P	3	1	1	3	C4	711001	1/LVTP-5, 3/LVTR, 1/M103 TK, 1/M48 TK, 4/M51 VTR, 1/M67 TK

* PARENTHETIC UNIT INDICATES OPCON WHEN DIFFERENT FROM ORGANIZATIONAL STRUCTURE.

TAB 21-8

Unclassified

UNCLASSIFIED

UNCLASSIFIED

MARINE CORPS COMMAND CENTER

STATUS OF FMF UNITS**

28 JULY 1971

UNIT	NOTE	UNIT COMMANDER	LOCATION	STRENGTH		UNIT READINESS☆								MAJOR EQUIPMENT
						CURRENT						EXPECTED		
				USMC	USN	RATE	RSN	P	S	R	T	RATE	BY	

UNIT READINESS RATING CATEGORY

C-1 FULLY COMBAT READY
C-2 SUBSTANTIALLY COMBAT READY
C-3 MARGINALLY COMBAT READY
C-4 NOT COMBAT READY

READINESS ABBREVIATIONS

P PERSONNEL READINESS
S SUPPLIES/EQUIPMENT ON HAND
R EQUIPMENT READINESS
T TRAINING READINESS
X COMMANDERS SUBJECTIVE JUDGEMENT
N RESOURCE ALLOCATION BY COGNIZANT SERVICE DOES NOT PERMIT A HIGHER C-RATING

NOTES

1. BLT 3/4 BREAKDOWN ON TAB 34.
2. 31ST MAU BREAKDOWN ON TAB 34.
3. ABOARD USS AMERICA (CVA-66).
4. ASSIGNED III MAF
5. LANFOR6THFLT 1-71 (32D MAU) BREAKDOWN ON TAB 36.
6. LANFORCARIB 1-71 BREAKDOWN ON TAB 36.
7. AT FUJI TRNG (3D RECON BN (-)(REIN), CO B, 3D TANK BN AND BTRY F/2/12).
8. H&SCO, CO B, 1ST SP BN IN CADRE STATUS.
9. GTMO BN (REIN) BREAKDOWN ON TAB 36-2.
10. TRUCK CO, 1ST SERV BN (CADRE).
11. CO C, 7TH ENGR BN (CADRE).
12. THIS UNIT IS BOTH ADCON/OPCON TO WERS-17 (-).
13. AIR ALERT BATTALION.
14. PERSONNEL AND EQUIPMENT CARRIED IN HQBN, 1ST MARDIV.
15. VIEQUES TRNG (DET, H&SCO, CO A, 1/2).
16. ABOARD USS SARATOGA (CVA-60).
17. INCLUDES STRENGTH CO D, 7TH ENGR BN AND 1ST PLAT, 1ST BRIDGE CO.
18. H&SCO, CO B, CO C, AND CO D, 1ST TANK BN (CADRE).
19. H&SCO, CO B, AND CO C, 3D AMTRAC BN (CADRE).
20. PERSONNEL AND EQUIPMENT CARRIED IN HQBN, 2D MARDIV.
21. ONE PLATOON IS DEPLOYED WITH LANFOR6THFLT 1-71 AND ALSO ONE PLATOON WTIH LANFORCARIB 1-71.
22. PERSONNEL AND EQUIPMENT CARRIED IN HQBN, 3D MARDIV.
23. UNASSIGNED.
24. SANGLEY AUGMENTATION FORCE (DET, 4TH MARINES w/2 OFF AND 152 ENL) AT SANGLEY PT, R.P.I.
25. ONE PLATOON IS DEPLOYED WITH LANFOR6THFLT 1-71, ONE PLATOON WITH LANFORCARIB 1-71 AND ONE PLATOON WITH THE GTMO BN.
26. STRENGTH INCLUDES DET, H&SCO, DET, ENGR SPT CO, AND CO A, 1ST ENGR BN.
27. THIS UNIT IS BOTH ADCON/OPCON TO MAG-12, HOWEVER, IS PHYSICALLY LOCATED ON OKINAWA WITH THEIR STRENGTH CARRIED UNDER OKINAWA.
28. FOUR OFFICERS AND 15 ENLISTED ATTACHED TO VAL-4 FOR EVALUATION OF YOV-10D.
29. TWO OFF & 32 ENL DEPLOYED TO MOROCCO & 1 OFF & 10 ENL DEPLOYED TO GTMO ON A PERMANENT BASIS.
30. DET, VMA(AW)-224 AT FALLON, NEVADA W/9 A-6A A/C (17-31JUL71).

** SOURCE: MARES FORSTAT REPORT DATED 7 JULY 1971.

UNCLASSIFIED

TAB 21-9

Unclassified

UNCLASSIFIED

[redacted]

MARINE CORPS COMMAND CENTER

RECAPITULATION OF FMF ACTUAL STRENGTHS*

FMF

28 JULY 1971

UNIT	GROUND		AIR		GRAND TOTAL	
	USMC	USN	USMC	USN	USMC	USN
FMF	63,206	2,224	36,138	601	99,344	2,825

PACIFIC

FMFPAC	38,804	1,397	21,677	384	60,481	1,781
MIDPAC	3,744	133	1,942	25	5,682	158
HQ, FMFPAC	980	36	63		1,043	36
1ST MARBDE	2,021	84	1,875	25	3,896	109
OTHER	743	13			743	13
WESTPAC (III MAF)	17,736	630	8,851	139	26,587	769
III MAF (OKINAWA)	17,736	630	3,021	32	20,757	662
HQ, III MAF	131				131	
3D MARDIV (-)(REIN)	14,525	580			14,525	580
1ST MAW			3,021	32	3,021	32
3D FSR	3,080	50			3,080	50
III MAF (JAPAN)			5,830	107	5,830	107
1ST MAW			5,830	107	5,830	107
(1) LANFOR 7TH FLT	2,837	129	370	3	3,207	132
31ST MAU	1,420	63	353	3	1,773	66
BLT 3/4	1,417	66	17		1,434	66
EASTPAC	17,324	634	10,888	220	28,212	854
HQ, I MAF	21				21	
1ST MARDIV (-)(REIN)	14,244	515			14,244	515
FORTRPS, FMFPAC	1,495	75			1,495	75
3D MAW			10,888	220	10,888	220
1ST FSR	1,564	44			1,564	44

ATLANTIC

FMFLANT	24,402	827	14,461	217	38,863	1,044
EAST COAST	24,402	827	14,471	217	38,863	1,044
HQ, FMFLANT	726	4	79		805	4
2D MARDIV	16,407	650			16,407	650
FORTRPS, FMFLANT	5,166	146			5,166	146
2D MAW			14,382	217	14,382	217
2D FSR	2,103	27			2,103	27
(2) CARIBBEAN	2,191	82			2,191	82
GTMO BN (REIN)	1,001	34			1,001	34
LANFORCARIB 1-71	1,190	48			1,190	48
(2) MEDITERRANEAN	1,472	69	684	5	2,156	74
LANFOR6THFLT 1-71 (32D MAU)	1,472	69	238	3	1,710	72
DET 60, VMCJ-1			143	1	143	1
VMFA-333			303	1	303	1

NOTES:
(1) STRENGTH INCLUDED IN III MAF OKINAWA.
(2) STRENGTH INCLUDED IN EAST COAST.

Unclassified

UNCLASSIFIED

*SOURCE: MARES FORSTAT REPORT DATED 7JUL71.

TAB 22

[redacted]

[redacted] UNCLASSIFIED

MARINE CORPS COMMAND CENTER

DISTRIBUTION OF MAJOR GROUND EQUIPMENT AND AIRCRAFT

GROUND EQUIPMENT

28 JULY 1971

EQUIPMENT		NOTE	TOTAL EQUIP	JAPAN	OKI	7TH FLT MAU s	MID PAC	CAM PEN	29 PALMS			CAM LEJ	GTMO	6TH FLT MAU s	CARIB	OTHER
81MM MORTAR	M29		204		33	16	16	67				48	8	8	8	
106MM RR	M40A1C		204		33	16	16	67				48	8	8	8	
107MM	M30		6					6								
105MM HOW TD	M101A	4	162	6	42	12	18	30				42		6	6	
155MM HOW TD	M114A1		5					5								
155MM HOW SP	M109		35		17							18				
155MM GUN SP	M53		32						26			6				
175MM GUN SP			24						12			12				
8" HOW SP	M110		12		2				4			6				
90MM GUN TANK	M48	4	137	5	43	10		25				37	7	5	5	
120MM GUN TANK	M-103		33					15				13	5			
FLAME TANK	M-67		25		8			7				8	2			
VTR	M-51		28		6			5	4			13				
LVTR	M-51		14		3		1	3				7				
LVTP-5 COMD			32		8	2	3	8				9		1	1	
LVTP-5			354		77	20	44	70				123		10	10	
LVTE-1			16		7			5				4				

AIRCRAFT

AIRCRAFT	NOTE	TOTAL A/C	JAPAN	OKI	7TH FLT MAU s	MID PAC	EL TORO	SANTA ANA	YUMA	CH PT	BEAU	NEW RIVER	6TH FLT MAU s	CARIB	OTHER
FIXED WING															
C-117D		19	5			1	6			5	2				
KC-130F		30		9			10			11					
C-54P/Q/R/S		6	3				2			1					
TA-4F		67	10			2	8		16	23	8				
TA-4J		7							2	5					
TC-4C		3								3					
T-28B		5				5									
AV-8A		6									6				
A-6A	7	81	12				20			40					9
EA-6A	1	28	6				2			16					4
RF-4B		28	9				10			9					
F-4B	3	115	14			8	36		22	17	15				3
F-4J	5	108	15			28				25	28				12
A-4E		92	41						26		31				
A-4F		22					22								
A-4M		12									12				
OV-10A	2	62		14		6	4	12				16			10
US-2B		1				1									
HELICOPTERS															
UH-1E	2	62		14	4	8						6	2		22
UH-1N		10										10			
AH-1G		21		21											
AH-1J		30		4								26			
CH-46A		5				5									
CH-46D	5	128		44	13	30		21							20
CH-46F	6	159						42				101	12		4
CH-53A		66						48				18			
CH-53D		95		16	4	18						53	4		
VH-34D		1				1									
UV-34D		2				2									

NOTES:
1. DET, VMCJ-2 ABOARD USS SARATOGA (CVA-60) IN "OTHER" (4/EA-6A A/C ASSIGNED). AFLOAT MED.
2. AT CAMPEN IN "OTHER".
3. AT KEY WEST IN "OTHER".
4. AT FUJI TRNG AREA, 3D RECON BN (-) WITH CO B, 3D TANK BN (-) AND BTRY F/2/12.
5. ABOARD USS AMERICA (CVA-66)(VMFA-333)(12/F-4J) IN "OTHER".
6. AT QUANTICO "OTHER".
7. AT FALLON, NEVADA FOR TRAINING (17-31JUL71).

Unclassified

UNCLA[redacted]IED

TAB-23

[redacted]

MARINE CORPS COMMAND CENTER

UNCLASSIFIED

FLEET MARINE FORCE DISPOSITION

28 JULY 1971

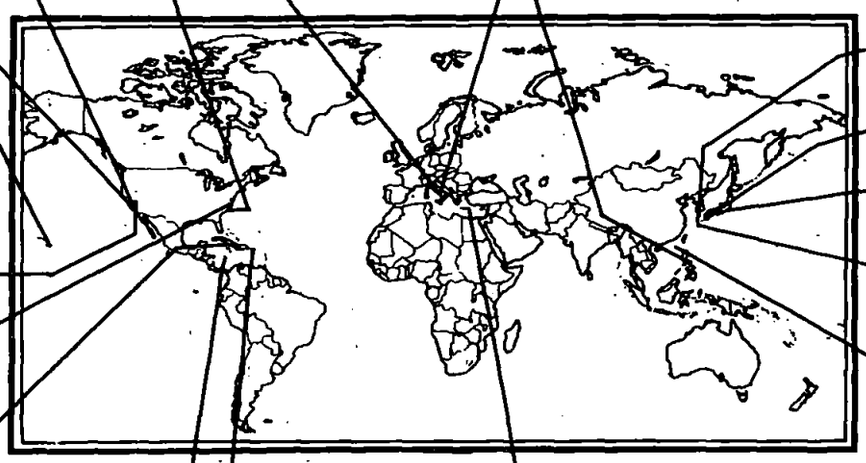

DISTRIBUTION BY BATTALION/SQUADRON

	INF BNS	VMFA	VMA	VMA(AW)	VMCJ	HMM	HMH	*HML	VMO	VMGR
WESTPAC	6	2	2	1	1	2	1	1	1	1
OKINAWA	(4)	(2)	(2)	(1)	(1)	(1)	(1)	(1)	(1)	(1)
JAPAN										
LANDING FORCE	(2)					(1)				
MIDPAC	2	3				1	1			
HAWAII	(2)	(3)				(1)	(1)			
EASTPAC	10	4	2	2	1	2	2	1	1	1
EL TORO/SANTA ANA		(4)	(2)	(2)	(1)	(2)	(2)			(1)
CAMPEN	(10)							(1)	(1)	
ATLANTIC	8	4	3	3	1	3	2	*2	1	1
CAMP LEJEUNE	(6)									
CHERRY POINT		(1)		(3)	(1)					(1)
BEAUFORT		(3)	(3)							
NEW RIVER						(2)	(2)	*(2)	(1)	
QUANTICO						(1)				
CARIB	(2)									
EUROPE	1					1				
MEDITERRANEAN	(1)					(1)				
GRAND TOTAL	27	13	7	6	3	9	6	4	3	3

*HMA-269, MAG-26 AT NEW RIVER, N. C.

UNCLASSIFIED

Unclassified [redacted]

TAB 31-1

[redacted]

UNCLASSIFIED

MARINE CORPS COMMAND CENTER

28 JULY 1971

FLEET MARINE FORCE MOVEMENTS

	UNIT	ETD/ATD	FROM	DESTINATION	ETA/ATA
	MOVEMENTS 22 - 28 JULY 1971				
(1)	VMFA-333	23JUL71	OPS WESTERN MED	NAPLES, ITALY	24JUL71
(3)	DET 60, VMCJ-2	21JUL71	CORFU, GREECE	OPS EASTERN MED	22JUL71
		28JUL71	OPS EASTERN MED	SUDA BAY, CRETE	29JUL71
(4)	LANFOR7THFLT	21JUL71	TYPHOON EVASION AT SEA	HONG KONG	23JUL71
	(31ST MAU)	26JUL71	HONG KONG	ARGOPS SOUTH CHINA SEA	26JUL71
		28JUL71	ARGOPS SOUTH CHINA SEA	MINDORO ISLAND, R.P.I.	28JUL71
(5)	DET, VMA-324	23JUL71	CHINA LAKE, CALIFORNIA	BEAUFORT, SOUTH CAROLINA	23JUL71
(8)	LANFORCARIB 1-71	28JUL71	PANAMA, CANAL ZONE	JAMAICA	29JUL71
	(BLT 1/6)				
(9)	51ST MAU (USMCR)	27JUL71	CAMP PENDLETON, CALIFORNIA		
(9)	54TH MAU (USMCR)	27JUL71	CAMP LEJEUNE, NORTH CAROLINA		
	PROJECTED MOVEMENTS 29 JULY - 4 AUGUST 1971				
(1)	VMFA-333	2AUG71	NAPLES, ITALY	OPS WESTERN MED	3AUG71
(3)	DET 60, VMCJ-2	30JUL71	SUDA BAY, CRETE	OPS AEGEAN SEA	31JUL71
(4)	LANFOR7THFLT	31JUL71	MINDORO ISLAND, R.P.I.	ARGOPS SOUTH CHINA SEA	1AUG71
	(31ST MAU)	1AUG71	ARGOPS SOUTH CHINA SEA	MANILA, R.P.I.	2AUG71
(5)	VMA(AW)-224	31JUL71	FALLON, NEVADA	CHERRY POINT, NORTH CAROLINA	31JUL71
(8)	LANFORCARIB 1-71	1AUG71	JAMAICA	MOREHEAD CITY, NORTH CAROLINA	5AUG71
	(BLT 1/6)				
	HMA-773 (USMCR)	1AUG71	ACTIVATED (SANTA ANA, CALIFORNIA)		

NOTES:

(1) UPKEEP NAPLES, ITALY, FROM 24JUL-2AUG71, SCHEDULED FOR OPERATIONS IN THE TYRRHENIAN SEA/WESTERN MEDITERRANEAN AREAS FROM 3-8AUG71.

(2) UPKEEP NAPLES, ITALY, DURING THE PERIOD 23JUL-6AUG71.

(3) CONDUCTING OPERATIONS IN THE IONIAN SEA/EASTERN MEDITERRANEAN AREAS (22-28JUL71). SCHEDULED FOR ANCHORAGE AT SUDA BAY, CRETE (29-30JUL71) AND OPERATIONS IN THE AEGEAN SEA (31JUL-4AUG71).

(4) DEPARTED HONG KONG ON 21JUL71 AS AN EVASIVE ACTION DUE TO TYPHOON LUCY AND RETURNED TO HONG KONG ON 24JUL71. ARGOPS WERE CONDUCTED ON 26-27JUL71 AND ARE NOW CONDUCTING A PHIBLEX ON MINDORO ISLAND, R.P.I. DURING THE PERIOD 28-31JUL71. THE PHIBLEX IS BEING CONDUCTED TO PROVIDE THE PARTICIPANTS (USN SHIPPING/EMBARKED USMC PERSONNEL) THE OPPORTUNITY TO MAINTAIN THE READINESS OF THE LANFORSEVENTHFLT (31ST MAU) FOR CONTINGENCY OPERATIONS. ARGOPS SOUTH CHINA SEA (1AUG71) AND PORT VISIT IN MANILA (2-4AUG71) ARE SCHEDULED AFTER THE PHIBLEX.

(5) DET VMA-324 CONDUCTED TRAINING AT CHINA LAKE, CALIFORNIA DURING THE PERIOD 10-23JUL71 AND RETURNED TO BEAUFORT, SOUTH CAROLINA ON 23JUL71. VMA(AW)-224 IS CONDUCTING TRAINING AT FALLON, NEVADA, FROM 17-31JUL71. ETR CHERRY POINT, NORTH CAROLINA, IS 31JUL71.

(6) CG, I MAF ACTIVATED THE 7TH MAB (HQ, 7TH MAB, 7TH MARINES AND PROV MAG-50) FOR PLANNING ON 1JUL71 FOR PARTICIPATION IN ROPEVAL 3-71. A MAB SIZE AMPHIBIOUS EXERCISE TO BE CONDUCTED IN THE CAMP PENDLETON/CLEVELAND NATIONAL FOREST AREAS DURING THE PERIOD 8-17SEP71. LANDING FORCE OPERATIONS WILL BE DESIGNED TO TRAIN FORCES IN THE PLANNING AND EXECUTION OF AMPHIBIOUS OPERATIONS INVOLVING THE TECHNIQUE OF STAND-OFF AMPHIBIOUS ASSAULT AND ASPECTS OF THE SEA-BASING CONCEPT. BGEN P. G. GRAHAM, CG, FORTRPS FMFPAC, IS DESIGNATED AS CG 7TH MAB.

(7) CG FMFLANT ACTIVATED THE 8TH MAB (HQ, 8TH MAB, 34TH MAU AND PROV MAG-40) FOR PLANNING AND PARTICIPATION IN EXERCISE DEEP FURROW-71. EXERCISE DEEP FURROW-71 IS A JOINT AND COMBINED NATO EXERCISE TO BE CONDUCTED DURING THE PERIOD 9-20OCT71 TO INCLUDE AMPHIBIOUS LANDING IN TURKISH THRACE BY A COMBINED U. S. AND UNITED KINGDOM/ITALIAN LANDING FORCE. BGEN T. H. MILLER, JR., AWC 2D MAW, IS DESIGNATED AS CG 8TH MAB.

(8) CONDUCTING A JUNGLE EXERCISE IN PANAMA, CANAL ZONE DURING THE PERIOD 17-27JUL71. ENROUTE (28-29JUL71) JAMAICA FOR A PORT VISIT DURING THE PERIOD 30-31JUL71. ENROUTE (1-5AUG71) MOREHEAD CITY, NORTH CAROLINA.

(9) THE 51ST MAU, USMCR, (2D BN, 23D MAR (SANTA MONICA, CALIF.), PROV MAG-46 (SANTA ANA, CALIF.), VMA-543 (GLENVIEW, ILL.), HMM-764 (LOS ALAMITOS, CALIF.) AND HMM-770 (WHIDBEY ISLAND, WASH.)), IS CONDUCTING AN AMPHIBIOUS TRAINING EXERCISE, MAULEX 2-71 AT CAMP PENDLETON DURING THE PERIOD 27-29JUL71. THE 54TH MAU, USMCR, (1ST BN, 25TH MAR (BOSTON, MASS.), PROV MAG-41 (DALLAS, TEX.), VMA-131 (NEW YORK, N.Y.), HMM-777 (DALLAS, TEX.) AND HMM-766 (DETROIT, MICH.), IS CONDUCTING AN AMPHIBIOUS TRAINING EXERCISE, MAULEX 7-71, AT CAMP LEJEUNE DURING THE PERIOD 27-29JUL71.

UNCLASSIFIED

Unclassified

TAB 31-2

[redacted]

UNCLASSIFIED [redacted]

MARINE CORPS COMMAND CENTER

FMF PACIFIC UNIT LOCATIONS AND STRENGTHS*
(MIDPAC/EASTPAC)

28 JULY 1971

MIDPAC

FMFPAC

HQ, FMFPAC

1st MAR BDE

HQ, 1ST MAR BDE (KANEOHE)

3D MARINES (-)(REIN)
- 1/3
- 2/3

MAG-24
- VMFA-212 (F-4J)
- VMFA-235 (F-4J)
- VMFA-122 (F-4B)
- HMM-262 (CH-46D)
- HMH-463 (CH-53D)
- DET, VMO-6 (-) (OV-10A)
- DET, HML-367(-) (UH-1E)

MIDPAC STRENGTH RECAPITULATION	USMC	USN
HQ, FMFPAC	1,043	36
HQ, 1ST MAR BDE	280	14
3D MAR(-)(REIN)	1,386	70
SERVICE/SUPPORT UNITS	355	
MAG-24	1,875	25
OTHER	772	13
GRAND TOTAL MIDPAC	5,711	158

EASTPAC

I MAF

HQ, I MAF (CAMP PENDLETON)

1ST MAR DIV (-) (REIN)

1ST MARINES
- 1/1
- 2/1
- 3/1

5TH MARINES 3/3 (CADRE)
- 1/5
- 2/5
- 3/5

7TH MARINES
- 1/7
- 2/7
- 3/7

FORTRPS FMFPAC

HQ, FORTRPS FMFPAC (29 PALMS)

3D MAW

HQ, 3D MAW (EL TORO)

MAG-13 (EL TORO)
- VMA-223 (A-4F)
- VMA-214 (A-4F)
- VMA(AW)-242 (A-6A)
- VMCJ-3 (RF-4B/EA-6A)
- VMFA-314
- VMFA-323 (F-4B)
- VMFA-334
- VMFA-531 (F-4B)
- VMA(AW)-225

MWSG-37 (EL TORO)
- VMGR-352 (KC-130F)

MHTG-30 (SANTA ANA)
- HMHT-301 (CH-53A)
- HMMT-302 (CH-46F)

MAG-16 (SANTA ANA)
- HMM-161 (CH-46D)
- HMM-163 (CH-46F)
- HMH-361 (CH-53A)
- HMH-363 (CH-53A)

MAG-16 ELEMENTS (CAMPEN)
- VMO-2
- HML-267 (OV-10A/UH-1E)

MCCRTG-10 (YUMA)
- VMFAT-101 (F-4B)
- VMAT-102 (A-4E)
- VMT-103 (TA-4F/J)

1ST FSR

EASTPAC	USMC	USN
HQ, I MAF	21	
1ST MAR DIV (-) (REIN)	14,244	515
HQ, FORTRPS FMFPAC	1,495	75
3D MAW	10,888	220
1ST FSR	1,564	44
GRAND TOTAL EASTPAC	28,212	854

*SOURCE: MARES FORSTAT REPORT DATED 7JUL71.

Unclassified
UNCLASSIFIED [redacted]

TAB 32

UNCLASSIFIED

MARINE CORPS COMMAND CENTER

FMF PACIFIC UNIT LOCATIONS AND STRENGTHS AND OSD CEILING CONSIDERATIONS (WESTPAC)

28 JULY 1971

RVN

USMC TRANSITIONAL SUPPORT FORCE

NAVFORV	5
HQ STAFF MACV	49
JUSPAO	4
SAE	2
I CORPS	3
NAV AIV GRU	80
SOG	17
AID DEPT STATE	3
DEF COM AGCY	11
SUB UNIT 1, 1ST ANGLICO	180
EMBASSY SECURITY	156
CORDS	5
NOG DET YOV-10	21
DCPG LNO	3
DET, H&HS-18	20
DOD SPEC REP	3
ROK LOG TEAM	13
CREDIT ACCOUNT	60
MEDTC	1
WESTPAC TRANS OFF	1
TOTAL - OSD PROGRAM XIII SPACE AUTHORIZATION	637

	USMC	USN
OSD PROGRAM XIII SPACE AUTHORIZATION	637	
SUB UNIT 1, 1ST ANGLICO	168	10
MACV STAFF/MACV FIELD	167	
NAVAIVGRU/MACV UNITS	42	
OTHERS	152	
TOTAL RVN STRENGTH AS OF 22JUL71	529	10

OKINAWA

III MAF (TF-79)

HQ, III MAF

3D MARDIV (-) (REIN) (TF-79.2)

HQ, 3D MARDIV (-)(REIN)
- 4TH MARINES
  - 1/4
  - 2/4
  - 3/4 (BLT)
- 9TH MARINES
  - 1/9
  - 2/9 (31ST MAU)
  - 3/9

1ST MAW

MAG-36

VMGR-152	(KC-130F)
VMO-6 (-)	(OV-10A/UH-1E)
HMH-462	(CH-53D)
HMM-164	(CH-46D/CH-53D/UH-1E)(31ST MAU)
HMM-165	(CH-46D)
HML-367	(UH-1E/AH-1G/J)

3D FSR

		USMC	USN
	OSD PROGRAM XIII SPACE AUTHORIZATION	19,249	934
	OKINAWA STRENGTH RECAPITULATION		
	III MAF		
	HQ, III MAF	131	
(3)	3D MARDIV (-)(REIN)	12,708	580
	1ST MAW ELEMENTS	3,021	32
	3D FSR	3,080	50
(1)	III MAF TOTAL	18,940	662
	OTHERS		
	MCB CAMP BUTLER/NON FMF	1,267	25
	NON-DEPLOYABLE CASUALS	0	
	SVN ORIGINATED PATIENTS	3	
	OTHER TOTAL	1,270	25
	GRAND TOTAL OKINAWA STRENGTH AS OF 15JUL71.	20,210	687

JAPAN

1ST MAW (TF-79.3)

HQ, 1ST MAW

MAG-12

VMA-211	(A-4E)
VMA-311	(A-4E)
VMA(AW)-533	(A-6A)

MAG-15

VMFA-115	(F-4B)
VMFA-232	(F-4J)
VMCJ-1	(EA-6A/RF-4B)

		USMC	USN
	OSD PROGRAM XIII SPACE AUTHORIZATION	7,000	
	JAPAN STRENGTH RECAPITULATION		
	HQ, 1ST MAW	853	54
	1ST MAW	5,251	53
(2)	NON-FMF	1,043	
	GRAND TOTAL JAPAN STRENGTH AS OF 15JUL71.	7,147	107

NOTES
(1) LESS ONE MAU.
(2) INCLUDES MCAS, IWAKUNI, MB YOKOSUKA, MB SASEBO, AND CO "E", MAR SPT BN.
(3) SANGLEY AUGMENTATION FORCE (DET, 4TH MARINES) CONSISTING OF 2 OFF AND 152 ENL INCLUDED IN 3D MARDIV (-) (REIN) STRENGTH.

SOURCES: RVN STRENGTH: COMUSMACV WEEKLY STRENGTH REPORT MSG 240716ZJUL71.

OKI/JAPAN STRENGTH: FMFPAC WESTPAC STRENGTH VERIFICATION MSG 210035ZJUL71.

UNCLASSIFIED

Unclassified

TAB 33

UNCLASSIFIED [redacted]

MARINE CORPS COMMAND CENTER

CHRONOLOGY OF SIGNIFICANT EVENTS

28 JULY 1971

DATES	LOCATION	UNITS	REMARKS
15JUN71	FUTEMA, OKINAWA	MACS-8, MACG-18, 1ST MAW	MACS-8 DEACTIVATED 150530ZJUN71.
26JUN71	DANANG, RVN	FLC	FLC DEACTIVATED 260900ZJUN71.
27JUN71	DANANG, RVN	3D MAB	AT 270400ZJUN71 HQ 3D MAB WAS DEACTIVATED AND MAJGEN A. J. ARMSTRONG, CG 3D MAB, DEPARTED DANANG ENROUTE TO HQ FMFPAC, HAWAII. WITH THE DEACTIVATION OF HQ 3D MAB, ALL 13593 OSD SPACES SCHEDULED FOR REDEPLOYMENT/DEACTIVATION DURING INCREMENT VII (KEYSTONE ORIOLE (ALPHA)) HAVE EITHER REDEPLOYED FROM RVN OR HAVE BEEN DEACTIVATED, LEAVING A TRANSITIONAL SUPPORT FORCE OF 637 PROGRAM XIII OSD SPACES.
30JUN71	ATSUGI, JAPAN SANGLEY PT., R.P.I.	MB, ATSUGI MB, SANGLEY PT.	MB, ATSUGI, JAPAN, DEACTIVATED 30 JUNE 1971. MB, SANGLEY PT., R.P.I. DEACTIVATED 30 JUNE 1971
30JUN71	29 PALMS, CALIF.	CO A (REIN) & DET, HQCO, 11 TH ENGR BN, FORTRPS FMFPAC	CO A (REIN) AND DET, HQCO, 11TH ENGR BN DEACTIVATED 301600ZJUN71.
30JUN71	BEAUFORT, S.C.	MACS-9, MACG-28, 2DMAW	MACS-9 DEACTIVATED 30JUN71.
1JUL71	IWAKUNI, JAPAN CHERRY PT,N.C. EL TORO, CALIF GLENVIEW, ILL.	1ST MAW 2D MAW 3D MAW 4TH MAW	DEACTIVATIONS MWHG-1 AND MWFS-1, 1ST MAW MWHG-2 AND MWFS-2, 2D MAW MWHG-3 AND MWFS-3, 3D MAW MWHG-4 (GLENVIEW, ILLINOIS) AND MWFS-4 (GREEN BAY, WISC), 4TH MAW (USMCR) REDESIGNATIONS FROM — TO 1ST MAW H&HS-1 — MWHS-1 MWCS-1 — MWCS-18 2D MAW H&HS-2 — MWHS-2 MWCS-2 — MWCS-28 3D MAW H&HS-3 — MWHS-3 MWCS-3 — MWCS-38 4TH MAW (USMCR) H&HS-4 (DETROIT, MICH.) — MWHS-4 MWCS-4 (CHICAGO, ILL.) — MWCS-48
9JUL71	CAMPEN, CALIF	3D 8" HOW BTRY, 1ST MARDIV	3D 8" HOW BTRY DEACTIVATED 091500ZJUL71.
15JUL71	EL TORO, CALIF. CAMPEN, CALIF.	MAG-56, 3D MAW	DEACTIVATIONS MAG-56, 3D MAW H&MS-56, MAG-56, 3D MAW MABS-56, MAG-56, 3D MAW REDESIGNATIONS FROM — TO SU 1, H&MS-56, MAG-56 — SU 1, H&MS-16, MAG-16 MATCU-74, H&MS-56, MAG-56 — MATCU-74, H&MS-16, MAG-16 MATCU-75, H&MS-56, MAG-56 — MATCU-75, H&MS-16, MAG-16 HML-267, MAG-56 — HML-267, MAG-16 VMO-2, MAG-56 — VMO-2, MAG-16 HMM-161, MAG-56 — HMM-161, MAG-16 HMM-163, MAG-56 — HMM-163, MAG-16 HMH-361, MAG-56 — HMH-361, MAG-16 HMH-363, MAG-56 — HMH-363, MAG-16
19JUL71	RVN	3D MAB	AT 191630ZJUL71, WITH THE ARRIVAL OF THE FINAL 3D MAB ELEMENTS OF INCREMENT VII (KEYSTONE ORIOLE (ALPHA)) ABOARD THE USS ST. LOUIS (LKA-116) AT LONG BEACH, CALIFORNIA, REDEPLOYMENT OF ALL MAJOR USMC UNITS FROM RVN HAS BEEN COMPLETED.

UNCLASSIFIED

TAB 41-5

Unclassified [redacted]

UNCLASSIFIED

[redacted]

MARINE CORPS COMMAND CENTER 28 JULY 1971

USMC/ENEMY CASUALTIES IN RVN

USMC BATTLE CASUALTIES

KIA/DOW	WIA (EVAC)	WIA (RTD)	MIA/PW
12,922	51,356	37,161	81/23

USMC CASUALTY FIGURES ARE PROVIDED DAILY BY HQMC CASUALTY SECTION (CODE DNA) AND REFLECT ALL CASUALTIES REPORTED AS OF 4JUL71

USMC NON-BATTLE CASUALTIES

DEAD	INJURED	MISSING
1,678	1,935	12

FIGURES INDICATED AS INJURED ARE ONLY THOSE IN SERIOUS/CRITICAL INJURY OR DISEASE CATEGORY AND DO NOT INCLUDE THOSE OF A MINOR NATURE

USMC INFLICTED ENEMY CASUALTIES

KIA	PW	WPNS
86,535	4,098	22,879

TYPICAL DISPOSITION OF 100 USMC WIA

100

- 42 Treated in field & returned to duty
- 58 Admitted to hospital

→ 58

- 9 Treated & returned to duty in SVN
- 49 Evacuated from SVN

→ 49

- 28 Treated in WestPac & returned to duty
- 21 Evacuated to CONUS hospital

→ 21

- 6 Treated & returned to full duty
- 7 Physical disability separation
- 2 Dies of wounds
- 6 Other (long term treatment, etc.)

UNCLASSIFIED

TAB 45-1

[redacted]

Unclassified

UNCLASSIFIED

Department of Defense

NUMBER OF CASUALTIES INCURRED BY U. S. MILITARY PERSONNEL
IN CONNECTION WITH THE CONFLICT IN VIET-NAM

Cumulative from January 1, 1961 through July 17, 1971

28 JULY 1971

	Army	Navy *	Marine Corps	Air Force	Total
A. CASUALTIES RESULTING FROM ACTIONS BY HOSTILE FORCES					
1. Killed	25,075	1,050	11,465	455	38,045
2. Wounded or Injured					
a. Died of wounds	3,483	140	1,449	44	5,116
b. Nonfatal wounds					
Hospital care required	95,746	4,080	51,356	799	151,981
Hospital care not required	103,690	5,831	37,161	2,289	148,971
3. Missing					
a. Died while missing	1,625	182	5	392	2,204
b. Returned to control	48	7	6	26	87
c. Current missing	264	113	81	558	1,016
4. Captured or Interned					
a. Died while captured or interned	15	-	3	1	19
b. Returned to control	56	3	5	6	70
c. Current captured or interned	62	144	23	236	465
5. Deaths					
a. From aircraft accidents/incidents					
Fixed Wing	88	155	139	692	1,074
Helicopter	2,199	62	429	59	2,749
b. From ground action	27,911	1,155	12,354	141	41,561
TOTAL DEATHS a/	30,198	1,372	12,922	892	45,384
B. CASUALTIES NOT THE RESULT OF ACTIONS BY HOSTILE FORCES					
6. Current Missing	132	-	12	-	144
7. Deaths					
a. From aircraft accidents/incidents					
Fixed Wing	246	172	45	277	740
Helicopter	1,696	52	242	18	2,008
b. From other causes	4,666	604	1,391	260	6,921
TOTAL DEATHS	6,608	828	1,678	555	9,669

a/ Sum of lines 1, 2a, 3a and 4a.

*Navy figures include a small number of Coast Guard casualties.

Department of Defense
OASD (Comptroller)
Directorate for Information Operations
July 21, 1971

TAB 45-2

UNCLASSIFIED

Unclassified

UNCLASSIFIED

MARINE CORPS COMMAND CENTER

28 JULY 1971

DISPOSITION AND STRENGTH OF MAJOR US AND FW FORCES IN RVN

DISPOSITION

MR RECAP

MR I*		XXIV CORPS
220 MILES LENGTH@		30-75 MILES WIDTH
14,600 SQ MI AREA		2,860,300 CIV POP
USA	22 BNs	101ST ABN DIV (AM)
ARVN	36 BNs	1STBDE 5TH INF DIV (MECH)
ROKMC	4 BNs	23D INF DIV (AMERICAL)
VNMC	5 BNs	2D ROKMC BDE
ARVN CAV	4 BNs	147TH VNMC BDE
TOTAL	71 BNs	258TH VNMC BDE
		1ST ARVN DIV
		2D ARVN DIV

MR II*		SRAG (NHA TRANG)
315 MILES LENGTH@		45-130 MILES WIDTH
31,300 SQ MI AREA		2,898,200 CIV POP
USA	4 BNs	173D ABN BDE
ARVN	31 BNs	ROK CAP INF DIV
ROK	18 BNs	9TH ROK DIV
ARVN CAV	3	22D ARVN DIV
TOTAL	56 BNs	23D ARVN DIV

MR III*		TRAC (LONG BINH)
90 MILES LENGTH@		55-115 MILES WIDTH
10,100 SQ MI AREA		5,133,000 CIV POP
USA	5 BNs	2D BDE, 25TH INF DIV
ARVN	55 BNs	1ST AUSTRALIAN TF
AUSTRALIA	2 BNs	ROYAL THAI VOL REGT
THAILAND	5 BNs	1ST CAV DIV (AM)
ARVN CAV	5 BNs	5TH ARVN DIV
VNMC	4 BNs	18TH ARVN DIV
		25TH ARVN DIV
TOTAL	76 BNs	369TH VNMC BDE
		1ST ARVN ABN DIV

MR IV*		DRAC (CAN THO)
195 MILES LENGTH@		35-115 MILES WIDTH
14,600 SQ MI AREA		5,700,1000 CIV POP
ARVN	41 BNs	7TH ARVN DIV
ARVN CAV	5 BNs	9TH ARVN DIV
		21ST ARVN DIV
TOTAL	46 BNs	

@ Coastal Arc
# Includes 3 RGR Bns
* See RVN Recap note

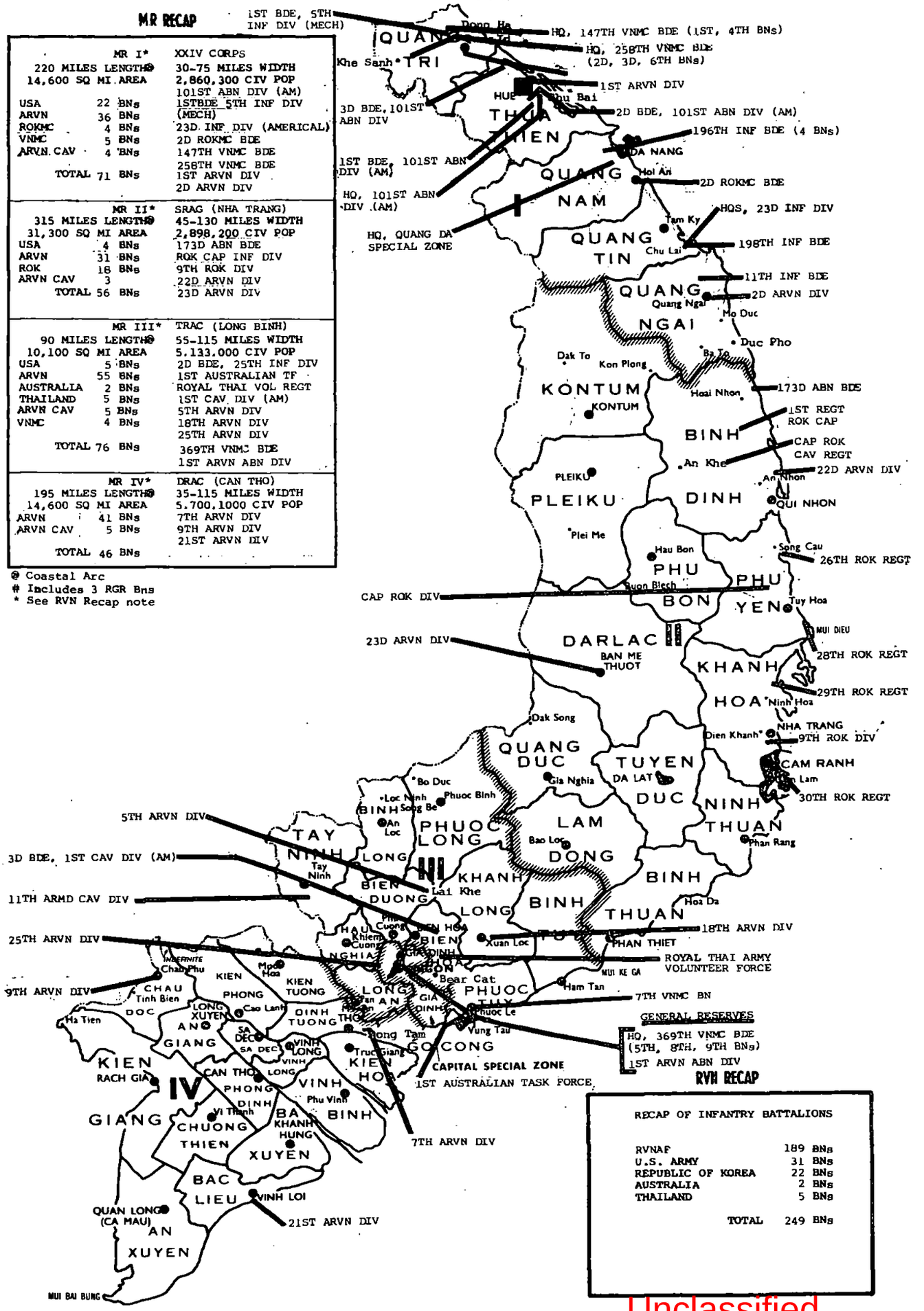

RVN RECAP

RECAP OF INFANTRY BATTALIONS	
RVNAF	189 BNs
U.S. ARMY	31 BNs
REPUBLIC OF KOREA	22 BNs
AUSTRALIA	2 BNs
THAILAND	5 BNs
TOTAL	249 BNs

Unclassified

TAB 46-1

UNCLASSIFIED

UNCLASSIFIED

CONFIDENTIAL

MARINE CORPS COMMAND CENTER

STRENGTHS*

RVN ARMED FORCES (RVNAF) 28 JULY 1971

ARMY (ARVN)	412,705
NAVY (VNN)	41,184
AIR FORCE (VNAF)	50,245
MARINE CORPS (VNMC)	13,806
REGIONAL FORCES (RF)	295,019
POPULAR FORCES (PF)	247,638
TOTAL RVNAF	1,060,597

UNITED STATES FORCES

ARMY	181,757
NAVY	10,519
AIR FORCE	36,336
MARINE CORPS	529
COAST GUARD	102
TOTAL U.S.	229,243

FREE WORLD MILITARY ASSISTANCE FORCES (FWMAF)

REPUBLIC OF KOREA	48,175
AUSTRALIA	6,264
PHILIPPINES	82
THAILAND	10,675
NEW ZEALAND	174
REPUBLIC OF CHINA	31
SPAIN	7
TOTAL FWMAF	65,408

TOTAL FORCES IN RVN 1,355,248

★ SOURCE: RVNAF - MACV MONTHLY RPT OF GVN STRENGTH AS OF 31MAY71.

ALL OTHERS - MACV WEEKLY STRENGTH RPT AS OF 2400, 22JUL71.

Unclassified

UNCLASSIFIED

TAB 46-2

CONFIDENTIAL

UNCLASSIFIED

MARINE CORPS COMMAND CENTER

TABLE OF CONTENTS

4 AUGUST 1971

SECTION I - MARINE CORPS FORCES - WORLD WIDE	LIST OF EFFECTIVE TABS	DATE OF LATEST CHANGE
ALLOCATION OF MARINE CORPS PERSONNEL	11	28JUL71
SELECTED PERSONNEL AND AIRCRAFT DATA	12	4AUG71
UNITED STATES MARINE CORPS RESERVE	13-1	30DEC70
	13-2	23DEC70
	13-3	4AUG71
	13-4	23DEC70
MISCELLANEOUS NON-FMF UNITS	14-1	14JUL71
(MARINE BARRACKS)	14-2	30JUN71
(MARINE SECURITY GUARD BATTALION)	14-3	14APR71
(MARINE DETACHMENTS AFLOAT)	14-4	14APR71
	14-5	30JUN71
SECTION II - STATUS OF FLEET MARINE FORCES		
STATUS OF FMF UNITS	21-1	4AUG71
	21-2	4AUG71
	21-3	28JUL71
	21-4	4AUG71
	21-5	4AUG71
	21-6	4AUG71
	21-7	4AUG71
	21-8	4AUG71
	21-9	4AUG71
RECAPITULATION OF FMF ACTUAL STRENGTHS	22	4AUG71
DISTRIBUTION OF MAJOR GROUND EQUIPMENT AND AIRCRAFT	23	4AUG71
SECTION III - DISPOSITION OF FLEET MARINE FORCE UNITS		
FLEET MARINE FORCE DISPOSITION, DISTRIBUTION BY BATTALION/ SQUADRON AND MOVEMENTS	31-1	4AUG71
	31-2	4AUG71
FMF PACIFIC UNIT LOCATIONS AND STRENGTHS (MIDPAC/EASTPAC)	32	4AUG71
FMF PACIFIC UNIT LOCATIONS, STRENGTHS AND OSD CEILING CONSIDERATIONS (WESTPAC)	33	4AUG71
LANDING FORCES - 7TH FLEET	34 (MISSING)	4AUG71
FMF ATLANTIC UNIT LOCATIONS AND STRENGTHS	35	14JUL71
LANDING FORCES - MEDITERRANEAN AND CARIBBEAN	36-1	14JUL71
GUANTANAMO BAY BATTALION	36-2	14JUL71
SECTION IV - GENERAL		
CHRONOLOGY OF SIGNIFICANT EVENTS	41-1	17MAR71
	41-2	21APR71
	41-3	23JUN71
	41-4	16JUN71
	41-5	28JUL71
STATISTICAL SUMMARY OF III MAF OFFENSIVE OPERATIONS IN VIETNAM	42-1	21APR71
	42-2	18NOV70
	42-3	18NOV70
	42-4	10MAR71
	42-5	12MAY71
	42-6	12MAY71
LANDING FORCES - 7TH FLEET; SUMMARY OF OPERATIONS IN RVN	43-1	18NOV70
	43-2	18NOV70
	43-3	18NOV70
U.S. MARINE CORPS AIRCRAFT LOSSES IN SEASIA	44-1	18NOV70
	44-2	18NOV70
	44-3	18NOV70
	44-4	18NOV70
	44-5	18NOV70
	44-6	18NOV70
	44-7	18NOV70
	44-8	18NOV70
	44-9	25NOV70
	44-10	5MAY71
	44-11	5MAY71
USMC/ENEMY CASUALTIES IN RVN; CUMULATIVE DOD CASUALTY FIGURES ON U.S. MILITARY PERSONNEL AND COMPARATIVE USMC/ENEMY KIA IN CONNECTION WITH THE CONFLICT IN RVN	45-1	28JUL71
	45-2	4AUG71
	45-3	26MAY71
	45-4	4AUG71
DISPOSITION AND STRENGTH OF MAJOR U.S. AND FW FORCES IN RVN	46-1	4AUG71
	46-2	4AUG71
COMUSMACV STAFF, PRINCIPAL MARINE OFFICERS HQ MACV	47	7JUL71
REPUBLIC OF KOREA MARINE CORPS	48-1	21JUL71
REPUBLIC OF VIETNAM MARINE CORPS	48-2	7JUL71
VIETNAM GEOGRAPHIC AND CLIMATE DATA	49-1	18NOV70
	49-2	18NOV70
CHRONOLOGY OF FMF DEPLOYMENT AND STRENGTH IN RVN	410-1	20JAN71
	410-2	25NOV70
	410-3	25NOV70
	410-4	25NOV70
	410-5	25NOV70
	410-6	25NOV70
	410-7	9DEC70
	410-8	10MAR71
	410-9	19MAY71
	410-10	23JUN71
	410-11	21JUL71
	410-12	21JUL71

Unclassified

CONTENTS OF THIS PUBLICATION
DOWNGRADED AT 3 YEAR
INTERVALS
DECLASSIFIED AFTER 12 YEARS
DOD DIR 5200.10

UNCLASSIFIED

MARINE CORPS
AUG 4 1971
REFERENCE BRANCH

Unclassified

[redacted]

UNCLASSIFIED

MARINE CORPS COMMAND CENTER

SELECTED PERSONNEL AND AIRCRAFT DATA

PERSONNEL

4 AUGUST 1971

	STRENGTH	PERCENT USMC	PERCENT FMF	PERCENT FMFPAC
USMC TOTAL *	212,339	100.00		
FLEET MARINE FORCES	99,373	46.71	100.00	
FMF ATLANTIC #	38,863	18.30	39.11	
FMF PACIFIC #	60,416	28.41	60.89	
VIETNAM	569 ¢	00.27		

SOURCE: * HQMC 1018-20 (ESTIMATED PERSONNEL DATA) AS OF 29JUN71.
MARES FORSTAT REPORT DATED 7JUL71.
¢ MACV WEEKLY STRENGTH REPORT AS OF 29JUL71.

AIRCRAFT

21 JULY 1971

	FIXW	HELO	TOTAL	PERCENT USMC	PERCENT FMF	PERCENT FMFPAC
USMC TOTALS **	975	616	1,591	100.00		
FLEET MARINE FORCES @	692	579	1,271	79.89	100.00	
FMF ATLANTIC @	311	278	589	37.02	46.34	
FMF PACIFIC @	381	301	682	42.87	53.66	

SOURCE: ** DC/S AIR STATUS BOARD PHOTO AS OF 26MAR71.
@ MARES FORSTAT REPORT DATED 7JUL71.

UNCLASSIFIED

Unclassified

[redacted]

TAB 12

[redacted]LASSIFIED

MARINE CORPS COMMAND CENTER

IV MARINE AMPHIBIOUS FORCE

4 AUG 1971

UNIT	NOTE	LOCATION	AUTHORIZED STRENGTH		ACTUAL STRENGTH				SHORTAGE		REPORT	REPORT
					CL II(3)		CL III					
			OFF	ENL	OFF	ENL	OFF	ENL	OFF	ENL	TO	BY
4TH MARINE AIRCRAFT WING		GLENVIEW, ILL.	84	181	75	174	4	7	5	0	EL TORO	M+2
MWHS-4		DETROIT, MICH.	23	162	20	151	1	11	2	0	EL TORO	M+2
MWTS-4		GREEN BAY, WISC.	6	184	6	177	0	0	0	0		M+2
MACG-48			167	1059	146	862	16	197	5	0	EL TORO	
HeMS-48		GLENVIEW, ILL.	48	265	38	186	6	79	4	0		M+25
MASS-4		EL TORO, CALIF.	35	161	33	139	2	22	0	0		M+27
MACS-17		WILLOW GROVE, PA.	28	211	24	171	4	40	0	0		M+28
MACS-23		DENVER, COLO.	28	211	26	178	1	33	1	0		M+29
MACS-24		ANDREWS AFB, MD.	28	211	25	188	3	23	0	0		M+30
MACS-48		CHICAGO, ILL.	12	218	10	165	2	53	0	0		M+2
MWSG-47			56	802	40	587	10	214	6	1	EL TORO	
HeMS-47		MINNEAPOLIS/ST. PAUL, MINN.	45	570	31	390	8	179	6	1		M+20
WERS-47		WYOMING, PA.	11	232	9	197	2	35	0	0		M+20
MAG-41			161	1375	146	1130	6	240	9	5	EL TORO	
HeMS-41		DALLAS, TEXAS	38	294	33	238	2	56	3	0		M+12
MABS-41		MEMPHIS, TENN.	20	432	14	323	1	109	5	0		M+12
VMF-112		DALLAS, TEXAS	32	196	31	180	0	16	1	0		M+17
VMF-321		ANDREWS AFB, MD.	32	196	32	181	0	15	0	0		M+18
VMF-351		ATLANTA, GA.	32	196	30	181	2	15	0	0		M+19
MATCU-71		MEMPHIS, TENN.	7	61	6	27	1	29	0	5		M+15
MAG-42			188	1444	174	1113	3	325	11	6	EL TORO	
HeMS-42		ALAMEDA, CALIF.	38	294	33	227	2	67	3	0		M+9
MABS-42		ALAMEDA, CALIF.	20	432	16	320	1	112	3	0		M+9
VMA-142		JACKSONVILLE, FLA.	41	219	38	155	0	64	3	0		M+15
VMA-133		ALAMEDA, CALIF.	41	219	39	190	0	29	2	0		M+16
VMA-134		LOS ALAMITOS, CLAIF.	41	219	41	182	0	37	0	0		M+17
MATCU-72		OLATHE, KAN.	7	61	7	39	0	16	0	6		M+16
MAG-43			179	1421	165	1173	7	241	7	7	EL TORO	
HeMS-43		WILLOW GROVE, PA.	38	294	33	266	2	28	3	0		M+15
MABS-43		WILLOW GROVE, PA.	20	432	16	335	1	97	3	0		M+15
VMF-511		WILLOW GROVE, PA.	32	196	28	176	3	20	1	0		M+20
VMA-131		WILLOW GROVE, PA.	41	219	41	197	0	22	0	0		M+21
VMA-322		S. WEYMOUTH, MASS.	41	219	40	167	1	52	0	0		M+22
MATCU-73		WILLOW GROVE, PA.	7	61	7	32	0	22	0	7		M+18
MAG-46			405	2425	386	2083	10	335	9	7	SANTA ANA	
HeMS-46		SANTA ANA, CALIF.	39	302	33	250	2	52	4	0		M+10
MABS-46		EL TORO, CALIF.	30	611	23	465	3	146	4	0		M+5
HMM-764		SANTA ANA, CALIF.	59	253	57	231	1	22	1	0		M+10
HMM-768		LAKEHURST, N.J.	59	253	59	234	0	19	0	0		M+12
HMM-772		LAKEHURST, N. J.	59	253	59	235	0	18	0	0		M+12
HMA-773		SANTA ANA, CALIF.	12	60								
HMM-776		GLENVIEW, ILL.	59	253	59	221	0	32	0	0		M+12
HMM-777		DALLAS, TEXAS	59	253	58	234	1	19	0	0		M+10
VMO-4		DETROIT, MICH.	34	186	33	177	1	9	0	0		M+10
MATCU-76		S. WEYMOUTH, MASS.	7	61	5	36	2	18	0	7		M+10
VMJ-4		DALLAS, TEXAS	22	119	18	104	2	15	2	0	EL TORO	M+20
VMR-234		GLENVIEW, ILL.	49	242	31	199	7	43	11	0		M+10

TAB 13-3

Unclassified

[redacted]UNCLASSIFIED

[redacted]

UNCLASSIFIED

MARINE CORPS COMMAND CENTER

STATUS OF FMF UNITS**

4 AUGUST 1971

UNIT *	NOTE	UNIT COMMANDER	LOCATION	STRENGTH USMC	STRENGTH USN	UNIT READINESS ☆ CURRENT RATE	RSN	P	S	R	T	EXPECTED RATE	BY	MAJOR EQUIPMENT
FMF				99279	2828									
MIDPAC				5682	758									
FMFPAC		LTGEN W. K. JONES	HAWAII	60416	1784	C1		1	1	1	1			
HQ FMFPAC				1043	36									
H&SBN		COL R. G. LAUFFER	CP SMITH	980	27	C1		1	1	1	1			
DET 2, 21ST DENTAL CO (-)		CAPT M. R. HAMILTON(USN)			9	C1		1	1	1	1			
HQ SQDN		LTCOL C. E. DORFFELD	KANEOHE	63		C4	P	4	1	1	1	C4	710731	5/T-28B, 2/UH-34D, 1/US-2B 1/VH-34D
1ST ANGLICO (-)		MAJ J. B. LEONARD	SDIEGO	153	3	C4	S	2	4	2	1	C3	710601	
SU 1, 1ST ANGLICO (MACV)	*	LTCOL E. E. SHOULTS	SAIGON	168	10	C1		1	1	1	1			
1ST RADIO BN		LTCOL E. D. RESNIK	KANEOHE	422		C1		1	1	1	1			
1ST MARINE BRIGADE		BGEN V. A. ARMSTRONG	KANEOHE	3896	109	C4	P	4	3	3	3	C3	711031	
H&S CO		CAPT H. J. TRAUTWEIN, JR.		251	14	C1		1	1	1	1			
1ST ITT		CAPT T. E. NADOLSKI		14		C1		1	1	1	1			
11TH CIT (CADRE) (FMFPAC)	*	CAPT K. W. CLEM				C4	N	5	5	5	5			
DET 1, 21ST DENTAL CO (-)		CDR J. D. CRAWFORD(USN)		15		C1		1	1	1	1			
3D MARINES (-) (REIN)		LTCOL K. L. CHRISTENSEN	KANEOHE			C4	P	4	4	4	4	C3	711030	
HQCO (-)		CAPT C. S. CERTAIN		182	19	C4	P	4	4	4	4	C3	710930	
1ST BN		MAJ P. J. KIESELBACH		963	51	C4	P	4	1	1	4	C4	710801	6/105 HOW TD, 8/106MM RR, 8/81 MORT
2D BN		MAJ F. W. BEEKMAN		118		C4	P	4	3	3	4	C3	711231	8/106MM RR, 8/81 MORT
CO A, 3D ENGR BN (-)		CAPT R. I. EDWARDS		107		C3	P	3	3	3	2	C2	711201	
CO A (REIN), 3D MT BN (-)		CAPT R. E. MANUEL		16		C4	P	4	2	2	4	C3	711215	
CO A (REIN), 3D SP BN (-) (CADRE)						C4	P	4	2	3	4	C3	711130	
CO A, 3D RECON BN (-) (REIN) (CADRE)						C4	P	4	4	4	4	C3	711031	
CO A (REIN), 3D MED BN (-) (CADRE)														
1ST BN (-), 12TH MAR		MAJ L. E. KOLEBER	KANEOHE			C4	P	4	2	3	4	C3	711031	12/105 HOW TD
CO D, 3D AMTRAC BN (-)		CAPT K. R. BURNS		144		C4	P	4	1	1	4	C3	710930	3/LVTP-5 COMD, 44/LVTP-5, 1/LVTR
COMM SPT CO, 7TH COMM BN(-)		MAJ R. T. HIMMERICH												
PROV SERV BN		MAJ R. E. LANGTON		211		C4	P	4	4	4	4	C3	710930	
MAG-24		COL R. E. CAREY	KANEOHE	1875	25	C3	X	4	2	3	4	C3	710915	
H&MS-24		LTCOL C. L. PHILLIPS		448		C3	S	2	3	3	2	C2	710901	1/C-117D, 5/CH-46A, 2/TA-4F
MABS-24		LTCOL W. R. LEDBETTER		343	25	C4	P	4	2	2	2	C3	710915	
MATCU-70		WO O. F. GOUR, JR.		38		C4	P	4	2	1	4	C3	710801	
VMFA-122		LTCOL L. FURSTENBERG		166		C4	P	4	1	4	4	C3	710901	8/F-4B
VMFA-212		LTCOL R. D. REVIE		209		C3	X	4	1	3	3	C2	710704	12/F-4J
VMFA-235		LTCOL F.L. FARRELL, JR.		227		C3	X	4	1	1	4	C2	710630	16/F-4J
MACS-2		LTCOL P. L. ELLIOTT		174		C4	R	4	3	4	3	C3	710801	
HMM-262		LTCOL F. K. WEST, JR.		159		C4	P	4	1	4	4	C3	710930	30/CH-46D
HMH-463		MAJ M. E. EDWARDS		111		C4	P	4	4	4	4	C4	710825	18/CH-53D
DET, VMO-6 (-)														6/OV-10A
DET, HML-367 (-)														8/UH-1E
WESTPAC				26522	772									
FMFPAC														
III MAF		LTGEN D. J. ROBERTSON	CP COURTNEY	26522	772									
H&S CO				131		C1		1	1	1	1			
3D MARDIV(-)(REIN) (III MAF)	*	MAJGEN L. METZGER	CP COURTNEY	14460	583	C2	T	1	1	1	2	C1	710705	
HQBN		COL H.A.F. VONDERHEYDE, JR.		1552	41	C2	X	1	1	2	2	C2	720601	
3D ITT	22	CAPT M. R. LAMB												
11TH ITT	22	CAPT C. K. ABLES												
15TH ITT	22	CAPT E. R. KRAMER	CP HANSEN											
17TH ITT	22	CAPT G. H. JOHNSON, JR.												
SCAMP	22													
3D CIT		CAPT R. E. SHROYER		14		C1		1	1	1	1			
1ST SSCT		CAPT T. L. STROHECKER		8		C3	S	1	3	1	1	C1	710805	
3D DENTAL CO		CAPT W. J. KENNEDY(USN)		4	66	C1		1	1	1	1			

Unclassified

* PARENTHETIC UNIT INDICATES OPCON WHEN DIFFERENT FROM ORGANIZATIONAL STRUCTURE.

TAB 21-1

UNCLASSIFIED

[redacted]

[redacted] UNCLASSIFIED

MARINE CORPS COMMAND CENTER

STATUS OF FMF UNITS**

4 AUGUST 1971

UNIT *	NOTE	UNIT COMMANDER	LOCATION	STRENGTH USMC	STRENGTH USN	UNIT READINESS ☆ CURRENT RATE	RSN	P	S	R	T	EXPECTED RATE	BY	MAJOR EQUIPMENT
4TH MARINES	24	COL R. T. HANIPAN JR.	CP HANSEN			C2	T	2	1	1	2	C2	720601	
HQCO		MAJ R. F. LUSK		219	6	C2	T	1	1	2	2	C2	710601	
1STBN	1	LTCOL D. G. ROBISON		978	46	C2	P	2	1	1	2	C1	710825	8/106MM RR, 8/81 MORT
2DBN		LTCOL W. H. NULTY		1011	35	C2	P	2	1	2	2	C1	710930	8/106MM RR, 8/81 MORT
3DBN		LTCOL A. J. CASTELLANA		1043	38	C2	P	2	1	1	2	C1	710930	8/106MM RR, 8/81 MORT
9TH MARINES		COL J. V. MCLERNAN	CP SCHWAB			C2	T	1	1	1	2	C2	710805	
HQCO		CAPT M. H. CRAFTON, JR.		222	5	C2	R	1	1	2	2	C1	710930	
1STBN		LTCOL F.W.N.WOODROW,JR.		992	36	C1		1	1	1	1			8/106MM RR, 8/81 MORT
2DBN (31ST MAU)	2*	LTCOL F. J. JOHNSON,JR.	31ST MAU	1039	34	C2	T	1	1	1	2	C1	710707	8/106MM RR, 8/81 MORT
3DBN		LTCOL B. S. SNELL	CP SCHWAB	1041	40	C2	P	2	1	1	2	C1	711105	8/106MM RR, 8/81 MORT
12TH MARINES (-)		COL J. P. O'CONNELL	CP HANSEN			C2	T	1	1	1	2	C1	710825	
HQ BTRY (-)		CAPT D. J. LABOISSIERE		229	6	C2	T	1	1	2	2	C1	710825	
2DBN	7	MAJ R. S. VARNEY		534	14	C2	T	1	1	1	2	C2	710605	36/105 HOW TD
3DBN		LTCOL W. J. HALLISEY		508	15	C2	T	1	1	1	2	C1	710705	24/105 HOW TD
4THBN (-) (REIN)		LTCOL K. G. PATTERSON		504	11	C2	P	2	1	2	2	C2	710830	1/M51 VTR, 17/155 HOW SP
3D PLAT, 1ST 8" HOW BTRY	4													2/8" HOW SP
3D SERV BN (-)		COL D. J. HUNTER	CP HANSEN	769	27	C2	T	1	1	1	2	C1	710825	
3D TANK BN (-)	7	LTCOL C. R. STIFFLER		624	13	C2	X	1	1	1	2	C2	720601	58/M48 TANK, 5/M51 VTR 8/M67 TANK
9TH MT BN (-)		MAJ J. R. TRAYLOR		318	7	C2	X	1	1	1	1	C1	710805	
3D MED BN (-)		LTCOL F. E. CLARK, JR.		142	39	C1	S	3	3	3	2	C2	710911	
1ST HOSPITAL CO (CADRE)		LTJG H.D. CASH (USN)	CP SCHWAB	28	16	C4	P	4	1	2	4	C4	711231	
3D MT BN (-)		MAJ B. L. PARKS		190	7	C1		1	1	1	1			
3D RECON BN (-)	7	LTCOL T. R. STUART		347	25	C2	P	2	1	1	2	C1	710706	
3D ENGR BN (-) (REIN)	17	LTCOL C. R. GIBSON		709	8	C2	T	2	1	2	2	C1	720630	
CO D (REIN),7TH ENGR BN(-)		MAJ D. R. COMER	CP HAGUE					5	5	5	5			
BRIDGE PLAT, 1ST BRIDGE CO								5	5	5	5			
7TH COMM BN (-)		LTCOL M. M. MCCOURY	CP SCHWAB	486	7	C2	X	2	1	2	1	C2	720601	
3D SP BN (-)		LTCOL R. L. ANDERTON	CP HAGUE	365	29	C2	X	1	1	2	2	C2	720601	
1ST AMTRAC BN (-)		LTCOL J. G. BUCKMAN	CP SCHWAB	584	12	C2	P	2	2	2	2	C1	710805	5/LVTE-1, 10/LVTP-5 CMD, 97/ LVTP-5, 3/LVTR
1ST MAW (III MAF)	*	MAJGEN R. G. OWENS,JR.	IWAKUNI	8851	139	C2	R	2	2	2	2	C2	711001	
JAPAN (1ST MAW ELEMENTS)				5830	107									
MWHS-1		COL W. C. KELLY	IWAKUNI	819	22	C2	S	2	2	2	1	C2	710601	
7TH CIT (1ST MAW)	*	WO J. A. CANONICO		20		C1		1	1	1	1			
11TH FORCE DENTAL CO (-)		CDR J. J. LYONS (USN)		2	32	C1		1	1	1	1			
3D SSCT		CAPT G. G. MEYERS		12		C2	X	1	1	1	1	C1	710801	
MACG-18 (-)		LTCOL F. L. DELANEY	IWAKUNI			C3	T	2	1	2	3	C2	710524	
H&HS-18 (-)		MAJ L. E. OBENHAUS		231		C2	R	2	2	2	2	C1	710901	
MASS-2 (-)		LTCOL T. G. DAVIS		177		C3	R	1	2	3	2	C2	710615	
MWCS-18		MAJ R. S. KAYE		204		C2	P	2	1	1	1	C1	710620	
MAG-12		COL E. J. RUTTY	IWAKUNI			C2	R	2	2	2	2	C1	710701	
H&MS-12		MAJ D. E. DONOVAN		557		C3	R	1	2	3	2	C2	710901	6/TA-4F
MABS-12		LTCOL J. L. DRIEFER		377	20	C2	R	2	1	2	2	C2	710930	
MATCU-62 (MAG-12)	*	CAPT A. E. PETERS		39		C4	P	4	1	2	1	C3	710901	
VMA-211		LTCOL D. G. GASCOIGNE		209	2	C2	R	2	2	2	2	C1	710915	17/A-4E
VMA-311		LTCOL K. L. BATT		186	1	C2	P	2	2	2	1	C2	711002	24/A-4E
VMA (AW)-533		LTCOL R. P SPRIER		245		C2	R	2	1	2	1	C2	711001	12/A-6A
OTHER														
SU 2, H&MS-36			FUJI											

Unclassified

* PARENTHETIC UNIT INDICATES OPCON WHEN DIFFERENT FROM ORGANIZATIONAL STRUCTURE.

TAB 21-2

UNCLASSIFIED [redacted]

UNCLASSIFIED
SECRET

MARINE CORPS COMMAND CENTER

STATUS OF FMF UNITS**

4 AUGUST 1971

UNIT *	NOTE	UNIT COMMANDER	LOCATION	STRENGTH USMC	STRENGTH USN	UNIT READINESS☆ CURRENT RATE	RSN	P	S	R	T	EXPECTED RATE	EXPECTED BY	MAJOR EQUIPMENT
3D BN, 3D MARINES (CADRE)		MAJ D. J. O'CONNOR	CAMPEN	112	2	C4	N	5	4	4	5			7/106MM RR
5TH MARINES		LTCOL R. R. BURRITT	CAMPEN			C4	P	4	4	4	4	C4	711001	
HQCO		CAPT J. R. WILLIAMS		88	10	C4	P	4	4	3	4	C4	711001	
1ST BN		MAJ W. T. MACY		132	6	C4	N	4	4	4	4	C4	711001	1/106MM RR, 6/81 MORT
2D BN		MAJ J. A. LINNEMANN		120	4	C4	P	4	4	4	4	C4	711001	
3D BN		CAPT M. B. DARLING		139	7	C4	P	4	4	4	4	C4	711001	8/106MM RR, 8/81 MORT
7TH MARINES		COL A. A. MONTI	CAMPEN			C3	P	3	2	2	3	C3	710901	
HQCO		CAPT W. O. MOORE, JR.		220	8	C2	R	1	2	2	1	C1	710901	
1ST BN (CADRE)		MAJ R. C. HALL		409	7	C4	N	5	4	4	5			8/106MM RR, 8/81 MORT
2D BN		LTCOL T. L. SULLIVAN		1134	44	C2	T	1	1	1	2	C1	710801	8/106MM RR, 7/81 MORT
3D BN	13	LTCOL R. J. MILLE		1104	41	C2	T	1	1	1	2	C1	710901	8/106MM RR, 8/81 MORT
11TH MARINES (-)(REIN)		COL W. R. GRUBAUCH	CAMPEN			C4	P	4	3	4	4	C4	711001	
HQ BTRY		1STLT W. T. WILLIAMS		163		C4	P	4	4	4	4	C4	711001	
1ST BN		MAJ H. B. BROOKS III		627	1	C4	P	4	2	4	4	C4	711001	6/M-30 MORT, 12/105 HOW TD, 4/155 HOW TD, 1/81 MORT
2D BN (CADRE)		CAPT R. D. FULCHER		217	2	C4	N	4	4	4	4	C4	711001	
3D BN		MAJ W. A. HALL		657	18	C2	T	1	1	1	2	C1	711001	18/105 HOW TD
1ST MP BN		MAJ W. J. MC CALLUM	CAMPEN	45		C4	N	5	5	5	5			3/81 MORT
1ST MT BN (REIN)		CAPT E. R. WHITING		306	6	C3	R	1	2	3	2	C2	711001	
CO B, 9TH MT BN (-)		CAPT R. F. WILLIAMS		77	1	C2	X	3	1	1	3	C3	710801	
1ST RECON BN		MAJ H. C. COOPER, JR.		267	5	C4	N	4	2	3	4	C4	711001	
1ST FORCE RECON CO		CAPT D. L. COOK		71	3	C4	P	4	2	3	4	C4	711001	
1ST TANK BN (REIN)	18	MAJ G. E. BERBAUM		417	21	C4	P	4	2	2	4	C4	711001	5/M-51 VTR, 7/M-67 TANK, 15/M103 TANK, 25/M48 TANK
CO D, 3D TANK BN (-) (CADRE)														
1ST ENGR BN	26	MAJ H. L. SOLTER, JR.		480	5	C4	N	4	4	4	4	C4	711001	
7TH ENGR BN (-)(REIN)	11	MAJ C. N. WALL		382	14	C4	P	4	2	3	4	C4	711001	
1ST BRIDGE CO (-)(CADRE)		1STLT D. N. TAYLOR, JR.		52		C4	P	4	1	4	4	C4	711001	
1ST SP BN	8	LTCOL T. F. GRAY		247	17	C4	P	4	1	1	4	C4	711001	
3D AMTRAC BN (-)	19	MAJ J. P. SENIK		368	17	C4	P	4	2	2	4	C4	711001	5/LVTE-1, 8/LVTP-5 COMD, 70/LVTP-5, 3/LVTR
1ST SERV BN (REIN)	10	COL G. K. REID		732	33	C4	P	4	2	2	4	C4	710901	
1ST SEARCHLIGHT BTRY (CADRE)								5	5	5	5			
7TH SEP BULK FUEL CO(CADRE)								5	5	5	5			
1ST MED BN (-)		CDR D.K. LIVINGTON(USN)		44	82	C4	P	4	4	3	4	C4	711001	
1ST DENTAL CO		CAPT J. F. KING (USN)		3	42	C4	R	4	3	4	4	C3	711001	
								5	5	5	5			
FORCE TROOPS FMFPAC		BGEN P. G. GRAHAM	29 PALMS	1495	75	C4	X	4	2	3	3			
HQCO		MAJ E. L. ROTTSOLK		173	9	C1		1	1	1	1			
NOP, 1ST FSR		CAPT T. R. GERIES		49		C1		1	1	1	1			
9TH COMM BN (-)		LTCOL D. J. GARRET		376	12	C4	P	4	2	2	3	C3	710901	
13TH CIT (FORTRPSPAC)	*	CAPT A. G. WILSON		16		C1		1	1	1	1			
21ST DENTAL CO (-)		CAPT G. W. WALTER (USN)		2	21	C4	S	1	4	4	1	C3	711001	
1ST FAG		LTCOL R. O. GILLICK	29 PALMS	19		C4	P	4	2	3	4	C3	710802	
HQ BTRY, 1ST FAG		1STLT G. R. MARRY		132	13	C2	T	1	1	1	2	C1	710802	
1ST 8" HOW BTRY SP (-)		CAPT J. P. FARRELL		136		C3	P	3	2	3	3	C2	710901	1/M-51 VTR, 4/8" HOW SP
1ST 175MM GUN BTRY SP		CAPT M. T. OWENS, JR.		65		C4	P	4	2	4	4	C3	710802	1/M-51 VTR, 6/175 GUN SP
3D 175MM GUN BTRY SP		CAPT D. L. ROSENBERG		94		C4	P	4	3	4	4	C3	710802	1/M-51 VTR, 6/175 GUN SP
4TH BN, 11TH MAR (1ST FAG)	*	LTCOL D. W. SANFORD		304	2	C4	R	4	3	4	4	C3	710802	1/M-51 VTR, 26/155 HOW SP
CO A (REIN), 7TH ENGR BN(-)		CAPT P. A. PANKEY	29 PALMS	107		C4	P	4	1	2	3	C3	710802	
3D HOSPITAL CO (CADRE)		LT W. L. NICHOLS (USN)		22	18	C4	X	4	4	3	4			

* PARENTHETIC UNIT INDICATES OPCON WHEN DIFFERENT FROM ORGANIZATIONAL STRUCTURE.

TAB 21-4

Unclassified
UNCLASSIFIED

UNCLASSIFIED

[redacted]

MARINE CORPS COMMAND CENTER

STATUS OF FMF UNITS**

4 AUGUST 1971

UNIT*	NOTE	UNIT COMMANDER	LOCATION	STRENGTH USMC	STRENGTH USN	UNIT READINESS☆ CURRENT RATE	RSN	P	S	R	T	EXPECTED RATE	BY	MAJOR EQUIPMENT
3D MAW		BGEN L. E. BROWN	EL TORO	10888	220	C3	T	3	2	3	3	C2	711030	
MWHS-3		LTCOL H. E. SEXTON		663	122	C2	P	2	2	2	2	C1	710930	
6TH CIT		CAPT M. C. HOWEY		14		C1		1	1	1	1			
4TH SSCT		CAPT H. G. WHITE		9		C1		1	1	1	1			
13TH FORCE DENTAL CO		CAPT J. R. EUBANK (USN)	EL TORO		40	C4	P	4	1	1	1	C3	710915	
MWSG-37		LTCOL F. R. SMOKE	EL TORO			C3	X	4	3	3	3	C2	711001	
H&MS-37 (-)		MAJ L. K. WARN		507	1	C3	P	3	2	2	2	C1	711001	4/C-117D, 2/C-54P/Q
SU 1, H&MS-37 (-)		MAJ L. C. WALLACE, JR.		51		C2	P	2	1	1	1	C1	711001	
WERS-37		LTCOL M. PALLAI		213		C3	P	3	2	2	2	C2	711030	
VMGR-352 (3D MAW)	*	LTCOL G. L. CARLSON		251	1	C3	X	4	2	2	4	C2	711001	10/KC-130F
MACG-38		COL J. W. DRURY	EL TORO			C2	S	2	2	2	2	C1	711030	
H&HS-38		MAJ D. E. T. WILSON		377		C2	R	1	2	2	2	C1	710930	
1ST REDEYE PLAT		1STLT K. E. ROWE		38		C2	R	2	1	2	1	C1	710801	
3D REDEYE PLAT		1STLT J. B. DOWLING		34		C2	R	2	1	2	1	C1	710701	
2D LAAM BN		LTCOL R. D. FOSTER	YUMA	641	5	C2	X	3	1	2	2	C1	710801	
MACS-7		LTCOL J. O. GREGERSON	CAMPEN	186	2	C2	P	2	2	2	2	C1	710901	
MACS-1 (-)		MAJ W. H. ALLEN	YUMA	198	2	C3	T	2	2	2	3	C2	710901	
SU 1, MACS-1 (-) (NWU)		CAPT H. POSTHUMA		65		C1		1	1	1	1			
MWCS-38		MAJ W. T. CHWATEK	EL TORO	174		C2	R	1	1	2	1	C1	710930	
MASS-3		MAJ V. J. FULLADOSA		103		C4	P	4	1	1	2	C1	710801	
MAG-11		COL L. J. STIEN	EL TORO			C4	P	4	4	4	4	C3	710730	
H&MS-11		LTCOL N. N. LEVIN		356	1	C4	P	4	4	4	4	C3	710730	2/C117D, 4/OV-10A, 3/TA-4F
MABS-11		LTCOL C. L. COMFORT		373	16	C4	P	4	4	4	4	C3	710730	
VMFA-314		MAJ A. J. BARTEL		36		C4	N	5	4	4	5			
VMFA-323		MAJ T. G. LEACH		200		C4	P	4	2	4	4	C3	710930	14/F-4B
VMFA-334		MAJ G. PSAROS				C4	N	4	4	4	4			
VMFA-531		LTCOL R. HUTCHINSON		240		C2	X	3	2	1	3	C2	710930	14/F-4B
MAG-13		COL D. R. DAVIS	EL TORO			C4	P	4	3	4	4	C3	710930	
H&MS-13		LTCOL C. C. NEWMARK		692	1	C2	P	2	1	1	2	C1	710930	13/A-6A, 8/F-4B, 5/TA-4F
MABS-13		MAJ J. DERMODY		510	2	C2	P	2	2	1	1	C2	710930	
MATCU-65 (MAG-13)	*	CAPT D. M. TARBET	YUMA	65		C4	P	4	1	1	4	C3	710930	
MATCU-67 (MAG-13)	*	1STLT J. HANCOCK	EL TORO	22		C4	P	4	1	4	4	C3	710930	
MATCU-77 (CAIRE)(MAG-13)	*							5	5	5	5			
VMA-214		LTCOL J. J. MCCARTHY		177		C2	X	3	2	2	3	C2	711030	16/A-4F
VMA-223		MAJ A. OSEGUERA		161	1	C4	P	4	2	3	3	C3	710930	6/A-4F
VMA(AW)-225		LTCOL J.A. MANZIONE, JR.		51		C4	N	5	4	4	5			
VMA(AW)-242		LTCOL M. S. NEWHILL		154	1	C4	S	4	4	4	4	C3	710713	7/A-6A
VMCJ-3		LTCOL N. W. DINHAGE		297	1	C4	P	4	1	2	3	C3	710930	10/RF-4B, 2/EA-6A
MAG-16		COL G. L. LILLICH	SANTA ANA			C3	P	3	2	2	2	C2	710930	
H&MS-16 (-)		MAJ J. G. MILLS		377		C2	P	2	2	2	2	C2	710930	5/CH-46D, 13/CH-53A, 6/UH-1E, 12/OV-10A
SU 1, H&MS-16 (-)		MAJ G. W. LEE	CAMPEN	131		C1		1	1	1	1			
MABS-16		MAJ B. G. WILKISON	SANTA ANA	416		C4	P	4	2	2	2	C3	710930	
MATCU-74 (H&MS-16 (-))	*	CAPT G. N. BROWN		47		C4	P	4	1	1	2	C3	710801	
MATCU-75 (H&MS-16 (-))	*	CAPT P. D. HAYNES	CAMPEN	30		C4	P	4	2	2	3	C3	710930	
HML-267		LTCOL J. M. MORIARTY		326	10	C3	R	2	1	3	2	C2	710930	22/UH-1E, 10/OV-10A
VMO-2		MAJ D. A. CAYLOR		46	1	C4	N	4	4	4	4			
HMM-161		LTCOL G. H. DUNN	SANTA ANA	187		C3	P	3	3	2	2	C2	710930	16/CH-46D
HMM-163		LTCOL F. A. MATHEWS		198	1	C2	P	2	1	1	1	C1	710930	21/CH-46F
HMH-361		MAJ R. F. CAPTOR		149		C4	P	4	3	4	4	C3	710930	10/CH-53A
HMH-363		LTCOL A. F. RIBBECK		180		C2	X	3	3	2	2	C2	710930	14/CH-53A

* PARENTHETIC UNIT INDICATES OPCON WHEN DIFFERENT FROM ORGANIZATIONAL STRUCTURE.

TAB 21-5

Unclassified

UNCLASSIFIED [redacted]

[redacted] UNCLASSIFIED

MARINE CORPS COMMAND CENTER

STATUS OF FMF UNITS**

4 AUGUST 1971

UNIT *	NOTE	UNIT COMMANDER	LOCATION	STRENGTH USMC	STRENGTH USN	UNIT READINESS☆ CURRENT RATE	RSN	P	S	R	T	EXPECTED RATE	EXPECTED BY	MAJOR EQUIPMENT
MHTG-30		COL R. BIANCHI	SANTA ANA			C2	R	1	1	2	1	C1	710901	
H&MS-30		MAJ D. G. DUNLAP		290	1	C1		1	1	1	1			5/CH-46F, 3/CH-53A
HMHT-301		MAJ D. A. DALRYMPLE		171		C2	P	2	2	1	1	C1	710901	8/CH-53A
HMMT-302		LTCOL R. G. RITCHIE		188		C1		1	1	1	1			16/CH-46F
MCCRTG-10		COL R. B. SINCLAIR	YUMA			C2	S	1	2	2	1	C2	710630	
H&MS-10		MAJ G. R. CALLISON		424	6	C1		1	1	1	1			
VMFAT-101		LTCOL T. R. MOORE		375	4	C3	R	1	3	3	1	C2	711030	22/F-4B
VMAT-102		LTCOL R. D. REID		281		C2	S	2	2	2	1	C1	711001	26/A-4E
VMT-103		MAJ B. H. FREEMAN		212	3	C2	R	1	2	2	1	C1	710930	16/TA-4F, 2/TA-4J
1ST FSR		COL H. C. REED	CAMPEN	1564	44	C3	P	3	2	2	3	C2	711001	2/106MM RR, 1/155 HOW TD
H&SBN		MAJ R. E. JOHNSON		408	23	C3	P	3	2	2	3	C2	711001	
SUPPLY BN		LTCOL E. R. PUCKETT		633	21	C3	P	3	2	2	3	C2	711001	
MAINT BN		LTCOL E. E. CREWS		523		C3	P	3	2	2	3	C2	711001	
EAST COAST:														
FMFLANT:		LTGEN E. E. ANDERSON	NORFOLK	38863	1044	C1		1	1	1	1			
HQ FMFLANT:				805	4									
H&SBN		COL L. H. DEVINE		726	4	C2	P	2	1	1	2	C1	710601	
HQ SQDN		LTCOL D. PRUDHOMME		79		C4	N	5	5	5	5			
2D MAR DIV		BGEN R. D. BOHN	CAMLEJ	16407	650	C2	P	2	1	1	2	C3	710930	
HQBN		COL G. R. HERSHEY		1892	39	C2	R	1	1	2	1	C1	710830	
2D ITT	20	MSGT R. L. GONYO												
4TH ITT	20	WO G. L. ANDERSON												
6TH ITT	20	2DLT R. L. LAMBERT												
SCAMP	20													
2D MARINES		COL C. B. REDMAN	CAMLEJ			C2	P	2	1	1	2	C1	710831	
HQCO		CAPT G. W. SCHLITZ		261	5	C1		1	1	1	1			
1ST BN		LTCOL A. M. GRAY		1100	18	C3	T	1	1	1	3	C2	710730	8/106MM RR, 8/81 MORT
2D BN	13/15	LTCOL M. ROJO, JR.		927	19	C3	P	3	1	1	3	C2	710930	8/106MM RR, 8/81 MORT
3D BN (-) (32D MAU)	5*	LTCOL T. J. WILLIS	MED	945	33	C1		1	1	1	1			8/106MM RR, 8/81 MORT
SU 1, H&SCO, 3D BN (2D MAR)	*	1STLT J. R. LOWEY	CAMLEJ	23		C4	N	5	5	5	5			
6TH MARINES		COL F. R. KRAINCE	CAMLEJ			C2	P	2	1	1	2	C1	710831	
HQCO		CAPT R. J. SNOWDEN		309	6	C1		1	1	1	1			
1ST BN (-)	6	LTCOL T. F. QUALLS	CARIB	849	33	C2	P	2	1	1	1	C1	710930	8/106MM RR, 8/81 MORT
CO A, 1ST BN (-)		MAJ J. D. FOREMAN	CAMLEJ	252	6									
2D BN		MAJ J. F. DELANEY		860	13	C2	P	2	1	1	2	C1	710831	8/106MM RR, 8/81 MORT
3D BN		MAJ S. B. WANNER		997	34	C3	P	3	1	1	1	C2	710930	8/106MM RR, 8/81 MORT
8TH MARINES		COL E. M. YOUNG	CAMLEJ			C2	P	2	1	1	1	C1	710930	
HQCO		1STLT H. L. SAWYER		271	14	C1		1	1	1	1			
1ST BN		LTCOL M. H. IVINS		1004	25	C3	P	3	1	1	2	C2	710930	8/106MM RR, 8/81 MORT
2D BN (-)	9	LTCOL D. O. PAREDES	GTMO	761	26	C2	P	2	1	1	1	C1	710930	8/106MM RR, 8/81 MORT
CO E, 2D BN		CAPT C. Q. KELLER	CAMLEJ	194	4	C4	N	5	5	5	5			
3D BN		LTCOL W. H. RICE		999	27	C3	P	3	1	1	1	C2	710930	8/106MM RR, 8/81 MORT
10TH MARINES		COL C. A. WEBSTER	CAMLEJ			C4	P	4	1	1	2	C3	710930	
HQ BTRY		1STLT R. R. HARRIS		275	3	C1		1	1	1	1			
1ST BN		MAJ B. A. MUTCH		461	12	C3	P	3	1	1	1	C2	710930	18/105 HOW TD
2D BN		MAJ J. W. ROSS		388	10	C4	P	4	1	1	2	C3	710930	18/105 HOW TD
3D BN		LTCOL D. E. COOMBE		400	8	C4	P	4	1	1	2	C3	710930	18/105 HOW TD
4TH BN		LTCOL R. W. HEESCH		298	7	C4	P	4	1	1	2	C3	710930	1/M51 VTR, 18/155 HOW SP

Unclassified

*. PARENTHETIC UNIT INDICATES OPCON WHEN DIFFERENT FROM ORGANIZATIONAL STRUCTURE.

TAB 21-6

[redacted] UNCLASSIFIED

UNCLASSIFIED

MARINE CORPS COMMAND CENTER

STATUS OF FMF UNITS**

4 AUGUST 1971

UNIT*	NOTE	UNIT COMMANDER	LOCATION	STRENGTH USMC	STRENGTH USN	UNIT READINESS☆ CURRENT RATE	RSN	P	S	R	T	EXPECTED RATE	EXPECTED BY	MAJOR EQUIPMENT
2D SERV BN		COL S. DAVIS	CAMLEJ	948	21	C2	P	2	1	1	2	C1	710930	
2D MT BN		LTCOL W. S. GERICHTEN		264	5	C2	P	2	1	1	1	C1	710930	
2D ENGR BN		MAJ W. W. WIDENER		641	11	C3	P	3	1	1	3	C2	710930	
2D RECON BN		MAJ G. E. STRICKLAND		441	15	C2	T	1	1	1	2	C1	710831	
2D SP BN		MAJ R. J. KENWORTHY		493	13	C2	P	2	1	1	2	C1	710930	
2D MED BN		LCDR S. STEVENSON (USN)		154	179	C4	P	4	2	2	2	C3	710831	
2D DENTAL CO		CAPT A. P. GIAMMISSO (USN)			64	C2	R	2	1	1	1	C1	710930	
FORTPS, FMFLANT		BGEN J. C. FEGAN	CAMLEJ	5166	146	C2	P	2	1	1	2	C2	711001	
HQCO		MAJ R. M. OTTERAAEN		474		C1		1	1	1	1			
2D CIT		1STLT R. H. OSBON, JR.		16		C1		1	1	1	1			
5TH CIT														
2D FAG		COL W. W. HIXSON	CAMLEJ			C3	T	2	1	1	3	C2	710901	
HQ BTRY, 2D FAG		CAPT D. M. JORDAN		157	5	C1		1	1	1	1			
2D 8" HOW BTRY SP		MAJ G. E. GAUMONT, JR.		160		C2	X	3	1	1	2			1/M51 VTR, 6/8" HOW SP
2D 175MM GUN BTRY		MAJ L. D. VOGLER		119		C3	P	3	1	2	3	C2	710901	1/M51 VTR, 6/155 GUN SP, 6/175 GUN SP
5TH 175MM GUN BTRY SP		MAJ R. R. WRIGHT		147		C2	T	2	1	1	2	C1	710830	1/M51, 6/175 GUN SP
2D TANK BN (-)	25	LTCOL F. E. GRUBE	CAMLEJ	664	12	C3	P	3	1	1	3	C2	711001	17/M103 TK, 53/M48 TK, 5/M51 VTR, 9/M67 TK
2D AMTRAC BN (-)	21	MAJ E. E. GERDING		766	14	C4	P	4	1	1	4	C3	710901	4/LVTE-1, 11/LVTP-5 COMD, 142/LVTP-5, 4/LVTR
8TH COMM BN		LTCOL R. E. HAISLIP		625	9	C2	P	2	1	2	1	C2	710901	
8TH ENGR BN		LTCOL B. A. KAASMANN		714	13	C4	P	4	2	1	3	C2	710728	
8TH MT BN		LTCOL C. W. TONNACLIFF		323	4	C2	P	2	1	1	2	C1	710728	
2D RADIO BN (-)	29	LTCOL J. T. BRASSFIELD		344	4	C3	P	3	1	2	2	C2	710801	
2D ANGLICO		LTCOL D. E. SCHNEIDER		277	12	C3	T	2	1	1	3	C2	710930	
2D FORCE RECON CO		MAJ B. A. GREENE		138	3	C3	T	1	1	1	3	C2	710825	
2D TOPO CO		WO J. F. MCGRORY		83	1	C3	P	3	1	1	3	C2	710901	
2D BRIDGE CO		1STLT D. C. BELL		121	1	C3	P	3	1	1	3	C2	710901	
2D HOSPITAL CO		CAPT C. LIGON (USN)		30	21	C4	P	4	1	1	4	C3	710901	
22D DENTAL CO		CAPT W.H.HAGERMAN (USN)		5	36	C4	P	4	1	1	1	C2	710901	
2D SEP SURG CO (CADRE)		LCDR G. H. ASHTON (USN)		3	11	C4	N	5	5	5	5			
9TH SEP BULK FUEL CO (CADRE)														
2D MAW		MAJGEN G. C. AXTELL	CHERPT	14382	217	C2	X	2	2	2	3	C2	711231	
MWHS-2		COL D. O. SWINFORD		688	23	C1		1	1	1	1			
12TH FORCE DENTAL CO		CAPT J. H. SMITH (USN)		1	51	C3	P	3	1	1	1	C2	710901	
8TH CIT		WO E. J. JOHNSTON		18		C1		1	1	1	1			
6TH SSCT		1STLT V. E. STROTE		7		C2	R	1	1	2	1	C1	711001	
MATCU-78 (FMFLANT)	*	CAPT E. P. BASHER	QUANTICO	45		C3	X	4	1	2	4	C4	710731	
MWSG-27		LTCOL W. L. RICE	CHERPT			C3	P	3	1	2	2	C3	710801	
MAMS-27 (-)		LTCOL E. J. HEISE		724	10	C2	P	2	1	1	2	C1	711209	5/C-117D, 1/C-54S
SU 1, MAMS-27 (-)		CAPT K. D. MCCURRY		42		C1		1	1	1	1			
WERS-27		MAJ R. C. BAGLEY, JR.		195		C3	P	3	1	1	2	C2	711208	
VMGR-252 (2D MAW)	*	LTCOL U. V. STATZER		336	2	C3	X	3	2	2	4	C3	710901	11/KC-130F
MACG-28		COL J. W. LASETER	CHERPT			C2	P	2	2	2	2	C2	710809	
MAMS-28		MAJ E. S. OLIN		269	2	C2	T	2	1	1	2	C2	710723	
MASS-1		MAJ H. F. SAEGER		171		C3	P	3	1	1	2	C2	710930	
2D REDEYE PLAT		1STLT A. W. HEATH		35		C2	P	2	1	1	2	C2	710930	
MACS-5		MAJ J. R. THROGMORTON	BEAUFORT	222		C2	P	2	2	2	2			
MACS-6		MAJ A. M. YOUNGER	CHERPT	243		C3	T	2	2	2	3	C3	710801	
3D LAAM BN		LTCOL J. C. DIXON		555	9	C3	P	3	2	2	2	C3	710820	
MWCS-28		MAJ L. J. MITCHELL		188		C3	P	3	1	2	2	C4	710715	
MCCRTG-20		COL T. O. ELDER	CHERPT			C2	T	1	2	2	2	C3	710715	
MAMS-20		LTCOL R. C. BARRETT		602	2	C2	X	1	1	2	3	C1	710901	
VMFAT-201		LTCOL R. H. SCHULTZ		347	3	C3	X	3	1	2	4	C3	710815	4/F-4B, 25/F-4J
VMAT(AW)-202		LTCOL C. G. LAWSON		307	3	C4	R	2	2	4	3	C4	710715	14/A-6A, 3/TC-4C
VMT-203		LTCOL S. M. WILLIAMS		181	3	C3	T	2	1	1	3	C4	710715	19/TA-4F, 5/TA-4J

*PARENTHETIC UNIT INDICATES OPCON WHEN DIFFERENT FROM ORGANIZATIONAL STRUCTURE.

Unclassified

TAB 21-7

UNCLASSIFIED

[redacted]UNCLASSIFIED

MARINE CORPS COMMAND CENTER

STATUS OF FMF UNITS**

4 AUGUST 1971

UNIT*	NOTE	UNIT COMMANDER	LOCATION	STRENGTH USMC	STRENGTH USN	UNIT READINESS☆ CURRENT RATE	RSN	P	S	R	T	EXPECTED RATE	EXPECTED BY	MAJOR EQUIPMENT
MHTG-40		COL R. B. ENGESSER	NEW RIVER			C1		1	1	1	1			
H&MS-40		MAJ J. P. KIZER		267	1	C1		1	1	1	1			
HMMT-401		LTCOL H. D. GRESS, JR.		124		C1		1	1	1	1			10/CH-53D
HMMT-402		LTCOL J. L. FELTER		163		C1		1	1	1	1			19/CH-46F
MAG-14		COL W. R. NOWADNICK	CHERPT			C3	X	3	2	2	4	C2	710801	
H&MS-14		LTCOL J. D. DUNN		646		C2	P	2	1	1	2	C2	711001	1/A-6A, 2/EA-6A, 6/F-4B, 4/TA-4F
MAB-14 (-)		MAJ C. M. DOYLE		309	9	C3	P	3	1	2	1	C3	711001	
SU 1, MABS-14 (-)		MAJ B. L. MEEK	BOGUE, NC	231		C1		1	1	1	1			
MATCU-61		CAPT G. P. HAYES		60		C2	P	2	1	1	2	C2	710715	
VMCJ-2 (-)		LTCOL J. L. GREEN	CHERPT	355	3	C2	R	1	1	2	2	C2	711001	14/EA-6A/ 9/RF-4B
DET 60, VMCJ-2 (6THFLT)	*16		USS SARATOGA	143	1	C1		1	1	1	1			4/EA-6A
VMA(AW)-121		MAJ E. A. BIRZER	CHERPT	193	1	C3	P	3	1	3	2	C2	710801	11/A-6A
VMA(AW)-224		LTCOL B. R. STANDLEY		281	3	C3	P	1	1	3	2	C2	710616	12/A-6A
VMA(AW)-332		LTCOL P. R. JONES, JR.		180	2	C2	P	2	1	1	2	C1	710831	11/A-6A
VMFA-312		MAJ R. G. KROPP		181		C4	P	4	2	3	4	C4	711001	7/F-4B
DET 14, 2D MAW (NAS, KEY WEST)	*		KEY WEST	84		C1		1	1	1	1			3/F-4B
MAG-26		COL G. R. HUNTER	NEW RIVER			C1		1	1	1	1	C1	710702	
H&MS-26		MAJ C. E. CANNON		586		C2	X	2	1	1	1	C2	710721	31/CH-46F, 17/CH-53A, 11/CH-53D
MABS-26		MAJ Z. V. LAMASCUS		477	44	C4	P	4	1	1	1	C4	710901	
MATCU-64 (MAG-26)	*	CAPT D. W. ESMOND		42		C4	P	4	1	2	3	C3	710915	
VMO-1		LTCOL R. D. MYERS		188		C3	P	3	2	3	1	C3	710806	16/OV-10A
HMA-269		LTCOL L. W. SMITH		243		C4	T	4	1	1	4	C2	710901	26/AH-1J, 6/UH-1E, 10/UH-1N
HML-167		LTCOL H. S. LOWREY												
HMM-162 (32D MAU)	*5	LTCOL J. W. ALBER	32D MAU	237	3	C1		1	1	1	1			12/CH-46F, 4/CH-53D, 2/UH-1E
HMM-261		MAJ D. R. ALLEN, JR.	NEW RIVER	269		C2	R	1	1	2	1	C2	710901	23/CH-46F
HMM-263		LTCOL V. W. HAZELBAKER	QUANTICO			C4	N	5	5	5	5			20/CH-46D, 4/CH-46F
HMM-264		MAJ R. K. GOFORTH	NEW RIVER	264		C1		1	1	1	1			28/CH-46F
HMH-362		MAJ R. F. WILEY		185		C2	R	1	1	2	1	C2	710901	16/CH-53D
HMH-461		LTCOL D. E. WEBB		193		C1		1	1	1	1	C2	710801	1/CH-53A, 16/CH-53D
MAG-31		COL N. B. MCCRARY	BEAUFORT			C3	P	3	1	2	3	C2	710711	
H&MS-31		MAJ G. B. FERRINGTON		671		C3	R	2	1	3	2	C3	710815	1/C-117D, 2/F-4B, 4/F-4J, 3/TA-4F
MABS-31		MAJ J. L. CUNNINGHAM		328	18	C3	P	3	1	1	3	C3	710903	
MATCU-69		CAPT W. T. FARROW		39		C4	P	4	1	1	4	C4	710731	
VMFA-251		MAJ J. M. MEAD		274	1	C3	T	2	1	2	3	C2	710801	13/F-4B, 7/F-4J
VMFA-333 (CVA-66)	*3	LTCOL R. PLANT	USS AMERICA	303	1	C2	R	1	2	2	2			11/F-4J
VMFA-451		LTCOL R. J. WEISS	BEAUFORT	267	1	C3	T	3	1	3	3	C2	710930	18/F-4J
MAG-32		COL H. HUNTER, JR.	BEAUFORT			C2	X	2	2	3	3	C2	710813	
H&MS-32		MAJ R. L. UPCHURCH		519		C2	X	3	2	2	2	C2	710801	1/C-117D, 5/TA-4F
MABS-32		MAJ H. R. PALMATEER		386	17	C2	P	2	1	2	1	C2	710805	
MATCU-63		1STLT M. M. HENDERSON		36		C3	X	4	1	2	2	C3	710805	
VMA-324		LTCOL G. J. ERTLMEIER		179	1	C2	X	2	2	2	3	C2	710730	5/A-4E, 12/A-4M
VMA-331		LTCOL P. E. BROOKSHIRE		174	1	C4	R	2	1	4	2	C3	710722	20/A-4E
VMA-513		LTCOL C. M. BAKER		132	2	C4	T	4	3	2	4	C3	711101	6/AV-8A
2D FSR		COL E. C. DRESBACH, JR.	CAMLEJ	2103	27	C3	P	3	1	2	3	C4	711001	
H&SBN		LTCOL J. B. CANTIENY		609	19	C3	P	3	2	2	3	C2	710801	
SUPPLY BN		LTCOL D. J. BEARD		751	8	C4	P	4	1	1	4	C4	711001	
MAINT BN		LTCOL C. L. BOOTH		743		C3	P	3	1	1	3	C4	711001	1/LVTP-5, 3/LVTR, 1/M103 TK, 1/M48 TK, 4/M51 VTR, 1/M67 TK

* PARENTHETIC UNIT INDICATES OPCON WHEN DIFFERENT FROM ORGANIZATIONAL STRUCTURE.

Unclassified

TAB 21-8

[redacted]UNCLASSIFIED

UNCLASSIFIED

MARINE CORPS COMMAND CENTER

STATUS OF FMF UNITS**

4 AUGUST 1971

UNIT	NOTE	UNIT COMMANDER	LOCATION	STRENGTH		UNIT READINESS☆								MAJOR EQUIPMENT
						CURRENT						EXPECTED		
				USMC	USN	RATE	RSN	P	S	R	T	RATE	BY	

UNIT READINESS RATING CATEGORY

C-1 FULLY COMBAT READY
C-2 SUBSTANTIALLY COMBAT READY
C-3 MARGINALLY COMBAT READY
C-4 NOT COMBAT READY

READINESS ABBREVIATIONS

P PERSONNEL READINESS
S SUPPLIES/EQUIPMENT ON HAND
R EQUIPMENT READINESS
T TRAINING READINESS
X COMMANDERS SUBJECTIVE JUDGEMENT
N RESOURCE ALLOCATION BY COGNIZANT SERVICE DOES NOT PERMIT A HIGHER C-RATING

NOTES

1. BLT 1/4 BREAKDOWN ON TAB 34.
2. 31ST MAU BREAKDOWN ON TAB 34.
3. ABOARD USS AMERICA (CVA-66).
4. ASSIGNED III MAF
5. LANFOR6THFLT 1-71 (32D MAU) BREAKDOWN ON TAB 36.
6. LANFORCARIB 1-71 BREAKDOWN ON TAB 36.
7. AT FUJI TRNG (3D RECON BN (-)(REIN), CO B, 3D TANK BN AND BTRY F/2/12).
8. H&SCO, CO B, 1ST SP BN IN CAIRE STATUS.
9. GTMO BN (REIN) BREAKDOWN ON TAB 36-2.
10. TRUCK CO, 1ST SERV BN (CAIRE).
11. CO C, 7TH ENGR BN (CAIRE).
12. THIS UNIT IS BOTH ADCON/OPCON TO WERS-17 (-).
13. AIR ALERT BATTALION.
14. PERSONNEL AND EQUIPMENT CARRIED IN HQBN, 1ST MARDIV.
15. VIEQUES TRNG (DET, H&SCO, CO E, 2/2).
16. ABOARD USS SARATOGA (CVA-60).
17. INCLUDES STRENGTH CO D, 7TH ENGR BN AND 1ST PLAT, 1ST BRIDGE CO.
18. H&SCO, CO B, CO C, AND CO D, 1ST TANK BN (CAIRE).
19. H&SCO, CO B, AND CO C, 3D AMTRAC BN (CAIRE).
20. PERSONNEL AND EQUIPMENT CARRIED IN HQBN, 2D MARDIV.
21. ONE PLATOON IS DEPLOYED WITH LANFOR6THFLT 1-71 AND ALSO ONE PLATOON WTIH LANFORCARIB 1-71.
22. PERSONNEL AND EQUIPMENT CARRIED IN HQBN, 3D MARDIV.
23. UNASSIGNED.
24. SANGLEY AUGMENTATION FORCE (DET, 4TH MARINES w/2 OFF AND 152 ENL) AT SANGLEY PT, R.P.I.
25. ONE PLATOON IS DEPLOYED WITH LANFOR6THFLT 1-71, ONE PLATOON WITH LANFORCARIB 1-71 AND ONE PLATOON WITH THE GTMO BN.
26. STRENGTH INCLUDES DET, H&SCO, DET, ENGR SPT CO, AND CO A, 1ST ENGR BN.
27. THIS UNIT IS BOTH ADCON/OPCON TO MAG-12, HOWEVER, IS PHYSICALLY LOCATED ON OKINAWA WITH THEIR STRENGTH CARRIED UNDER OKINAWA.
28. FOUR OFFICERS AND 15 ENLISTED ATTACHED TO VAL-4 FOR EVALUATION OF YOV-10D.
29. TWO OFF & 32 ENL DEPLOYED TO MOROCCO & 1 OFF & 10 ENL DEPLOYED TO GTMO ON A PERMANENT BASIS.

** SOURCE: MARES FORSTAT REPORT DATED 7 JULY 1971.

UNCLASSIFIED

TAB 21-9

Unclassified

UNCLASSIFIED

MARINE CORPS COMMAND CENTER

RECAPITULATION OF FMF ACTUAL STRENGTHS*

FMF

4 AUGUST 1971

UNIT	GROUND		AIR		GRAND TOTAL	
	USMC	USN	USMC	USN	USMC	USN
FMF	63,141	2,227	36,138	601	99,279	2,828

PACIFIC

FMFPAC	38,739	1,400	21,677	384	60,416	1,784
MIDPAC	3,744	133	1,942	25	5,682	158
HQ, FMFPAC	980	36	63		1,043	36
1ST MARBDE	2,021	84	1,875	25	3,896	109
OTHER	743	13			743	13
WESTPAC (III MAF)	17,671	633	8,851	139	26,522	772
III MAF (OKINAWA)	17,671	633	3,021	32	20,692	665
HQ, III MAF	131				131	
3D MARDIV (-)(REIN)	14,460	583			14,460	583
1ST MAW			3,021	32	3,021	32
3D FSR	3,080	50			3,080	50
III MAF (JAPAN)			5,830	107	5,830	107
1ST MAW			5,830	107	5,830	107
(1) LANFOR 7TH FLT	2,837	129	370	3	3,207	132
31ST MAU	1,420	63	353	3	1,773	66
BLT 1/4	1,352	74			1,352	74
EASTPAC	17,324	634	10,888	220	28,212	854
HQ, I MAF	21				21	
1ST MARDIV (-)(REIN)	14,244	515			14,244	515
FORTRPS, FMFPAC	1,495	75			1,495	75
3D MAW			10,888	220	10,888	220
1ST FSR	1,564	44			1,564	44

ATLANTIC

FMFLANT	24,402	827	14,461	217	38,863	1,044
EAST COAST	24,402	827	14,471	217	38,863	1,044
HQ, FMFLANT	726	4	79		805	4
2D MARDIV	16,407	650			16,407	650
FORTRPS, FMFLANT	5,166	146			5,166	146
2D MAW			14,382	217	14,382	217
2D FSR	2,103	27			2,103	27
(2) CARIBBEAN	2,191	82			2,191	82
GTMO BN (REIN)	1,001	34			1,001	34
LANFORCARIB 1-71	1,190	48			1,190	48
(2) MEDITERRANEAN	1,472	69	684	5	2,156	74
LANFOR6THFLT 1-71 (32D MAU)	1,472	69	238	3	1,710	72
DET 60, VMCJ-1			143	1	143	1
VMFA-333			303	1	303	1

NOTES:
(1) STRENGTH INCLUDED IN III MAF OKINAWA.
(2) STRENGTH INCLUDED IN EAST COAST.

UNCLASSIFIED

Unclassified

*SOURCE: MARES FORSTAT REPORT DATED 7JUL71.

TAB 22

[redacted]

[redacted]

UNCLASSIFIED

MARINE CORPS COMMAND CENTER

DISTRIBUTION OF MAJOR GROUND EQUIPMENT AND AIRCRAFT

GROUND EQUIPMENT

4 AUGUST 1971

EQUIPMENT		NOTE	TOTAL EQUIP	JAPAN	OKI	7TH FLT MAUs	MID PAC	CAM PEN	29 PALMS			CAM LEJ	GTMO	6TH FLT MAUs	CARIB	OTHER
81MM MORTAR	M29		204		33	16	16	67				48	8	8	8	
106MM RR	M40A1C		204		33	16	16	67				48	8	8	8	
107MM	M30		6					6								
105MM HOW TD	M101A	4	162	6	42	12	18	30				42		6	6	
155MM HOW TD	M114A1		5					5								
155MM HOW SP	M109		35		17							18				
155MM GUN SP	M53		32						26			6				
175MM GUN SP			24						12			12				
8" HOW SP	M110		12		2				4			6				
90MM GUN TANK	M48	4	137	5	43	10		25				37	7	5	5	
120MM GUN TANK	M-103		33					15				13	5			
FLAME TANK	M-67		25		8			7				8	2			
VTR	M-51		28		6			5	4			13				
LVTR	M-51		14		3		1	3				7				
LVTP-5 COMD			32		8	2	3	8				9		1	1	
LVTP-5			354		77	20	44	70				123		10	10	
LVTE-1			16		7			5				4				

AIRCRAFT

AIRCRAFT	NOTE	TOTAL A/C	JAPAN	OKI	7TH FLT MAUs	MID PAC	EL TORO	SANTA ANA	YUMA	CH PT	BEAU	NEW RIVER	6TH FLT MAUs	CARIB	OTHER
FIXED WING															
C-117D		19	5			1	6			5	2				
KC-130F		30		9			10			11					
C-54P/Q/R/S		6	3				2			1					
TA-4F		67	10			2	8		16	23	8				
TA-4J		7							2	5					
TC-4C		3								3					
T-28B		5				5									
AV-8A		6									6				
A-6A		81	12				20			49					
EA-6A	1	28	6				2			16					4
RF-4B		28	9				10			9					
F-4B	3	115	14			8	36		22	17	15				3
F-4J	5	108	15			28				25	28				12
A-4E		98	41						26		31				
A-4F		22					22								
A-4M		12									12				
OV-10A	2	62		14		6	4	12				16			10
US-2B		1				1									
HELICOPTERS															
UH-1E	2	56		14	4	8						6	2		22
UH-1N		10										10			
AH-1G		21		21											
AH-1J		30		4								26			
CH-46A		5				5									
CH-46D	6	128		44	13	30		21							20
CH-46F	6	159						42				101	12		4
CH-53A		66						48				18			
CH-53D		95		16	4	18						53	4		
VH-34D		1				1									
UV-34D		2				2									

NOTES:
1. DET, VMCJ-2 ABOARD USS SARATOGA (CVA-60) IN "OTHER" (4/EA-6A A/C ASSIGNED). AFLOAT MED.
2. AT CAMPEN IN "OTHER".
3. AT KEY WEST IN "OTHER".
4. AT FUJI TRNG AREA, 3D RECON BN (-) WITH CO B, 3D TANK BN (-) AND BTRY F/2/12.
5. ABOARD USS AMERICA (CVA-66)(VMFA-333)(12/F-4J) IN "OTHER".
6. AT QUANTICO "OTHER".

Unclassified

UNCLASSIFIED

[redacted]

TAB-23

UNCLASSIFIED
[redacted]

MARINE CORPS COMMAND CENTER

FLEET MARINE FORCE DISPOSITION

4 AUGUST 1971

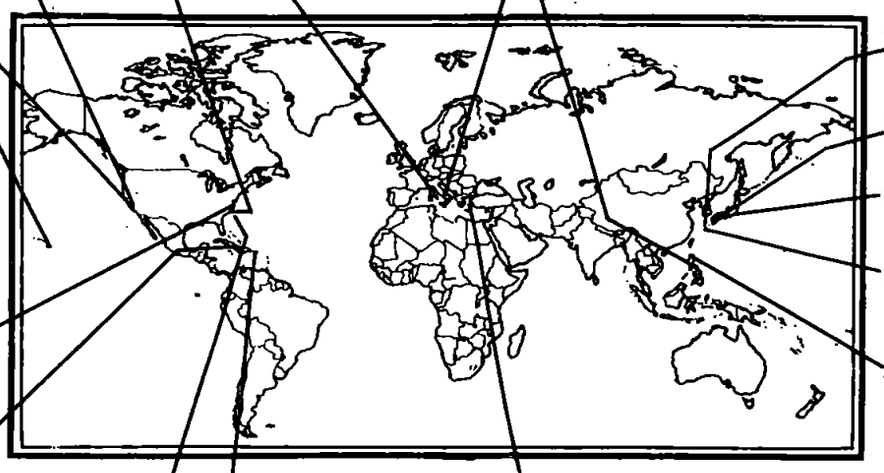

DISTRIBUTION BY BATTALION/SQUADRON

	INF BNS	VMFA	VMA	VMA(AW)	VMCJ	HMM	HMH	*HML	VMO	VMGR
WESTPAC	6	2	2	1	1	2	1	1	1	1
OKINAWA	(4)	(2)	(2)	(1)	(1)	(1)	(1)	(1)	(1)	(1)
JAPAN										
LANDING FORCE	(2)					(1)				
MIDPAC	2	3				1	1			
HAWAII	(2)	(3)				(1)	(1)			
EASTPAC	10	4	2	2	1	2	2	1	1	1
EL TORO/SANTA ANA		(4)	(2)	(2)	(1)	(2)	(2)			(1)
CAMPEN	(10)							(1)	(1)	
ATLANTIC	8	4	3	3	1	3	2	*2	1	1
CAMP LEJEUNE	(6)									
CHERRY POINT		(1)		(3)	(1)					(1)
BEAUFORT		(3)	(3)							
NEW RIVER						(2)	(2)	*(2)	(1)	
QUANTICO						(1)				
CARIB	(2)									
EUROPE	1					1				
MEDITERRANEAN	(1)					(1)				
GRAND TOTAL	27	13	7	6	3	9	6	4	3	3

*HMA-269, MAG-26 AT NEW RIVER, N. C.

UNCLASSIFIED
[redacted]

TAB 31-1

Unclassified

[redacted]AL

UNCLASSIFIED

MARINE CORPS COMMAND CENTER

4 AUGUST 1971

FLEET MARINE FORCE MOVEMENTS

	UNIT	ETD/ATD	FROM	DESTINATION	ETA/ATA
	MOVEMENTS 29 JULY - 4 AUGUST 1971				
(1)	VMFA-333	2AUG71	NAPLES, ITALY	OPS TYRRHENIAN SEA	3AUG71
(3)	DET 60, VMCJ-2	30JUL71	SOUDA BAY, CRETE	OPS AEGEAN SEA	31JUL71
(4)	LANFOR7THFLT (31ST MAU)	31JUL71	MINDORO ISLAND, R.P.I.	SUBIC BAY, R.P.I.	2AUG71
(5)	VMA(AW)-224	30JUL71	FALLON, NEVADA	CHERRY POINT, NORTH CAROLINA	30JUL71
(8)	LANFORCARIB 1-71 (BLT 1/6)	1AUG71	JAMAICA	MOREHEAD CITY, NORTH CAROLINA	5AUG71
(9)	BLT 3/4 - BLT 1/4	1AUG71	TURNOVER		
(10)	56TH MAU (USMCR)	3AUG71	CAMP LEJEUNE, NORTH CAROLINA		
	HMA-773 (USMCR)	1AUG71	ACTIVATED (SANTA ANA, CALIFORNIA)		
	PROJECTED MOVEMENTS 5 - 11 AUGUST 1971				
(3)	DET 60, VCMJ-2	5AUG71	AEGEAN SEA	ATHENS, GREECE	5AUG71
(1)	VMFA-333	10AUG71	OPS WESTERN MED	PALMA, MALLORCA, SPAIN	11AUG71
(2)	LANFOR6THFLT 1-71 (32D MAU)	6AUG71	NAPLES, ITALY	PORTO SCUDO, SARDINIA	8AUG71
(10)	53D MAU (USMCR)	5AUG71	CAMP PENDLETON, CALIFORNIA		

NOTES:

(1) CONDUCTING OPERATIONS IN THE TYRRHENIAN SEA/WESTERN MEDITERRANEAN AREAS (3-8AUG71) AND SCHEDULED FOR PARTICIPATION IN EXERCISE CRAE AT CAPO TEULADA, SARDINIA, DURING THE PERIOD 9-10AUG71. EXERCISE CRAE (COMBAT READINESS ASSESSMENT EXERCISE) WILL BE A LIVE ORDNANCE EXERCISE TO TEST ALL ELEMENTS OF CONVENTIONAL AVIATION ORDNANCE DELIVERY AND RESUPPLY. SCHEDULED FOR PORT VISIT PALMA, MALLORCA, SPAIN (11-15AUG71).

(2) UPKEEP NAPLES, ITALY (23JUL-6AUG71). LANFORSIXTHFLT 1-71 (32D MAU) WILL PARTICIPATE IN PHIBLEX 2-72 DURING THE PERIOD 8-18AUG71, CONDUCTING THE HELIBORNE AND AMPHIBIOUS ASSAULT AT PORTO SCUDO, SARDINIA, WHICH WILL BE FOLLOWED BY A LIVE FIRING EXERCISE AT CAPO TEULADA, SARDINIA, IMPACT AREA FOR TRAINING IN NAVAL GUNFIRE SUPPORT, CLOSE AIR SUPPORT, AND WITH ALL ORGANIC MAU WEAPONS.

(3) SCHEDULED FOR UPKEEP ATHENS, GREECE, DURING THE PERIOD 5-16AUG71.

(4) AT SUBIC BAY, R.P.I. (2-22AUG71) FOR UPKEEP.

(5) DET VMA(AW)-224 DEPARTED FALLON, NEVADA, AND ARRIVED CHERRY POINT, NORTH CAROLINA, ON 30JUL71.

(6) CG, I MAF ACTIVATED THE 7TH MAB (HQ, 7TH MAB, 7TH MARINES AND PROV MAG-50) FOR PLANNING ON 1JUL71 FOR PARTICIPATION IN ROPEVAL 3-71. A MAB SIZE AMPHIBIOUS EXERCISE TO BE CONDUCTED IN THE CAMP PENDLETON/CLEVELAND NATIONAL FOREST AREAS DURING THE PERIOD 8-17SEP71. LANDING FORCE OPERATIONS WILL BE DESIGNED TO TRAIN FORCES IN THE PLANNING AND EXECUTION OF AMPHIBIOUS OPERATIONS INVOLVING THE TECHNIQUE OF STAND-OFF AMPHIBIOUS ASSAULT AND ASPECTS OF THE SEA-BASING CONCEPT. BGEN P. G. GRAHAM, CG, FORTRPS FMFPAC, IS DESIGNATED AS CG 7TH MAB.

(7) CG FMFLANT ACTIVATED THE 8TH MAB (HQ, 8TH MAB, 34TH MAU AND PROV MAG-40) FOR PLANNING AND PARTICIPATION IN EXERCISE DEEP FURROW-71. EXERCISE DEEP FURROW-71 IS A JOINT AND COMBINED NATO EXERCISE TO BE CONDUCTED DURING THE PERIOD 9-20OCT71 TO INCLUDE AMPHIBIOUS LANDINGS IN TURKISH THRACE BY A COMBINED U.S. AND UNITED KINGDOM/ITALIAN LANDING FORCE. BGEN T. H. MILLER, JR., AWC 2D MAW, IS DESIGNATED AS CG 8TH MAB.

(8) LANFORCARIB 1-71 (BLT 1/6) IS SCHEDULED TO ARRIVE MOREHEAD CITY, NORTH CAROLINA, ON 5AUG71 AND ASSUME CONUS STANDBY FROM 6AUG-10SEP71.

(9) BLT 3/4 TURNED OVER 7TH FLEET RESPONSIBILITY (READY BLT) TO BLT 1/4 WHICH WILL REMAIN ON OKINAWA STANDBY.

(10) THE 56TH MAU, USMCR, (2D BN, 25TH MAR (GARDEN CITY, N. Y.), PROV MAG-41 (DALLAS, TEX.), VMA-131 (NEW YORK, N.Y.), HMM-777 (DALLAS, TEX.) AND HMM-766 (DETROIT, MICH.)) IS CONDUCTING AN AMPHIBIOUS TRAINING EXERCISE, MAULEX 8-71, AT CAMP LEJEUNE DURING THE PERIOD 3-5AUG71. THE 53D MAU, USMCR, (3D BN, 23D MAR (SAN BRUNO, CALIF.), PROV MAG-46 (SANTA ANA, CALIF.), VMA-543 (GLENVIEW, ILL.), HMM-764 (LOS ALAMITOS, CALIF.) AND HMM-770 (WHIDBEY ISLAND, CALIF.)) IS CONDUCTING AN AMPHIBIOUS TRAINING EXERCISE, MAULEX 3-71, AT CAMP PENDLETON DURING THE PERIOD 5-7AUG71.

UNCLASSIFIED

TAB 31-2

Unclassified [redacted]

[redacted] UNCLASSIFIED

MARINE CORPS COMMAND CENTER

FMF PACIFIC UNIT LOCATIONS AND STRENGTHS*
(MIDPAC/EASTPAC)

4 AUGUST 1971

MIDPAC

FMFPAC

HQ, FMFPAC

1st MAR BDE

HQ, 1ST MAR BDE (KANEOHE)

3D MARINES (-)(REIN)
- 1/3
- 2/3

MAG-24
- VMFA-212 (F-4J)
- VMFA-235 (F-4J)
- VMFA-122 (F-4B)
- HMM-262 (CH-46D)
- HMH-463 (CH-53D)
- DET, VMO-6 (-) (OV-10A)
- DET, HML-367(-) (UH-1E)

MIDPAC STRENGTH RECAPITULATION	USMC	USN
HQ, FMFPAC	1,043	36
HQ, 1ST MAR BDE	280	14
3D MAR(-)(REIN)	1,386	70
SERVICE/SUPPORT UNITS	355	
MAG-24	1,875	25
OTHER	772	13
GRAND TOTAL MIDPAC	5,711	158

EASTPAC

	USMC	USN
HQ, I MAF	21	
1ST MAR DIV (-) (REIN)	14,244	515
HQ, FORTRPS FMFPAC	1,495	75
3D MAW	10,888	220
1ST FSR	1,564	44
GRAND TOTAL EASTPAC	28,212	854

I MAF

HQ, I MAF (CAMP PENDLETON)

1ST MAR DIV (-) (REIN)

1ST MARINES
- 1/1
- 2/1
- 3/1

5TH MARINES 3/3 (CADRE)
- 1/5
- 2/5
- 3/5

7TH MARINES
- 1/7 (CADRE)
- 2/7
- 3/7

FORTRPS FMFPAC

HQ, FORTRPS FMFPAC (29 PALMS)

3D MAW

HQ, 3D MAW (EL TORO)

MAG-13 (EL TORO)
- VMA-223 (A-4F)
- VMA-214 (A-4F)
- VMA(AW)-242 (A-6A)
- VMCJ-3 (RF-4B/EA-6A)
- VMFA-314
- VMFA-323 (F-4B)
- VMFA-334
- VMFA-531 (F-4B)
- VMA(AW)-225

MWSG-37 (EL TORO)
- VMGR-352 (KC-130F)

MHTG-30 (SANTA ANA)
- HMHT-301 (CH-53A)
- HMMT-302 (CH-46F)

MAG-16 (SANTA ANA)
- HMM-161 (CH-46D)
- HMM-163 (CH-46F)
- HMH-361 (CH-53A)
- HMH-363 (CH-53A)

MAG-16 ELEMENTS (CAMPEN)
- VMO-2
- HML-267 (OV-10A/UH-1E)

MCCRTG-10 (YUMA)
- VMFAT-101 (F-4B)
- VMAT-102 (A-4E)
- VMT-103 (TA-4F/J)

1ST FSR

*SOURCE: MARES FORSTAT REPORT DATED 7JUL71.

Unclassified

UNCLASSIFIED [redacted]

TAB 32

[redacted] UNCLASSIFIED

MARINE CORPS COMMAND CENTER

FMF-PACIFIC UNIT LOCATIONS AND STRENGTHS AND OSD CEILING CONSIDERATIONS (WESTPAC)

4 AUGUST 1971

RVN

USMC TRANSITIONAL SUPPORT FORCE

NAVFORV	5
HQ STAFF MACV	49
JUSPAO	4
SAE	2
I CORPS	3
NAV ADV GRU	80
SOG	17
AID DEPT STATE	3
DEF COM AGCY	11
SUB UNIT 1, 1ST ANGLICO	180
EMBASSY SECURITY	156
CORDS	5
NOG DET YOV-10	21
DCPG LNO	3
DET, H&HS-18	20
DOD SPEC REP	3
ROK LOG TEAM	13
CREDIT ACCOUNT	60
MEDTC	1
WESTPAC TRANS OFF	1
TOTAL - OSD PROGRAM XIII SPACE AUTHORIZATION	637

	USMC	USN
OSD PROGRAM XIII SPACE AUTHORIZATION	637	
SUB UNIT 1, 1ST ANGLICO	168	10
MACV STAFF/MACV FIELD	167	
NAVADVGRU/MACV UNITS	63	
OTHERS	171	
TOTAL RVN STRENGTH AS OF 29JUL71	569	10

OKINAWA

III MAF (TF-79)

HQ, III MAF

3D MARDIV (-) (REIN) (TF-79.2)

HQ, 3D MARDIV (-)(REIN)
- 4TH MARINES
  - 1/4 (BLT)
  - 2/4
  - 3/4
- 9TH MARINES
  - 1/9
  - 2/9 (31ST MAU)
  - 3/9

1ST MAW

MAG-36

VMGR-152	(KC-130F)
VMO-6 (-)	(OV-10A/UH-1E)
HMH-462	(CH-53D)
HMM-164	(CH-46D/CH-53D/UH-1E)(31ST MAU)
HMM-165	(CH-46D)
HML-367	(UH-1E/AH-1G/J)

3D FSR

		USMC	USN
	OSD PROGRAM XIII SPACE AUTHORIZATION	19,249	934
	OKINAWA STRENGTH RECAPITULATION		
	III MAF		
	HQ, III MAF	131	
(3)	3D MARDIV (-)(REIN)	12,666	580
	1ST MAW ELEMENTS	3,021	32
	3D FSR	3,080	50
(1)	III MAF TOTAL	18,898	662
	OTHERS		
	MCB CAMP BUTLER/NON FMF	1,295	25
	NON-DEPLOYABLE CASUALS	0	
	SVN ORIGINATED PATIENTS	3	
	OTHER TOTAL	1,298	25
	GRAND TOTAL OKINAWA STRENGTH AS OF 22JUL71.	20,196	687

JAPAN

1ST MAW (TF-79.3)

HQ, 1ST MAW

MAG-12

VMA-211	(A-4E)
VMA-311	(A-4E)
VMA(AW)-533	(A-6A)

MAG-15

VMFA-115	(F-4B)
VMFA-232	(F-4J)
VMCJ-1	(EA-6A/RF-4B)

		USMC	USN
	OSD PROGRAM XIII SPACE AUTHORIZATION	7,000	
	JAPAN STRENGTH RECAPITULATION		
	HQ, 1ST MAW	853	54
	1ST MAW	5,276	53
(2)	NON-FMF	1,043	
	GRAND TOTAL JAPAN STRENGTH AS OF 22JUL71.	7,172	107

NOTES
(1) LESS ONE MAU.
(2) INCLUDES MCAS, IWAKUNI, MB YOKOSUKA, MB SASEBO, AND CO "E", MAR SPT BN.
(3) SANGLEY AUGMENTATION FORCE (DET, 4TH MARINES) CONSISTING OF 2 OFF AND 152 ENL INCLUDED IN 3D MARDIV (-) (REIN) STRENGTH.

SOURCES: RVN STRENGTH: COMUSMACV WEEKLY STRENGTH REPORT MSG 310806ZJUL71.

OKI/JAPAN STRENGTH: FMFPAC WESTPAC STRENGTH VERIFICATION MSG 270209ZJUL71.

UNCLASSIFIED

Unclassified

TAB 33

[redacted]

[redacted]L

UNCLASSIFIED

MARINE CORPS COMMAND CENTER

LANDING FORCES, SEVENTH FLEET
31st MAU*

14 JULY 1971

UNITS EMBARKED TASK GROUP 79.4	STRENGTH USMC OFF	STRENGTH USMC ENL	STRENGTH USN OFF	STRENGTH USN ENL
31ST MAU HQ DET	9	13		
COL E. F. ROTH, JR.				
BLT 2/9				
(LTCOL F. J. JOHNSON, JR.)				
2D BN, 9TH MARINES	48	991	2	32
E/2/12TH MARINES	4	89		2
PLT, CO C, 3D RECON BN	1	23		2
PLT, CO B, 1ST AMTRAC BN	1	44		1
PLT, CO C, 3D SP BN	1	38		2
PLT, CO A, 3D MT BN	1	21		
PLT, CO A, 3D TANK BN	1	26		1
PLT, CO A, 3D ENGR BN	1	37		1
PLT, CO B, 3D MED BN		5	1	16
DET, HQBN, 3D MARDIV	1	7		
LOGISTIC SUPPORT UNIT				
DET, 3D SERV BN	1	31		1
DET, 3D FSR	1	25		
DET, 3D DENTAL CO			1	1
HMM-164	53	239	1	2
(LTCOL A. J. KETTERING)				
DET, HMH-462	8	29		
DET, HML-367	7	17		
TOTALS	138	1635	5	61

SHIPPING

USS NEW ORLEANS (LPH-11)
USS VANCOUVER (LPD-2)
USS WEXFORD COUNTY (LST-1168)
USS THOMASTON (LSD-28)

AIRCRAFT

13/CH-46D
4/CH-53D
4/UH-1E

ARMS & EQUIPMENT

1 LVTP-5 CMD
10 LVTP-5
5 M48 TANKS
6 105 HOW TD
8 106MM RR
8 81MM MORTAR
36 TRUCK, UTILITY PLATFORM W/O 106 RR, M-274
40 TRUCK, UTILITY, M-151 & M-715
1 TRUCK, UTILITY MRC-83
2 TRUCK, UTILITY MRC-123
4 TRUCK, UTILITY MRC-109
1 TRUCK, UTILITY MRC-124
1 TRUCK, UTILITY MRC-135
1 TRUCK, AMBULANCE M-718
1 TRUCK, CARGO 5T M-54
2 TRUCK, TANK M-49
2 TRUCK, DUMP 5T M-51
5 TRUCK, CARGO 3/4T M-37
35 TRUCK, CARGO 2½T M-35
1 TRUCK, WRECKER 5T M-543
36 TRAILER, CARGO M-416
17 TRAILER, CARGO M-105
6 TRAILER, TANK WATER M-149
2 TRAILER, CARGO M-101
2 KW LIGHT UNIT
4 TRACTOR TD-15 & TD-25
3 CRANE M-60 & M-62
1 HYPOCHLORINATION UNIT
2 TRUCK, M-43
2 ROUGH TERRAIN FORK LIFT (6000 LBS)
1 STEAM CLEANER
1 WATER PURIFICATION UNIT
1 BATH UNIT
2 GENERATOR PU 708/G & PU 692/G
4 GENERATOR PU-667 & PU 669
51 M60 MG
18 M60 MG HELO MOUNTED
39 50 CAL. HELO MOUNTED
6 60MM MORTAR
24 3.5 ROCKET LAUNCHER
8 FLAME THROWERS
10 50 CAL. MG

BLT 1/4

4 AUGUST 1971

UNITS EMBARKED TASK GROUP 79.5	STRENGTH USMC OFF	STRENGTH USMC ENL	STRENGTH USN OFF	STRENGTH USN ENL
BLT 1/4				
(LTCOL D. G. ROBISON)				
1ST BN, 4TH MARINES	44	934	2	44
BTRY "C" (REIN), 3D BN, 12TH MAR	8	119	1	2
PLT, CO D, 3D RECON BN	1	20		
PLT, CO A, 1ST AMTRAC BN	1	39		1
PLT, CO C, 3D TANK BN	1	27		1
PLT, CO C, 9TH MT BN	1	22		
PLT, CO C, 3D ENGR BN	1	39		1
PLT, CO C, 3D SP BN	1	45		2
PLT, CO D, 3D MED BN		5	1	17
DET, 3D DENT CO			1	1
DET, HQBN, 3D MARDIV	1	4		
LOGISTIC SUPPORT UNIT	1	38		
DET, 3D SERV BN				
DET, 3D FSR				
		13		
TOTALS	60	1292	5	69

SHIPPING

USS JUNEAU (LPD-10)
USS ST. LOUIS (LKA-116)
USS ALAMO (LSD-33)
USS WHITFIELD CTY (LST-1169)

AIRCRAFT

[redacted]

ARMS & EQUIPMENT

1 LVTP-5 CMD
10 LVTP-5
5 M48 TANKS
6 105 HOW TD
8 106MM RR
8 81MM MORTAR
33 TRUCK, UTILITY PLATFORM W/O 106 RR, M-274
30 TRUCK, UTILITY , M-151
4 TRUCK, VAN MRC-109
2 TRUCK, UTILITY M-123
2 TRUCK, UTILITY M-124
1 TRUCK, AMBULANCE M-718
2 TRUCK, AMBULANCE M-43
16 TRUCK, CARGO 2½T M-35
4 TRUCK, CARGO 3/4T M-37
2 TRUCK, TANK M-49
2 TRUCK, DUMP 5T M-51
14 TRUCK, CARGO 5T M-54
1 TRUCK, WRECKER 5T M-543
4 TRAILER, CARGO M-101
6 TRAILER, CARGO 3/4T M-101A1
15 TRAILER, CARGO M-105
4 TRAILER, TANK WATER M-149
27 TRAILER, CARGO M-416
1 30 KW GENERATOR
1 GENERATOR SET PU-720G
1 GENERATOR SET TRAILER MOUNTED PU-692G
1 BATH UNIT
1 WATER PURIFICATION UNIT
2 CONEX BOX
1 STEAM CLEANER

UNCLASSIFIED

Unclassified

* SEE TAB 31 FOR PRESENT LOCATION

TAB 34

[redacted]

UNCLASSIFIED

Department of Defense

NUMBER OF CASUALTIES INCURRED BY U. S. MILITARY PERSONNEL
IN CONNECTION WITH THE CONFLICT IN VIET-NAM

Cumulative from January 1, 1961 through July 24, 1971

4 AUGUST 1971

	Army	Navy *	Marine Corps	Air Force	Total
A. CASUALTIES RESULTING FROM ACTIONS BY HOSTILE FORCES					
1. Killed	25,085	1,050	11,465	455	38,055
2. Wounded or Injured					
a. Died of wounds	3,484	140	1,449	44	5,117
b. Nonfatal wounds					
Hospital care required	95,786	4,080	51,356	804	152,026
Hospital care not required	103,728	5,832	37,161	2,293	149,014
3. Missing					
a. Died while missing	1,627	182	5	392	2,206
b. Returned to control	48	7	6	26	87
c. Current missing	261	113	81	558	1,013
4. Captured or Interned					
a. Died while captured or interned	15	-	3	1	19
b. Returned to control	56	3	5	6	70
c. Current captured or interned	62	144	23	236	465
5. Deaths					
a. From aircraft accidents/incidents					
Fixed Wing	88	155	139	692	1,074
Helicopter	2,207	62	429	59	2,757
b. From ground action	27,916	1,155	12,354	141	41,566
TOTAL DEATHS a/	30,211	1,372	12,922	892	45,397
B. CASUALTIES NOT THE RESULT OF ACTIONS BY HOSTILE FORCES					
6. Current Missing	132	-	12	-	144
7. Deaths					
a. From aircraft accidents/incidents					
Fixed Wing	248	172	45	277	742
Helicopter	1,692	52	242	18	2,004
b. From other causes	4,679	604	1,391	260	6,934
TOTAL DEATHS	6,619	828	1,678	555	9,680

a/ Sum of lines 1, 2a, 3a and 4a.

*Navy figures include a small number of Coast Guard casualties.

Department of Defense
OASD (Comptroller)
Directorate for Information Operations
July 28, 1971

TAB 45-2

UNCLASSIFIED

Unclassified

COMPARATIVE USMC/ENEMY KIA

4 AUGUST 1971

1969

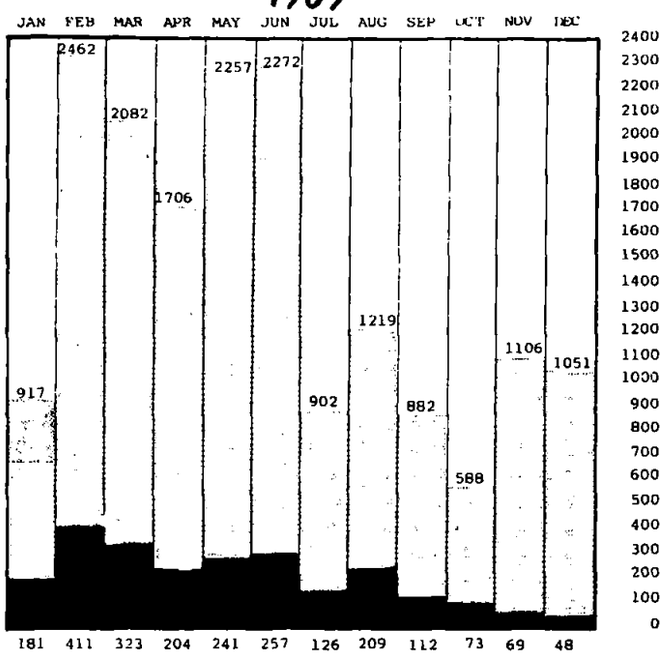

1969 USMC	1969 ENEMY	
181	917	JAN
411	2462	FEB
323	2082	MAR
204	1706	APR
241	2257	MAY
257	2272	JUN
126	902	JUL
209	1219	AUG
112	882	SEP
73	588	OCT
69	1106	NOV
48	1051	DEC
2,254	17,444	

1971

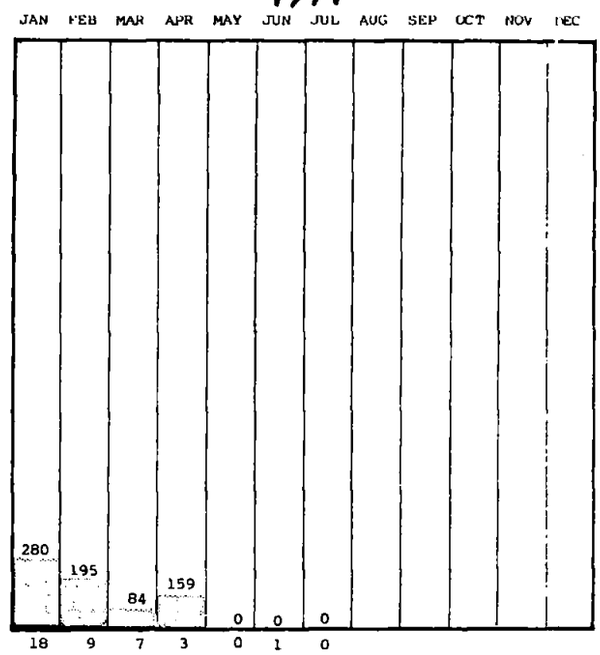

1970 USMC	1970 ENEMY	
59	1027	JAN
91	898	FEB
62	491	MAR
53	732	APR
42	780	MAY
61	693	JUN
32	524	JUL
41	313	AUG
31	191	SEP
20	169	OCT
30	156	NOV
11	198	DEC
533	6,172	

1971 USMC	1971 ENEMY	
18	280	JAN
9	195	FEB
7	84	MAR
3	159	APR
0	0	MAY
1	0	JUN
0	0	JUL
		AUG
		SEP
		OCT
		NOV
		DEC

1970

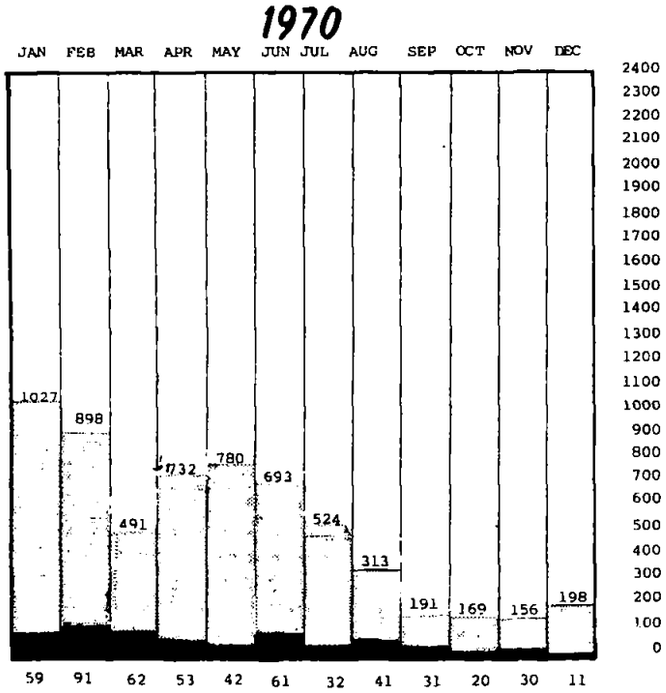

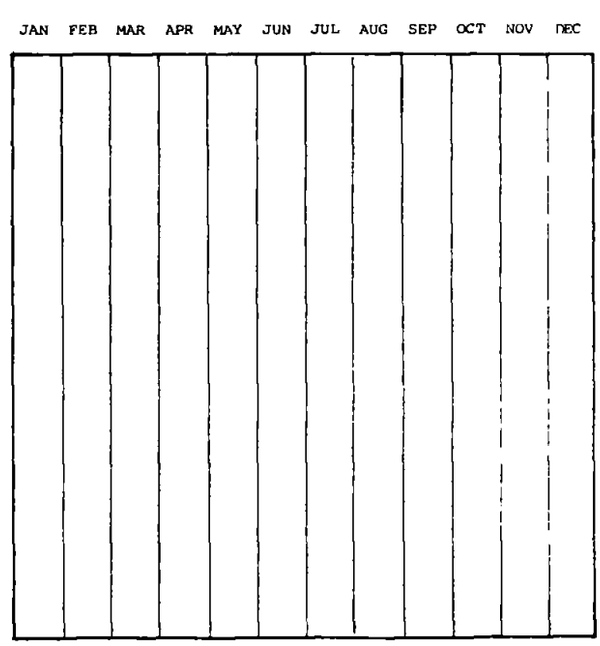

Unclassified

UNCLASSIFIED

MARINE CORPS COMMAND CENTER

4 AUGUST 1971

DISPOSITION AND STRENGTH OF MAJOR US AND FW FORCES IN RVN

DISPOSITION

MR RECAP

MR I*	XXIV CORPS
220 MILES LENGTH@	30-75 MILES WIDTH
14,600 SQ MI AREA	2,860,300 CIV POP
	101ST ABN DIV (AM)
USA 21 BNs	1STBDE 5TH INF DIV (MECH)
ARVN 36 BNs	23D INF DIV (AMERICAL)
ROKMC 4 BNs	2D ROKMC BDE
VNMC 5 BNs	147TH VNMC BDE
ARVN CAV 4 BNs	258TH VNMC BDE
TOTAL 70 BNs	1ST ARVN DIV
	2D ARVN DIV

MR II*	SRAG (NHA TRANG)
315 MILES LENGTH@	45-130 MILES WIDTH
31,300 SQ MI AREA	2,898,200 CIV POP
USA 4 BNs	173D ABN BDE
ARVN 31 BNs	ROK CAP INF DIV
ROK 18 BNs	9TH ROK DIV
ARVN CAV 3	22D ARVN DIV
TOTAL 56 BNs	23D ARVN DIV

MR III*	TRAC (LONG BINH)
90 MILES LENGTH@	55-115 MILES WIDTH
10,100 SQ MI AREA	5,133,000 CIV POP
USA 5 BNs	2D BDE, 25TH INF DIV
ARVN 55 BNs	1ST AUSTRALIAN TF
AUSTRALIA 2 BNs	ROYAL THAI VOL REGT
THAILAND 5 BNs	1ST CAV DIV (AM)
ARVN CAV 5 BNs	5TH ARVN DIV
VNMC 4 BNs	18TH ARVN DIV
	25TH ARVN DIV
TOTAL 76 BNs	369TH VNMC BDE
	1ST ARVN ABN DIV

MR IV*	DRAC (CAN THO)
195 MILES LENGTH@	35-115 MILES WIDTH
14,600 SQ MI AREA	5,700,1000 CIV POP
ARVN 41 BNs	7TH ARVN DIV
ARVN CAV 5 BNs	9TH ARVN DIV
	21ST ARVN DIV
TOTAL 46 BNs	

@ Coastal Arc
# Includes 3 RGR Bns
* See RVN Recap note

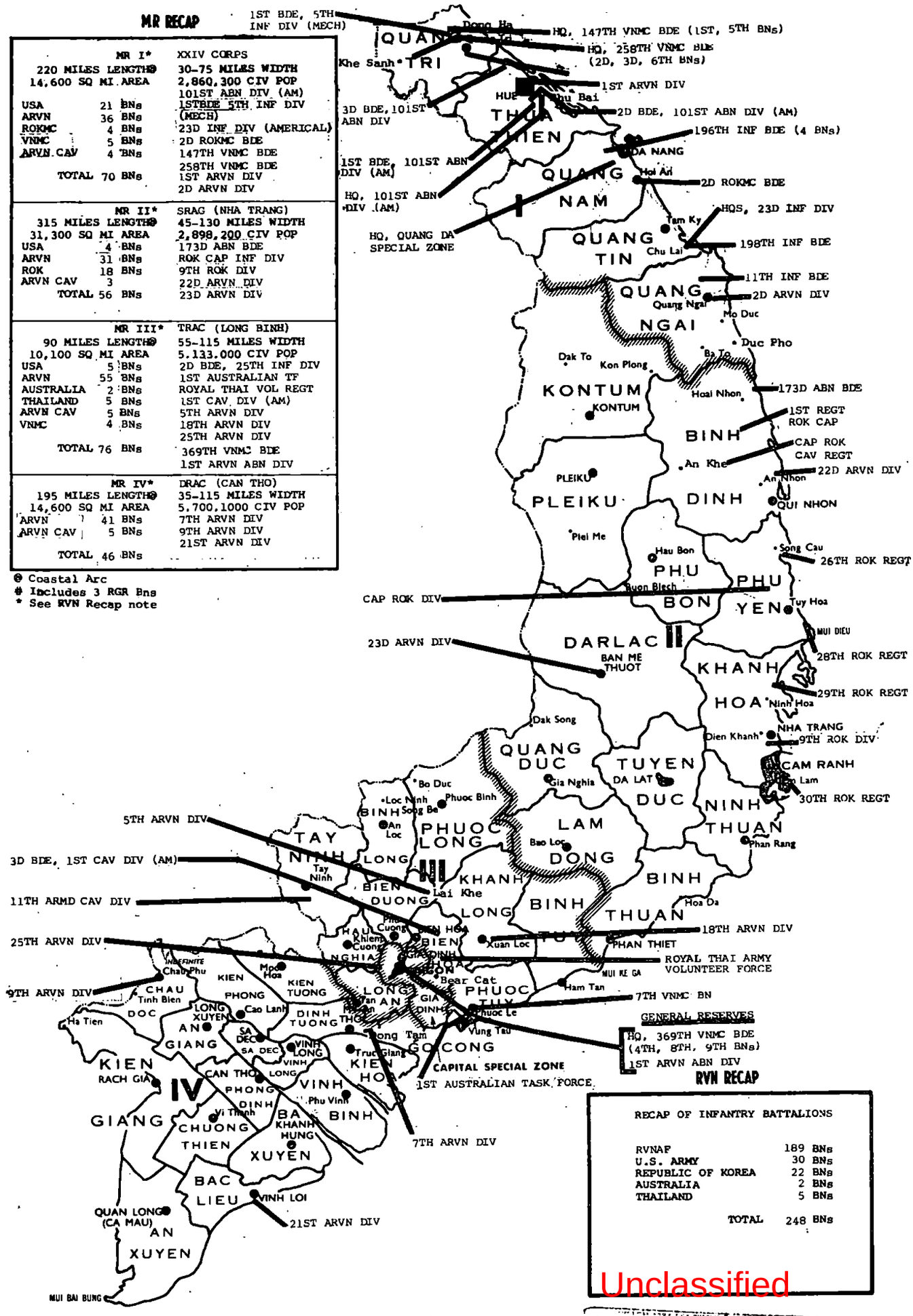

RVN RECAP

RECAP OF INFANTRY BATTALIONS	
RVNAF	189 BNs
U.S. ARMY	30 BNs
REPUBLIC OF KOREA	22 BNs
AUSTRALIA	2 BNs
THAILAND	5 BNs
TOTAL	248 BNs

Unclassified

TAB 46-1

UNCLASSIFIED

UNCLASSIFIED

[redacted]

MARINE CORPS COMMAND CENTER

STRENGTHS*

RVN ARMED FORCES (RVNAF) — 4 AUGUST 1971

ARMY (ARVN)	412,705
NAVY (VNN)	41,184
AIR FORCE (VNAF)	50,245
MARINE CORPS (VNMC)	13,806
REGIONAL FORCES (RF)	295,019
POPULAR FORCES (PF)	247,638
TOTAL RVNAF	1,060,597

UNITED STATES FORCES

ARMY	179,006
NAVY	10,438
AIR FORCE	36,255
MARINE CORPS	569
COAST GUARD	99
TOTAL U.S.	226,367

FREE WORLD MILITARY ASSISTANCE FORCES (FWMAF)

REPUBLIC OF KOREA	48,645
AUSTRALIA	6,271
PHILIPPINES	83
THAILAND	9,517
NEW ZEALAND	273
REPUBLIC OF CHINA	31
SPAIN	7
TOTAL FWMAF	64,827

TOTAL FORCES IN RVN 1,351,791

★ SOURCE: RVNAF – MACV MONTHLY RPT OF GVN STRENGTH AS OF 31MAY71.
ALL OTHERS – MACV WEEKLY STRENGTH RPT AS OF 2400, 29JUL71.

Unclassified

UNCLASSIFIED

TAB 46-2

[redacted]

UNCLASSIFIED

MARINE CORPS COMMAND CENTER

TABLE OF CONTENTS

11 AUGUST 1971

SECTION I - MARINE CORPS FORCES - WORLD WIDE	LIST OF EFFECTIVE TABS	DATE OF LATEST CHANGE
ALLOCATION OF MARINE CORPS PERSONNEL	11	28JUL71
SELECTED PERSONNEL AND AIRCRAFT DATA	12	11AUG71 ●
UNITED STATES MARINE CORPS RESERVE	13-1	30DEC70
	13-2	23DEC70
	13-3	4AUG71
	13-4	23DEC70
MISCELLANEOUS NON-FMF UNITS	14-1	14JUL71
(MARINE BARRACKS)	14-2	30JUN71
(MARINE SECURITY GUARD BATTALION)	14-3	14APR71
(MARINE DETACHMENTS AFLOAT)	14-4	14APR71
	14-5	30JUN71
SECTION II - STATUS OF FLEET MARINE FORCES		
STATUS OF FMF UNITS	21-1	11AUG71 ●
	21-2	11AUG71 ●
	21-3	11AUG71 ●
	21-4	11AUG71 ●
	21-5	11AUG71 ●
	21-6	11AUG71 ●
	21-7	11AUG71 ●
	21-8	11AUG71 ●
	21-9	11AUG71 ●
RECAPITULATION OF FMF ACTUAL STRENGTHS	22	11AUG71 ●
DISTRIBUTION OF MAJOR GROUND EQUIPMENT AND AIRCRAFT	23	11AUG71 ●
SECTION III - DISPOSITION OF FLEET MARINE FORCE UNITS		
FLEET MARINE FORCE DISPOSITION, DISTRIBUTION BY BATTALION/ SQUADRON AND MOVEMENTS	31-1	11AUG71 ●
	31-2	11AUG71 ●
FMF PACIFIC UNIT LOCATIONS AND STRENGTHS (MIDPAC/EASTPAC)	32	11AUG71 ●
FMF PACIFIC UNIT LOCATIONS, STRENGTHS AND OSD CEILING CONSIDERATIONS (WESTPAC)	33	11AUG71 ●
LANDING FORCES - 7TH FLEET	34	11AUG71 ●
FMF ATLANTIC UNIT LOCATIONS AND STRENGTHS	35	11AUG71 ●
LANDING FORCES - MEDITERRANEAN AND CARIBBEAN	36-1	11AUG71 ●
GUANTANAMO BAY BATTALION	36-2	11AUG71 ●
SECTION IV - GENERAL		
CHRONOLOGY OF SIGNIFICANT EVENTS	41-1	17MAR71
	41-2	21APR71
	41-3	23JUN71
	41-4	16JUN71
	41-5	28JUL71
STATISTICAL SUMMARY OF III MAF OFFENSIVE OPERATIONS IN VIETNAM	42-1	21APR71
	42-2	18NOV70
	42-3	18NOV70
	42-4	10MAR71
	42-5	12MAY71
	42-6	12MAY71
LANDING FORCES - 7TH FLEET; SUMMARY OF OPERATIONS IN RVN	43-1	18NOV70
	43-2	18NOV70
	43-3	18NOV70
U.S. MARINE CORPS AIRCRAFT LOSSES IN SEASIA	44-1	18NOV70
	44-2	18NOV70
	44-3	18NOV70
	44-4	18NOV70
	44-5	18NOV70
	44-6	18NOV70
	44-7	18NOV70
	44-8	18NOV70
	44-9	25NOV70
	44-10	5MAY71
	44-11	5MAY71
USMC/ENEMY CASUALTIES IN RVN; CUMULATIVE DOD CASUALTY FIGURES ON U.S. MILITARY PERSONNEL AND COMPARATIVE USMC/ENEMY KIA IN CONNECTION WITH THE CONFLICT IN RVN	45-1	28JUL71
	45-2	11AUG71 ●
	45-3	26MAY71
	45-4	4AUG71
DISPOSITION AND STRENGTH OF MAJOR U.S. AND FW FORCES IN RVN	46-1	11AUG71 ●
	46-2	11AUG71 ●
COMUSMACV STAFF, PRINCIPAL MARINE OFFICERS HQ MACV	47	7JUL71
REPUBLIC OF KOREA MARINE CORPS	48-1	11AUG71 ●
REPUBLIC OF VIETNAM MARINE CORPS	48-2	7JUL71
VIETNAM GEOGRAPHIC AND CLIMATE DATA	49-1	18NOV70
	49-2	18NOV70
CHRONOLOGY OF FMF DEPLOYMENT AND STRENGTH IN RVN	410-1	20JAN71
	410-2	25NOV70
	410-3	25NOV70
	410-4	25NOV70
	410-5	25NOV70
	410-6	25NOV70
	410-7	9DEC70
	410-8	10MAR71
	410-9	19MAY71
	410-10	23JUN71
	410-11	21JUL71
	410-12	21JUL71

Unclassified

CONTENTS OF THIS PUBLICATION
DOWNGRADED AT 3 YEAR
INTERVALS
DECLASSIFIED AFTER 12 YEARS
DOD DIR 5200.10

UNCLASSIFIED

MARINE CORPS
AUG 13 1971
REFERENCE BRANCH

Unclassified

[redacted]

UNCLASSIFIED

MARINE CORPS COMMAND CENTER

SELECTED PERSONNEL AND AIRCRAFT DATA

PERSONNEL

11 AUGUST 1971

		STRENGTH	PERCENT USMC	PERCENT FMF	PERCENT FMFPAC
USMC TOTAL	*	212,339	100.00		
FLEET MARINE FORCES		98,835	46.55	100.00	
FMF ATLANTIC	#	38,064	17.93	38.51	
FMF PACIFIC	#	60,771	28.62	61.49	
VIETNAM	¢	547	00.26		

SOURCE: * HQMC 1080-20 (ESTIMATED PERSONNEL DATA) AS OF 29JUN71.
MARES FORSTAT REPORT DATED 2AUG71.
¢ MACV WEEKLY STRENGTH REPORT AS OF 5AUG71.

AIRCRAFT

11 AUGUST 1971

		FIXW	HELO	TOTAL	PERCENT USMC	PERCENT FMF	PERCENT FMFPAC
USMC TOTALS	**	771	607	1,378	100.00		
FLEET MARINE FORCES	@	695	566	1,261	91.51	100.00	
FMF ATLANTIC	@	324	275	599	43.47	47.50	
FMF PACIFIC	@	371	291	662	48.04	52.50	

SOURCE: ** DC/S AIR STATUS BOARD PHOTO AS OF 10AUG71.
@ MARES FORSTAT REPORT DATED 2AUG71.

UNCLASSIFIED

TAB 12

Unclassified [redacted]

[redacted] UNCLASSIFIED

MARINE CORPS COMMAND CENTER

STATUS OF FMF UNITS **

11 AUGUST 1971

UNIT *	NOTE	UNIT COMMANDER	LOCATION	STRENGTH USMC	STRENGTH USN	UNIT READINESS☆ CURRENT RATE	RSN	P	S	R	T	EXPECTED RATE	EXPECTED BY	MAJOR EQUIPMENT
				98835	3052									
MIDPAC				5654	167									
FMFPAC		LTGEN A. K. JONES	HAWAII	60771	2019	C1		1	1	1	1			
HQ FMFPAC				1060	35									
HQSBN		COL R. T. TAUFFER	CP SMITH	997	27	C1		1	1	1	1			
DET 2, 21ST DENTAL CO (-)		CAPT M. R. HAMILTON (USN)			8	C1		1	1	1	1			
HQ SODN		LTCOL C. E. DORFFELD	KANEOHE	63		C4	P	4	1	1	1	C4	710731	5/T-28B, 2/UH-34D, 1/US-2B, 1/VH-34D
1ST ANGLICO (-)		MAJ J. H. LEONARD	SDIEGO	153	3	C3	S	2	3	2	3	C2	710831	
SU 1, 1ST ANGLICO (MACV)	*	LTCOL E. E. SHOULTS	SAIGON	168	10	C1		1	1	1	1			
1ST RADIO BN		LTCOL R. D. RESNICK	KANEOHE	400		C1		1	1	1	1			
1ST MARINE BRIGADE		BGEN V. A. ARMSTRONG	KANEOHE	3873	119	C4	P	4	2	2	3	C3	711031	
H&S CO		CAPT H. J. TRAUTWEIN JR.		242	15	C1		1	1	1	1			
1ST ITT		1STLT R. R. SCOTT		11		C1		1	1	1	1			
11TH CIT (CADRE) (FMFPAC)	*	CAPT K. W. CLEM				C4	N	5	5	5	5			
DET 1, 21ST DENTAL CO (-)		CDR J. D. CRAWFORD (USN)			13	C1		1	1	1	1			
3D MARINES (-) (REIN)		LTCOL J. P. CONNOLLY II	KANEOHE			C4	P	4	1	1	4	C3	711031	
HQCO (-)		CAPT E. P. MUSSETT JR.		66		C4	P	4	1	1	4	C3	711031	
1ST BN		MAJ P. J. KIESELBACH		807	53	C3	P	3	1	1	3	C2	711031	6/105 HOW TD, 8/106MM RR, 8/81 MORT
2D BN		MAJ F. W. BEEKMAN		4		C4	N	5	3	2	5	C3	711031	8/106MM RR, 8/81 MORT
CO A, 3D ENGR BN (-)		CAPT T. M. COOK		93		C3	P	3	2	2	2	C2	711031	
CO A (REIN), 3D MT BN (-)		1STLT R. S. DOLGERT		19		C4	P	4	1	1	4	C3	711031	
CO A (REIN), 3D SP BN (-) (CADRE)		CAPT R. F. BAKER		26		C4	P	4	1	1	4	C3	711031	
CO A, 3D RECON BN (-) (REIN) (CADRE)		CAPT P. M. KATANA		10		C4	P	4	1	1	4	C3	711031	
CO A (REIN), 3D MED BN (-) (CADRE)					4	C4	P	4	1	1	4	C3	711031	
1ST BN (-), 12TH MAR		MAJ L. E. KOLEBER	KANEOHE	101		C4	P	4	1	1	4	C3	711031	18/105 HOW TD
CO D, 3D AMTRAC BN (-)		CAPT K. R. BURNS		138		C4	P	4	1	2	4	C3	711001	3/LVTP-5 COMD, 44/LVTP-5, 1/LVTR
COMM SPT CO, 7TH COMM BN (-)		MAJ R. T. HIMMERICH		242		C3	R	3	2	3	2	C2	711230	
PROV SERV BN		LTCOL J. W. BROWN		220		C4	P	4	4	3	4	C3	711231	
MAG-24		COL R. E. CAREY	KANEOHE	1894	34	C3	X	4	2	3	4	C3	710915	
H&MS-24		LTCOL C. L. PHILLIPS		508		C4	S	2	4	4	2	C3	710901	1/C-117D, 5/CH-46A, 2/TA-4F
MABS-24		LTCOL W. R. LEDBETTER		338	34	C4	P	4	2	2	2	C3	710915	
MATCU-70		WO O. F. GOUR JR.		40		C4	P	4	2	1	4	C3	710801	
VMFA-122		LTCOL L. FURSTENBERG		170		C4	P	4	4	4	4	C3	711101	7/F-4B
VMFA-212		LTCOL R. D. REVIE		212		C3	X	4	1	3	3	C2	710704	13/F-4J
VMFA-235		MAJ G. H. LEACH		215		C3	X	4	1	1	4	C2	711231	16/F-4J
MACS-2		LTCOL P. L. ELLIOTT		168		C4	P	4	1	2	3	C3	711101	
HMM-262		MAJ C. M. LIVELY		130		C4	N	5	1	2	5			30/CH-46D
HMH-463		MAJ M. E. EDWARDS		113		C4	P	4	1	4	4	C3	711101	15/CH-53D
DET, VMO-6 (-)						C4	P	4	4	4	4	C3	711231	3/OV-10A
DET, HML-367 (-)						C4	P	4	1	1	4	C3	711231	8/UH-1E
WESTPAC				26580	986									
FMFPAC														
III MAF		LTGEN D. J. ROBERTSON	CP COURTNEY	26580	986									
H&SCO				131		C1		1	1	1	1			
3D MARDIV (-RREIN) (III MAF)	*	MAJGEN L. METZGER	CP COURTNEY	14431	780	C2	T	1	1	1	2	C2	720601	
HQBN		COL H.A.F.VONDERHEYDE		1683	46	C2	T	1	1	2	2	C2	720601	
3D ITT	22	WO T. F. SINGLEY	CP HANSEN											
7TH ITT	22	CAPT E. H. SIBLEY												
11TH ITT	22	1STLT M. C. MONAHAN												
15TH ITT	22	WO J. W. STANLEY												
17TH ITT	22	CAPT G. H. JOHNSON JR.												
SCAMP	22													
3D CIT		CAPT R. E. SHROYER		14		C1		1	1	1	1			
1ST SSGT		CAPT T. L. STROHECKER	CP COURTNEY	11		C3	S	1	3	1	1	C1	710805	
3D DENTAL CO		CAPT W. J. KENNEDY (USN)		4	66	C1		1	1	1	1			

*PARENTHETIC UNIT INDICATES OPCON WHEN DIFFERENT FROM ORGANIZATIONAL STRUCTURE.

Unclassified

[redacted] UNCLASSIFIED

TAB 21-1

[redacted] UNCLASSIFIED

MARINE CORPS COMMAND CENTER

STATUS OF FMF UNITS **

11 AUGUST 1971

UNIT *	NOTE	UNIT COMMANDER	LOCATION	STRENGTH USMC	STRENGTH USN	UNIT READINESS ☆ CURRENT RATE	RSN	P	S	R	T	EXPECTED RATE	BY	MAJOR EQUIPMENT
4TH MARINES	24	COL R. J. PERRICH	CP HANSEN			C2	T	2	1	1	2	C2	720601	
HQCO		CAPT S. M. HARTNETT		203	8	C2	T	1	1	1	2	C2	720601	
1STBN	1	LTCOL D. G. ROBISON		978	46	C2	P	2	1	1	2	C1	710825	8/106MM RR, 8/81 MORT
2DBN		LTCOL J. PHILLIPS		991	37	C2	R	2	1	2	2	C1	710930	8/106MM RR, 8/81 MORT
3DBN		LTCOL A. J. CASTELLANA		988	42	C2	P	2	1	1	2	C1	710930	8/106MM RR, 8/81 MORT
9TH MARINES		COL R. T. LAWRENCE	CP SCHWAB			C2	T	1	1	1	2	C1	710805	
HQCO		CAPT M. H. CRAFTON JR.		238	5	C2	R	1	1	2	2	C1	710930	
1STBN		LTCOL F.W.M.WOODROW JR.		1028	34	C2		2	1	2	1	C1	710915	8/106MM RR, 8/81 MORT
2DBN (31ST MAU)	2*	LTCOL F. J. JOHNSON JR.	31ST MAU	1060	40	C1		1	1	1	1			8/106MM RR, 8/81 MORT
3DBN		LTCOL B. S. SNELL	CP SCHWAB	976	40	C2	P	2	1	2	2	C1	711115	7/106MM RR, 8/81 MORT
12TH MARINES (-)		COL J. P. O'CONNELL	CP HANSEN			C2	T	2	1	1	2	C1	710805	
HQ BTRY (-)		CAPT D. J. LABOISSIERE		221	7	C2	R	1	1	2	2	C1	710905	
2DBN	7	LTCOL E. D. LITZENBERGER		516	16	C2	T	2	1	1	2	C2	711205	18/105 HOW TD
3DBN		LTCOL W. J. HALLISEY		467	15	C2	T	2	1	1	2	C2	711205	18/105 HOW TD
4THBN (-) (REIN)		LTCOL K. G. PATTERSON		479	12	C2	P	2	1	2	2	C2	711201	1/M51 VTR, 17/155 HOW SP
3D PLAT, 1ST 8" HOW BTRY	4													2/8" HOW SP
3D SERV BN (-)		COL D. J. HUNTER	CP HANSEN	769	27	C2	T	1	1	1	2	C1	710825	
3D TANK BN (-)	7	LTCOL C. R. STIFFLER		573	16	C2	T	2	1	1	2	C2	720601	53/M48 TANK, 5/M51 VTR 8/M67 TANK
9TH MT BN (-)		MAJ M. F. SCANLON		295	9	C2	T	1	1	1	2	C2	711114	
3D MED BN (-)		LTCOL F. E. CLARK JR.		137	199	C3	S	3	3	3	2	C2	711001	
1ST HOSPITAL CO (CAIRE)		LTJG J. W. VRABEL (USN)		23	23	C4	P	4	1	2	4	C4	711231	
3D MT BN (-)		MAJ B. L. PARKS	CP SCHWAB	133	6	C2	T	1	1	1	2	C2	720601	
3D RECON BN (-)	7	LTCOL T. R. STUART		362	24	C2	T	1	1	1	2	C1	711001	
3D ENGR BN (-) (REIN)	17	LTCOL C. R. GIBSON		684	8	C2	P	2	1	2	2	C1	711001	
CO D (REIN),7TH ENGR BN(-)		CAPT H. L. CAMPBELL	CP HAGUE	141		C3	P	3	2	2	2	C2	711201	
BRIDGE PLAT, 1ST BRIDGE CO		1STLT R. M. RAPP		18										
7TH COMM BN (-)		LTCOL M. W. MCCOURY	CP SCHWAB	463	8	C2	T	2	1	2	2	C2	720601	
3D SP BN (-)		LTCOL R. L. ANDERTON	CP HAGUE	380	36	C2	T	1	1	2	2	C2	720701	
1ST AMTRAC BN (-)		LTCOL J. G. BUCKHAN	CP SCHWAB	596	10	C2	P	2	2	2	2	C1	710905	3/LVTE-1, 9/LVTP-5 CMD, 76/LVTP-5, 3/LVTR
1ST MAW (III MAF)	*	MAJGEN R. G. OWENS JR.	IWAKUNI	8913	155	C2	R	2	2	2	2	C2	711001	
JAPAN (1ST MAW ELEMENTS)				5854	124									
MWHS-1		COL W. C. KELLY	IWAKUNI	819	22	C2	S	1	2	2	2	C1	710801	
7TH CIT (1ST MAW)	*	WO J. A. CANONICO		20		C1		1	1	1	1			
11TH FORCE DENTAL CO (-)		CDR J. J. LYONS (USN)		2	32	C1		1	1	1	1			
3D SSCT		CAPT G. G. MEYERS		10		C2	X	1	1	1	1	C1	710801	
MACG-18 (-)		COL E. M. JONES	IWAKUNI			C2	R	2	1	2	2	C2	711021	
H&HS-18 (-)		MAJ L. E. OBENHAUS		190		C2	R	2	2	2	2	C1	710901	
MASS-2 (-)		LTCOL T. G. DAVIS		184		C2	R	1	2	2	2	C1	711110	
MWCS-18		MAJ R. S. KAYE		292		C2	P	2	2	2	2	C2	711021	
MAG-12		COL E. J. BUTTY	IWAKUNI			C2	R	2	2	2	1	C2	711001	
HMS-12		LTCOL K. D. CURRY JR.		550		C2	R	1	1	2	2	C2	711020	
MABS-12		LTCOL J. L. DRIEFER		377	20	C2	R	2	1	2	2	C2	711031	
MATCU-62 (MAG-12)	*	CAPT A. E. PETERS		39		C4	P	4	1	1	2	C3	711001	
VMA-211		LTCOL D. G. GASCOIGNE		211	1	C2	R	2	2	2	1	C2	711030	19/A-4E
VMA-311		LTCOL K. L. BATT		186	1	C2	P	2	2	2	1	C2	711002	24/A-4E
VMA (AW)-533		LTCOL R. P. SPRIER		249		C2	R	2	1	2	1	C2	711001	12/A-6A
OTHER														
SU 2, H&MS-36			FUJI	7	17									3/CH-46D

* PARENTHETIC UNIT INDICATES OPCON WHEN DIFFERENT FROM ORGANIZATIONAL STRUCTURE.

Unclassified

TAB 21- 2

[redacted] UNCLASSIFIED

[redacted] UNCLASSIFIED

MARINE CORPS COMMAND CENTER

STATUS OF FMF UNITS **

11 AUGUST 1971

UNIT *	NOTE	UNIT COMMANDER	LOCATION	STRENGTH USMC	STRENGTH USN	UNIT READINESS ☆ CURRENT RATE	RSN	P	S	R	T	EXPECTED RATE	BY	MAJOR EQUIPMENT
MAG-15		COL R. R. MILLER	IWAKUNI			C2	T	2	2	2	2	C1	710915	
H&MS-15		MAJ M. P. CADY		554		C2	R	1	1	2	1	C1	711001	4/TA-4F
MABS-15		MAJ R. L. BECKWITH		368	21	C2	R	2	1	2	2	C2	710731	
MATCU-60 (MAG-15)	*	1STLT C. R. HICKEY		56		C2	P	2	1	1	2	C1	710801	
VMFA-115		LTCOL R. R. POWELL	CUBI PT.	289	1	C2	T	2	2	2	2	C2	711001	14/F-4B
VMFA-232		LTCOL J. S. ROSENTHAL	IWAKUNI	318	1	C2	T	2	1	2	2	C1	710815	16/F-4J
VMCJ-1 (1ST MAW)	*	LTCOL S. S. EISENHAUER		341	1	C3	X	2	1	2	4	C2	711006	6/EA-6A, 9/RF-4B
MWSG-17		COL W. G. MCCOOL	IWAKUNI			C3	R	1	2	3	2	C2	710801	
H&MS-17		LTCOL W. R. LIMBACH		568	7	C3	R	1	2	3	2	C2	710901	4/C-117D, 3/C-54Q/R/S
WERS-17 (-)		MAJ A. L. FRUCCI		224		C2	R	1	2	2	2	C1	710815	
OKINAWA (1ST MAW ELEMENTS)				3059	31									
MAG-36		COL R. J. ZITNIK	FUTENMA			C2	R	1	2	2	1	C2	710924	
H&MS-36 (-)		LTCOL D. A. SPURLOCK		576		C2	S	1	2	2	1	C1	710901	9/CH-46D, 6/UH-1E
SU 1, H&MS-36 (-)		MAJ F. W. CRONE		51		C2	R	1	1	2	1	C1	710911	4/AH-1J
MABS-36		LTCOL V. J. GUINEE JR.		521	24	C2	R	2	1	2	2	C1	710830	
MATCU-66 (MAG-36)	*	CAPT K. R. CLARK		56		C2	P	2	1	2	2	C2	710925	
MATCU-68 (MAG-36)	*	WO L. R. COXE		16		C4	P	4	2	2	4	C4	711015	
HMM-164 (31ST MAU)	2*	LTCOL A. J. KETTERING	31ST MAU	285	3	C2	R	1	2	2	1	C1	710815	13/CH-46D, 4/CH-53D, 4/UH-1E
HMM-165		LTCOL P. L. MOREAU	FUTENMA	254		C2	R	1	2	2	1	C1	710810	20/CH-46D
HMH-462 (-)	2	MAJ J. W. ROBERTS		262	1	C2	R	1	1	2	1	C1	710901	17/CH-53D
VMO-6 (-)	28	LTCOL J. L. NORTON		206		C2	R	1	2	2	1	C1	710901	11/OV-10A
VMGR-152 (1ST MAW)	*	LTCOL R. W. DUPHINEY		293	1	C4	R	2	4	4	3	C3	710831	6/KC-130F
HML-367 (-)		MAJ R. SANCHO		167		C1		1	1	1	1			12/UH-1E
OTHERS														
DET, MASS-2 (-)			FUTENMA											
SU 1, WERS-17 (-)	12	WO E. G. HICKS		51		C1		1	1	1	1			
SU 1, H&MS-12 (-)	27	CAPT J. A. MILLER	NAHA	49		C2	S	1	2	2	1	C1	710730	
MACS-4		LTCOL R. D. MILLER	FUTENMA	272	2	C3	T	2	1	2	3	C2	710923	
3D FSR		COL R. E. ROEDER JR.	CP FOSTER	3105	51	C3	S	2	3	3	2	C2	710915	
H&S BN		LTCOL J. B. HARRIS SR.		890	25	C3	R	2	3	3	2	C2	710915	
SUPPLY BN		LTCOL J. W. FRIBERG		1212	26	C3	S	2	3	2	2	C2	710915	
HOP, 3D FSR (3D FSR)	*	CAPT C. W. SHIVER		45		C1		1	1	1	1			
MAINT BN		LTCOL H. I. FREY		958		C3	S	2	3	3	2	C2	710915	2/LVTE-1, 1/106MM RR, 1/81 MORT
EASTPAC				28537	866									
FMFPAC														
I MAF		BGEN R. T. DMYER JR.	CAMPEN	21		C3	X	2	4	4	2	C2	710901	
1ST MAR DIV (-) (REIN)		BGEN R. T. DMYER JR.	CAMPEN	14348	524	C4	P	4	2	3	4	C4	711001	
HQBN		COL R. N. BURHANS		1735	60	C4	P	4	2	2	4	C4	711001	
1ST CIT		CAPT B. B. VORONIN		20		C1		1	1	1	1			
5TH ITT	14	CAPT R. A. KAROLY				C3	P	3	1	1	3	C3	710901	
9TH ITT	14	CAPT L. J. JANSEN				C1		1	1	1	1			
19TH ITT	14	1STLT G. D. JENNINGS				C4	P	4	1	1	4	C4	711101	
21ST ITT	14	2DLT M. M. LINCOLN				C4	P	4	1	1	4	C3	711001	
23D ITT	14	CAPT R. D. TOMLIN				C1		1	1	1	1			
25TH ITT	14	CAPT H. K. LEE				C4	P	4	1	1	4	C4	711001	
2D SSCT		WO E. L. HANEY		8		C4	R	1	1	4	1	C3	710901	
SCAMP		CAPT A. L. SELLECK JR.		24										
COMM SPT CO, 9TH COMM BN (-)		CAPT D. B. DOMTING		299		C2	R	1	1	2	1	C2	711001	
1ST CIVIL AFFAIRS GRP (CADRE)		CAPT R. S. GRISCHKOWSKY		23		C4	P	4	1	1	4	C4	711001	
1ST MARINES		LTCOL M. A. MOORE				C4	S	3	4	4	3	C3	711001	
HQCO		CAPT H. W. GARDNER		186	10	C3	S	2	3	3	2	C2	711101	
1ST BN		LTCOL C. A. BARSTOW		1258	10	C4	R	3	3	4	3	C3	711001	8/106MM RR, 8/81 MORT
2D BN		LTCOL A. LUKEMAN		1055	17	C4	S	2	4	3	2	C3	711001	8/106MM RR, 8/81 MORT
3D BN		LTCOL M. HUNTER		1048	27	C3	S	3	3	3	3	C2	711001	8/106MM RR, 8/81 MORT

* PARENTHETIC UNIT INDICATES OPCON WHEN DIFFERENT FROM ORGANIZATIONAL STRUCTURE.

Unclassified

[redacted] UNCLASSIFIED

TAB 21-3

[redacted] UNCLASSIFIED

MARINE CORPS COMMAND CENTER

STATUS OF FMF UNITS**

11 AUGUST 1971

UNIT *	NOTE	UNIT COMMANDER	LOCATION	STRENGTH USMC	STRENGTH USN	UNIT READINESS☆ CURRENT RATE	RSN	P	S	R	T	EXPECTED RATE	BY	MAJOR EQUIPMENT
3D BN, 3D MARINES (CADRE)		MAJ F. G. HUTCHINSON JR.	CAMPEN	112	2	C4	N	5	4	4	5			7/106MM RR
5TH MARINES		LTCOL M. J. HOCHENAUER	CAMPEN			C4	P	4	4	4	4	C4	711001	
HQCO		CAPT J. R. WILLIAMS		88	10	C4	P	4	4	3	4	C4	711001	
1ST BN		MAJ W. T. MACY		132	6	C4	P	4	4	4	4	C4	711001	1/106MM RR, 6/81 MORT
2D BN		MAJ J. A. LINNEMANN		198	4	C4	P	4	4	4	4	C4	711001	
3D BN		CAPT M. B. DARLING		139	7	C4	P	4	4	4	4	C4	711001	8/106MM RR
7TH MARINES		COL A. A. MONTI	CAMPEN			C3	P	3	1	2	3	C3	711001	
HQCO		1STLT P. E. MILLER		221	12	C2	S	1	2	2	1	C1	711001	
1ST BN (CADRE)		MAJ R. C. HALL		409	7	C4	N	5	3	3	5			8/106MM RR, 8/81 MORT
2D BN		LTCOL T. L. SULLIVAN		1134	44	C2	T	1	1	1	2	C1	711101	8/106MM RR, 7/81 MORT
3D BN	13	LTCOL R. J. MILLE		1104	41	C2	T	1	1	1	2	C1	710901	8/106MM RR, 8/81 MORT
11TH MARINES (-) (REIN)		COL W. R. GRUBAUGH	CAMPEN			C4	P	4	3	4	4	C4	711001	
HQ BTRY		1STLT W. T. WILLIAMS		183		C4	P	4	4	4	4	C4	711001	6/M-30 MORT
1ST BN		MAJ H. H. BROOKS III		627	1	C4	P	4	2	4	4	C4	711001	18/105 HOW TD
2D BN (CADRE)		CAPT R. D. FULCHER		217	2	C4	P	4	4	4	4	C4	711001	
3D BN		MAJ W. A. HALL		657	18	C2	T	1	1	1	2	C1	711001	18/105 HOW TD
1ST MP BN		MAJ W. J. MCCALLUM	CAMPEN	45		C4	N	5	5	5	5			3/81 MORT
1ST MT BN (REIN)		CAPT E. R. WHITING		306	5	C3	R	1	2	3	2	C2	711001	
CO B, 9TH MT BN (-)		CAPT R. F. WILLIAMS		77	1	C3	X	4	1	1	4	C2	710901	
1ST RECON BN		MAJ H. C. COOPER JR.		267	5	C4	P	4	2	3	4	C4	711001	
1ST FORCE RECON CO		CAPT D. L. COOK		71	3	C4	P	4	2	3	4	C4	711001	
1ST TANK BN (REIN)	18	MAJ G. E. BERBAUM		417	21	C4	P	4	2	2	4	C4	711001	5/M-51 VTR, 7/M-67 TANK, 15/M103 TANK, 25/M48 TANK
CO D, 3D TANK BN (-) (CADRE)														
1ST ENGR BN	26	MAJ J. T. SCHULTZ		480	6	C4	P	4	4	4	4	C4	711001	
7TH ENGR BN (-) (REIN)	11	MAJ C. N. WALL		382	14	C4	P	4	2	3	4	C4	711001	
1ST BRIDGE CO (-) (CADRE)		1STLT D. N. TAYLOR JR.		52		C4	P	4	1	4	4	C4	711001	
1ST SP BN	8	LTCOL T. F. GRAY		247	17	C4	P	4	1	2	4	C4	711001	
3D AMTRAC BN (-)	19	MAJ J. P. SENIK		368	17	C4	P	4	2	2	4	C4	711001	5/LVTE-1, 8/LVTP-5 COND, 70/LVTP-5, 3/LVTR
1ST SERV BN (REIN)	10	COL G. K. REID		732	33	C4	P	4	1	2	4	C4	711001	
1ST SEARCHLIGHT BTRY (CADRE)								5	5	5	5			
7TH SEP BULK FUEL CO (CADRE)								5	5	5	5			
1ST MED BN (-)		LCDR D.K. LIVINGSTON (USN)		44	82	C4	P	4	3	4	4	C4	711001	
1ST DENTAL CO		CAPT J. F. KING (USN)		3	42	C4	P	4	1	1	4	C4	711001	
FORCE TROOPS FMFPAC		BGEN P. G. GRAHAM	29 PALMS	1495	75	C4	X	4	2	3	3			
HQCO		MAJ E. L. ROTTSOLK		173	9	C1		1	1	1	1			
NOP, 1ST FSR		CAPT T. R. GERIES		49		C1		1	1	1	1			
9TH COMM BN (-)		LTCOL D. J. GARRET		376	12	C4	P	4	1	2	3	C3	710901	
13TH CIT (FORTRPS FMFPAC)	*	CAPT A. G. WILSON		16		C1		1	1	1	1			
21ST DENTAL CO (-)		CAPT G. W. WALTER (USN)		2	21	C4	S	1	4	4	1	C3	711001	
1ST FAG		LTCOL R. O. GILLICK	29 PALMS	19		C4	P	4	2	3	4	C3	710802	
HQ BTRY, 1ST FAG		1STLT G. R. MABRY		132	13	C2	T	1	1	2	2	C1	710802	
1ST 8" HOW BTRY SP (-)		CAPT J. P. FARRELL		136		C3	P	3	2	2	3	C3	710915	1/M-51 VTR, 4/8" HOW SP
1ST 175MM GUN BTRY SP		CAPT M. T. OWENS JR.		65		C4	P	4	1	3	4	C3	710802	1/M-51 VTR, 6/175 GUN SP
3D 175MM GUN BTRY SP		CAPT D. L. ROSENBERG		94		C4	P	4	3	4	4	C3	710802	1/M-51 VTR, 6/175 GUN SP
4TH BN, 11TH MAR (1ST FAG)	*	LTCOL D. W. SANFORD		304	2	C4	P	4	2	3	4	C3	710915	1/M-51 VTR, 18/155 HOW SP
CO A (REIN), 7TH ENGR BN(-)		CAPT P. A. PANKEY	29 PALMS	107		C4	P	4	1	2	3	C3	710802	
3D HOSPITAL CO (CADRE)		LT W. L. NICHOLS (USN)		22	18	C4	X	4	4	3	4			

*PARENTHETIC UNIT INDICATES OPCON WHEN DIFFERENT FROM ORGANIZATIONAL STRUCTURE.

Unclassified

TAB 21-4

[redacted] UNCLASSIFIED

UNCLASSIFIED

MARINE CORPS COMMAND CENTER

STATUS OF FMF UNITS **

11 AUGUST 1971

UNIT *	NOTE	UNIT COMMANDER	LOCATION	STRENGTH USMC	STRENGTH USN	UNIT READINESS ☆ CURRENT RATE	RSN	P	S	R	T	EXPECTED RATE	EXPECTED BY	MAJOR EQUIPMENT
3D MAW		BGEN L. E. BROWN	EL TORO	11109	223	C3	T	3	2	3	3	C2	711030	
MWHS-3		MAJ P. J. VOGEL		688	122	C1		1	1	1	1			
6TH CIT		CAPT W. C. HOWEY		14		C1		1	1	1	1			
4TH SSCT		CAPT H. G. WHITE		9		C1		1	1	1	1			
13TH FORCE DENTAL CO		CAPT J. R. EVANS (USN)	EL TORO		40	C4	P	4	1	1	1	C3	710915	
MWSG-37		LTCOL F. R. SMOKE	EL TORO			C3	X	4	3	3	3	C2	711001	
H&MS-37 (-)		MAJ L. K. WARN		507	1	C3	P	3	2	2	2	C3	720101	5/C-117D, 1/C-54Q
SU 1, H&MS-37 (-)		MAJ L. C. WALLACE JR.		51		C2	P	2	1	1	1	C1	720101	
WERS-37		LTCOL M. PALLAI		213		C3	P	3	2	2	2	C3	720101	
VMGR-352 (3D MAW)	*	LTCOL G. L. CARLSON		251	1	C3	X	4	3	4	4	C3	720101	8/KC-130F
MACG-38		COL J. W. DRURY	EL TORO			C2	S	2	2	2	2	C1	711030	
H&HS-38		MAJ D. E. T. WILSON		310		C2	R	1	2	2	2	C1	710930	
1ST REDEYE PLAT		1STLT K. E. ROWE		38		C2	R	2	1	2	1	C1	710801	
3D REDEYE PLAT		1STLT J. B. DOWLING		34		C2	R	2	1	2	1	C1	710801	
2D LAAM BN		LTCOL R. D. FOSTER	YUMA	641	5	C2	X	3	1	2	2	C1	710801	
MACS-7		LTCOL J. O. GREGERSON	CAMPEN	186	2	C2	X	3	1	2	2	C2	711001	
MACS-1 (-)		MAJ W. H. ALLEN	YUMA	198	2	C3	T	2	2	2	3	C2	710901	
SU 1, MACS-1 (-) (NWU)		CAPT H. POSTHUMA		65		C1		1	1	1	1			
MWCS-38		MAJ W. T. CHWATEK	EL TORO	242		C4	P	4	3	3	1	C3	710930	
MASS-3		MAJ V. J. FULLADOSA		165		C3	P	3	1	3	3	C2	711030	
MAG-11		COL L. J. STIEN	EL TORO			C4	P	4	4	4	4	C3	710730	
H&MS-11		LTCOL H. N. LEVIN		356	1	C4	P	4	4	4	4	C3	710730	2/C-117D, 4/OV-10A, 3/TA-4F
MABS-11		MAJ N. E. DOUGLAS		307	16	C4	P	4	4	4	4	C3	710730	
VMFA-314		MAJ A. J. BARTEL		36		C4	N	5	4	4	5			
VMFA-323		MAJ T. G. LEACH		201		C4	P	4	1	3	4	C3	710930	15/F-4B
VMFA-334		CAPT S. P. HUEY		2		C4	N	4	4	4	4			
VMFA-531		LTCOL R. HUTCHINSON		240		C2	X	3	2	1	3	C2	710930	14/F-4B
MAG-13		COL D. R. DAVIS	EL TORO			C4	T	4	3	4	4	C3	710930	
H&MS-13		LTCOL C. C. NEWMARK		692	1	C2	P	2	1	1	2	C1	710930	13/A-6A, 8/F-4B, 5/TA-4F
MABS-13		MAJ J. DERMODY		510	2	C2	P	2	2	1	1	C2	710930	
MATCU-65 (MAG-13)	*	CAPT D. M. TARBET	YUMA	40		C3	X	4	1	1	3	C4	711001	
MATCU-67 (MAG-13)	*	1STLT J. HANCOCK	EL TORO	22		C4	P	4	1	4	4	C3	710930	
MATCU-77 (CADRE) (MAG-13)	*							5	5	5	5			
VMA-214		LTCOL J. J. MCCARTHY		177		C2	X	3	2	2	3	C2	711030	16/A-4F
VMA-223		MAJ A. OSEGUERA		174		C4	P	4	3	4	3	C3	711231	14/A-4F
VMA(AW)-225		LTCOL J. A. MANZIONE JR.		51		C4	N	5	4	4	5			
VMA(AW)-242		LTCOL M. S. NEWBILL		189	1	C4	R	3	3	4	3	C3	711013	6/A-6A
VMCJ-3		LTCOL M. W. DINNAGE		297	1	C4	P	4	1	2	3	C3	710930	10/RF-4B, 2/EA-6A
MAG-16		COL G. L. LILLICH	SANTA ANA			C3	P	3	2	2	2	C2	710930	
H&MS-16 (-)		MAJ J. G. MILLS		370		C2	P	2	2	2	2	C2	710930	18/CH-46D, 13/CH-53A, 6/UH-1E, 7/OV-10A
SU 1, H&MS-16 (-)		MAJ G. W. LEE	CAMPEN	131		C1		1	1	1	1			
MABS-16		MAJ B. G. WILKISON	SANTA ANA	655		C4	P	4	2	2	2	C2	710930	
MATCU-74 (H&MS-16 (-))	*	CAPT G. V. BROWN		47		C4	P	4	1	1	2	C3	710801	
MATCU-75 (H&MS-16 (-))	*	1STLT P. D. HAYNES	CAMPEN	30		C4	P	4	2	2	3	C3	710930	
HML-267		LTCOL J. M. MORIARTY		326	10	C3	R	2	1	3	2	C2	710930	21/UH-1E, 11/OV-10A
VMO-2		MAJ D. A. CAYLOR		2		C4	N	5	4	4	5	C3	711130	
HMM-161		LTCOL B. T. LADD	SANTA ANA	187		C3	P	3	2	2	2	C2	710930	20/CH-46D
HMM-163		LTCOL F. A. MATHEWS		198	1	C2	P	2	1	1	1	C1	710910	21/CH-46F
HMH-361		MAJ R. F. CAPTOR		149		C4	P	4	3	4	4	C3	710930	12/CH-53A
HMH-363		LTCOL A. F. RIBBECK		180		C2	X	3	3	2	3	C2	710930	18/CH-53A

* PARENTHETIC UNIT INDICATES OPCON WHEN DIFFERENT FROM ORGANIZATIONAL STRUCTURE.

Unclassified

TAB 21-5

UNCLASSIFIED

[redacted] UNCLASSIFIED

MARINE CORPS COMMAND CENTER

STATUS OF FMF UNITS**

11 AUGUST 1971

UNIT *	NOTE	UNIT COMMANDER	LOCATION	STRENGTH USMC	STRENGTH USN	UNIT READINESS ☆ CURRENT RATE	RSN	P	S	R	T	EXPECTED RATE	EXPECTED BY	MAJOR EQUIPMENT
MHTG-30		COL R. BIANCHI	SANTA ANA			C2	R	1	1	2	1	C1	710901	
H&MS-30		MAJ D. G. DUNLAP		290	1	C1		1	1	1	1			4/CH-46F, 2/CH-53A
HMMT-301		MAJ D. A. DALRYMPLE		171		C2	P	2	2	1	1	C1	710901	8/CH-53A
HMMT-302		LTCOL R. G. RITCHIE		186		C1		1	1	1	1			16/CH-46F
MCCRTG-10		COL R. B. SINCLAIR	YUMA			C2	P	1	2	2	1	C2	711130	
H&MS-10		MAJ J. R. CALLISON		424	6	C1		1	1	1	1			
VMFAT-101		LTCOL T. R. MOORE		375	4	C2	P	2	2	2	2	C1	711231	19/F-4B
VMAT-102		LTCOL R. D. REID		270	1	C3	P	3	2	2	1	C2	711031	25/A-4E
VMT-103		MAJ B. H. FREEMAN		212	3	C2	R	1	2	2	1	C1	710930	14/TA-4F, 4/TA-4J
1ST FSR		COL H. C. REED	CAMPEN	1564	44	C3	P	3	2	2	3	C2	711001	
H&SBN		MAJ R. E. JOHNSON		408	23	C3	P	3	2	2	3	C2	711001	
SUPPLY BN		MAJ R. J. WEBB		633	21	C2	P	2	2	2	2	C1	711001	
MAINT BN		MAJ A. A. MCVITTY		523		C3	P	3	2	2	3	C2	711001	
EAST COAST:														
FMFLANT:		LTGEN E. E. ANDERSON	NORFOLK	38064	1032	C1		1	1	1	1			
HQ FMFLANT				806	4									
H&SBN		COL L. H. EVINE		726	4	C2	P	2	1	1	2	C1	711001	
HQ SQDN		LTCOL D. PRUDHOMME		80		C2	X	4	2	1	1	C1	710901	1/C-131F, 1/C-54T, 2/T-28B, 1/UH-34D, 1/US-2A, 2/US-2B
2D MAR DIV		BGEN R. D. BOHN	CAMLEJ	15562	644	C2	P	2	1	1	2	C3	710930	
HQBN		COL G. R. HERSHEY		1812	35	C2	R	1	1	2	1	C1	710831	
2D ITT	20	MSGT R. L. GONYO												
4TH ITT	20	WO G. L. ANDERSON												
6TH ITT	20	2DLT R. L. LAMBERT												
SCAMP	20													
2D MARINES		COL C. B. REDMAN	CAMLEJ			C2	P	2	1	1	2	C1	710831	
HQCO		CAPT G. W. SCHLITZ		262	5	C1		1	1	1	1			
1ST BN		LTCOL A. M. GRAY		1087	31	C3	T	1	1	1	3	C2	710830	8/106MM RR, 8/81 MORT
2D BN	13/15	LTCOL M. ROJO JR.		945	19	C3	P	3	1	1	3	C2	710930	8/106MM RR, 8/81 MORT
3D BN (-) (32D MAU)	5*	LTCOL T. J. WILLIS	MED	945	33	C1		1	1	1	1			8/106MM RR, 8/81 MORT
SU 1, H&SCO, 3D BN (2D MAR)	*	1STLT J. R. LOMEY	CAMLEJ	22		C4	N	5	5	5	5			
6TH MARINES		COL F. R. KRAINCE	CAMLEJ			C2	P	2	1	1	2	C1	710831	
HQCO		CAPT R. J. SNOWDEN		264	6	C1		1	1	1	1			
1ST BN	6	LTCOL T. F. QUALLS		921	33	C2	P	2	1	1	1	C1	710930	6/106MM RR, 6/81 MORT
2D BN		MAJ J. F. DELANEY		994	20	C2	P	2	1	1	2	C1	710831	8/106MM RR, 8/81 MORT
3D BN		MAJ S. B. WANNER		913	31	C3	P	3	1	1	1	C2	710930	8/106MM RR, 8/81 MORT
8TH MARINES		COL E. M. YOUNG	CAMLEJ			C2	P	2	1	1	1	C1	710930	
HQCO		1STLT H. L. SAWYER		231	14	C1		1	1	1	1			
1ST BN		LTCOL M. H. IVINS		854	21	C2	P	2	1	1	2	C1	711031	8/106MM RR, 8/81 MORT
2D BN (-)	9	LTCOL D. O. PAREDES	GTMO	707	22	C2	P	2	1	1	1	C1	710930	8/106MM RR, 8/81 MORT
CO E, 2D BN		CAPT C. O. KELLER	CAMLEJ	293	2	C4	N	5	5	5	5			
3D BN		MAJ J. T. BOWLIN		877	20	C3	P	3	1	1	1	C2	710930	8/106MM RR, 8/81 MORT
10TH MARINES		COL C. R. BURROUGHS	CAMLEJ			C4	P	4	1	1	2	C3	710930	
HQ BTRY		1STLT R. R. HARRIS		246	6	C1		1	1	1	1			
1ST BN		LTCOL J. A. LIVINGSTONE		420	10	C4	P	4	1	1	2	C3	710930	18/105 HOW TD
2D BN		MAJ J. W. ROSS		375	10	C4	P	4	1	1	2	C3	710930	18/105 HOW TD
3D BN		LTCOL R. F. MOODY		366	10	C4	P	4	1	1	2	C3	710930	18/105 HOW TD
4TH BN		LTCOL R. F. BELLI		281	7	C4	P	4	1	1	2	C3	710930	1/M-51 VTR, 18/185 HOW SP

* PARENTHETIC UNIT INDICATES OPCON WHEN DIFFERENT FROM ORGANIZATIONAL STRUCTURE.

Unclassified

UNCLASSIFIED [redacted]

TAB 21-6

UNCLASSIFIED
S[redacted]

MARINE CORPS COMMAND CENTER

STATUS OF FMF UNITS **

11 AUGUST 1971

UNIT *	NOTE	UNIT COMMANDER	LOCATION	STRENGTH USMC	STRENGTH USN	UNIT READINESS ☆ CURRENT RATE	RSN	P	S	R	T	EXPECTED RATE	BY	MAJOR EQUIPMENT
2D SERV BN		COL S. DAVIS	CAMLEJ	912	33	C2	P	2	1	1	2	C1	710930	
2D MT BN		LTCOL W. S. GERICHTEN		241	6	C2	P	2	1	1	1	C1	710930	
2D ENGR BN		MAJ W. W. WIDENER		590	10	C3	P	3	1	1	3	C2	710930	
2D RECON BN		MAJ G. E. STRICKLAN		417	13	C2	T	1	1	1	2	C1	710831	
2D SP BN		MAJ R. J. KENWORTHY		433	8	C2	P	2	1	2	2	C1	710930	
2D MED BN		LCDR S. STEVENSON (USN)		154	179	C4	P	4	2	2	2	C3	710831	
2D DENTAL CO		CAPT A.P.GIAMMISSO(USN)			60	C2	P	2	1	1	1	C1	710930	
FORTPS, FMFLANT		BGEN J. C. FEGAN	CAMLEJ	5194	146	C3	P	3	1	1	2	C3	711101	
HQCG		MAJ R. M. OTTERAAEN		474		C1		1	1	1	1			
2D CIT		1STLT R. H. OSBON JR.		16		C1		1	1	1	1			
5TH CIT		CAPT W. A. BROWN		11		C4	P	4	1	1	1	C4	711201	
2D FAG		COL W. W. HIXSON	CAMLEJ			C3	P	3	1	1	3	C2	711015	
HQ BTRY, 2D FAG		CAPT D. J. JORDAN		157	5	C1		1	1	1	1			
2D 8" HOW BTRY SP		MAJ G. C. ROSS		160		C4	P	4	1	1	3	C2	711001	1/M51 VTR, 6/8" HOW SP
2D 175MM GUN BTRY		CAPT F. A. BOZANICH		119		C3	P	3	1	1	3	C2	711012	1/M51 VTR, 6/155 GUN SP, 6/175 GUN SP
5TH 175MM GUN BTRY SP		MAJ R. R. WRIGHT		134		C3	X	4	1	1	4	C2	711030	1/M51 VTR, 6/175 GUN SP
2D TANK BN (-)	25	LTCOL F. E. GRUBE	CAMLEJ	664	12	C3	P	3	1	1	3	C2	711001	17/M103 TK, 55/M48 TK, 5/M51 VTR, 9/M67 TK
2D AMTRAC BN (-)	21	LTCOL R. A. SULIK		766	14	C3	T	2	1	2	3	C1	710901	5/LVTE-1, 12/LVTP-5 COMD, 142/LVTP-5, 4/LVTR
8TH COMM BN		LTCOL R. E. HAISLIP		625	9	C2	P	2	1	2	1	C2	710901	
8TH ENGR BN		LTCOL B. A. KAASMANN		714	13	C4	P	4	3	1	3	C4	711101	
8TH MT BN		LTCOL C. W. TONNACLIFF		353	4	C2	P	2	1	1	2	C2	710914	
2D RADIO BN (-)	29	LTCOL J. T. BRASSFIELD		344	4	C3	P	3	1	2	2	C2	711030	
2D ANGLICO		LTCOL D. E. SCHNEIDER		277	12	C3	T	2	1	1	3	C2	710930	
2D FORCE RECON CO		CAPT A. G. LITTLE		138	3	C3	T	1	1	1	3	C2	710825	
2D TOPO CO		WO J. F. MCGRORY		83	1	C3	P	3	1	1	3	C2	710901	
2D BRIDGE CO		1STLT D. C. BELL		171	1	C3	P	3	1	1	3	C2	710901	
2D HOSPITAL CO		CDR D. W. HOPPING (USN)		30	21	C4	P	4	1	1	4	C3	710901	
22D DENTAL CO		CAPT W.H.HAGERMAN (USN)		5	36	C4	P	4	1	1	1	C2	710901	
2D SEP SURG CO (CADRE)		LCDR G. H. ASHTON (USN)		3	11	C4	N	5	5	5	5			
9TH SEP BULK FUEL CO(CADRE)														
2D MAW		MAJGEN G. C. AXTELL	CHERPT	14404	211	C2	X	2	2	2	3	C2	711231	
MWHS-2		COL D. G. SWINFORD		688	23	C1		1	1	1	1			
12TH FORCE DENTAL CO		CAPT J. H. SMITH (USN)		1	51	C3	P	3	1	1	1	C2	710901	
8TH CIT		WO E. J. JOHNSTON		18		C1		1	1	1	1			
6TH SSCT		1STLT V. E. STROTE		7		C2	R	1	1	2	1	C1	711001	
MATCU-78 (FMFLANT)	*	CAPT A. E. DAVIS	QUANTICO	51		C4	T	3	1	2	4	C4	711101	
MWSG-27		LTCOL W. L. RICE	CHERPT			C3	P	3	1	2	2	C3	711015	
H&MS-27 (-)		LTCOL E. J. HEISE		724	10	C2	P	2	1	1	2	C1	711209	5/C-117D, 1/C-54S
SU 1, H&MS-27 (-)		CAPT K. D. MCCURRY		42		C1		1	1	1	1			
WERS-27		MAJ R. C. BAGLEY JR.		195		C3	P	3	1	1	2	C2	711208	
VMGR-252 (2D MAW)	*	LTCOL M. V. STATZER		336	2	C3	X	3	2	2	4	C3	710901	10/KC-130F
MACG-28		LTCOL A. F. MCCALEB JR.	CHERPT			C2	P	2	2	2	2	C2	710809	
H&HS-28		MAJ E. S. OLIN		254	2	C2	T	2	1	1	2	C2	711022	
MASS-1		MAJ H. F. SAEGER		168		C3	P	3	1	1	2	C2	710930	
2D REDEYE PLAT		1STLT A. W. HEATH		41		C2	P	2	1	1	2	C2	710930	
MACS-5		MAJ J. R. THROGMORTON	BEAUFORT	204		C2	P	2	2	2	2	C2	710805	
MACS-6		MAJ A. M. YOUNGER	CHERPT	243		C3	T	2	2	2	3	C3	711001	
3D LAAM BN		LTCOL J. C. DIXON		529	11	C3	P	3	2	2	2	C3	710921	
MMCS-28		MAJ L. J. MITCHELL		190		C4	P	4	2	2	3	C4	710920	
MCCRTG-20		COL T. G. ELDER	CHERPT			C3	R	1	2	3	2	C3	710825	
H&MS-20		LTCOL V. P. HART JR.		632		C2	X	1	1	2	3	C1	711001	
VMFAT-201		LTCOL R. H. SCHULTZ		348		C3	X	3	1	1	4	C3	710915	4/F-4B, 30/F-4J
VMAT(AW)-202		LTCOL C. G. LAWSON		322		C4	R	1	2	4	2	C3	710815	13/A-6A, 3/TC-4C
VMT-203		LTCOL S. M. WILLIAMS		188	3	C3	T	2	1	1	3	C4	710901	17/TA-4F, 5/TA-4J

* PARENTHETIC UNIT INDICATES OPCON WHEN DIFFERENT FROM ORGANIZATIONAL STRUCTURE.

Unclassified
SECRET
UNCLASSIFIED

TAB 21-7

[redacted] UNCLASSIFIED

MARINE CORPS COMMAND CENTER

STATUS OF FMF UNITS **

11 AUGUST 1971

UNIT *	NOTE	UNIT COMMANDER	LOCATION	STRENGTH USMC	STRENGTH USN	UNIT READINESS ☆ CURRENT RATE	RSN	P	S	R	T	EXPECTED RATE	BY	MAJOR EQUIPMENT
MHTG-40		COL R. B. ENGESSER	NEW RIVER			C1		1	1	1	1			
H&MS-40		MAJ J. P. KIZER		255	1	C1		1	1	1	1			
HMHT-401		LTCOL H. D. GRESS JR.		118		C1		1	1	1	1			12/CH-53D
HMMT-402		LTCOL J. L. FELTER		149		C1		1	1	1	1			19/CH-46F
MAG-14		COL W. R. NOWAINICK	CHERPT			C3	X	3	2	2	4	C2	710801	
H&MS-14		LTCOL R. K. SLACK		720		C2	P	2	1	1	2	C2	711001	1/A-6A, 4/EA-6A, 4/F-4B, 4/TA-4F
MABS-14 (-)		MAJ C. M. DOYLE		292	10	C3	P	3	1	2	1	C3	711001	
SU 1, MABS-14 (-)		MAJ B. L. MEEK	BOGUE, NC	223		C1		1	1	1	1			
MATCU-61		CAPT G. P. HAYES		58		C4	P	4	1	4	2	C2	710926	
VMCJ-2 (-)		LTCOL J. L. GREEN	CHERPT	356	3	C2	R	1	1	2	2	C2	711001	14/EA-6A, 9/RF-4B
DET 60, VMCJ-2 (6THFLT)	16*	MAJ R. C. CONWAY	USS SARATOGA	143	1	C1		1	1	1	1			4/EA-6A
VMA(AW)-121		MAJ E. A. BIRZER	CHERPT	196	1	C3	P	3	1	1	3	C2	710815	11/A-6A
VMA(AW)-224		LTCOL B. R. STANDLEY		283	3	C2	T	1	1	1	2	C1	710805	12/A-6A
VMA(AW)-332		LTCOL P. R. JONES JR.		192	2	C2	P	2	1	1	2	C1	710831	11/A-6A
VMFA-312		MAJ R. G. KROPP		187		C4	P	4	1	3	4	C4	711001	12/F-4B
DET 14, 2D MAW (NAS, KEY WEST)	*		KEY WEST	84		C1		1	1	1	1			5/F-4B
MAG-26		COL G. R. HUNTER	NEW RIVER			C3	R	2	2	3	3	C2	711020	
H&MS-26		MAJ C. E. CANNON		586		C2	X	2	1	1	1	C2	711016	31/CH-46F, 17/CH-53A, 11/CH-53D
MABS-26		MAJ Z. V. LAMASCUS		477	44	C4	P	4	1	1	1	C4	710901	
MATCU-64 (MAG-26)	*	CAPT D. V. ESMOND		53		C4	P	4	1	2	3	C3	710915	
VMO-1		LTCOL R. D. MYERS		189		C3	P	3	2	3	1	C3	710806	17/OV-10A
HMA-269		LTCOL L. W. SMITH		158		C4	T	4	1	1	4	C2	710901	27/AH-1J, 5/UH-1E, 2/UH-1N
HML-167		LTCOL H. S. LOWREY												
HMM-162 (32D MAU)	5*	LTCOL J. W. ALBER	32D MAU	237	3	C1	X	1	1	2	1		710831	12/CH-46F, 4/CH-53D, 2/UH-1E
HMM-261		MAJ D. R. ALLEN JR.	NEW RIVER	251		C2	R	1	1	2	1	C2	710901	25/CH-46F
HMM-263		LTCOL V. M. HAZELBAKER	QUANTICO	100		C4	P	4	4	4	4	C3	710915	20/CH-46D, 9/CH-46F
HMM-264		MAJ R. K. GOFORTH	NEW RIVER	238		C1		1	1	1	1			22/CH-46F, 4/CH-53D
HMH-362		MAJ R. F. WILEY		178		C2	R	1	1	2	1	C1	711027	17/CH-53D
HMH-461		LTCOL D. E. WEBB		191		C4	R	2	2	4	3	C3	710920	2/CH-53A, 12/CH-53D
MAG-31		COL N. B. MCCRARY	BEAUFORT			C2	X	3	1	2	3	C2	710930	
H&MS-31		MAJ G. B. FERRINGTON		671		C3	R	2	1	3	2	C3	710815	1/C-117D, 2/F-4B, 3/F-4J, 3/TA-4F
MABS-31		MAJ J. L. CUNNINGHAM		325	18	C3	P	3	1	1	3	C3	710903	
MATCU-69		CAPT W. T. FARROW		39		C4	P	4	1	2	4	C4	710925	
VMFA-251		MAJ J. M. MEAD		274	1	C2	X	2	1	2	3	C2	711001	6/F-4B, 9/F-4J
VMFA-333 (CVA-66)	3*	LTCOL R. PLANT	USS AMERICA	303	1	C2	S	1	2	1	1	C1	711231	12/F-4J
VMFA-451		LTCOL R. J. WEISS	BEAUFORT	270	1	C2	T	2	1	2	2	C2	710930	18/F-4J
MAG-32		COL I. L. MORGAN	BEAUFORT			C2	X	3	2	2	3	C2	710930	
H&MS-32		MAJ R. L. UPCHURCH		512		C2	X	3	2	2	2	C2	710901	1/C-117D, 5/TA-4F
MABS-32		MAJ H. R. PALMATEER		376	17	C3	P	3	2	2	1	C3	710901	
MATCU-63		1STLT M. M. HENDERSON		37		C3	X	4	1	2	2	C3	710915	
VMA-324		LTCOL G. J. ERTLMEIER		175	1	C2	X	2	2	2	3	C2	710730	5/A-4E, 17/A-4M
VMA-331		LTCOL P. E. BROOKSHIRE		185		C4	T	2	1	2	4	C3	711001	22/A-4E
VMA-513		LTCOL C. M. BAKER		142	2	C4	T	4	3	2	4	C3	711101	7/AV-8A
2D FSR		COL R. G. EYKYN	CAMLEJ	2098	27	C3	P	3	1	1	3	C4	711101	
H&SBN		LTCOL J. B. CANTIENY		609	19	C3	P	3	1	1	3	C2	711101	
SUPPLY BN		LTCOL J. F. FORHAN		740	8	C4	P	4	1	1	4	C4	711001	
MAINT BN		MAJ P. S. GALLIGAN		749		C3	P	3	1	1	3	C4	711001	3/LVTR, 2/M51 VTR

* PARENTHETIC UNIT INDICATES OPCON WHEN DIFFERENT FROM ORGANIZATIONAL STRUCTURE.

Unclassified

TAB 21-8

[redacted] UNCLASSIFIED

UNCLASSIFIED

[redacted]

MARINE CORPS COMMAND CENTER

STATUS OF FMF UNITS**

11 AUGUST 1971

UNIT	NOTE	UNIT COMMANDER	LOCATION	STRENGTH		UNIT READINESS☆								MAJOR EQUIPMENT
						CURRENT						EXPECTED		
				USMC	USN	RATE	RSN	P	S	R	T	RATE	BY	

☆UNIT READINESS RATING CATEGORY

C-1 FULLY COMBAT READY
C-2 SUBSTANTIALLY COMBAT READY
C-3 MARGINALLY COMBAT READY
C-4 NOT COMBAT READY

☆READINESS ABBREVIATIONS

P PERSONNEL READINESS
S SUPPLIES/EQUIPMENT ON HAND
R EQUIPMENT READINESS
T TRAINING READINESS
X COMMANDERS SUBJECTIVE JUDGEMENT
N RESOURCE ALLOCATION BY COGNIZANT SERVICE DOES NOT PERMIT A HIGHER C-RATING

NOTES

1. BLT 1/4 BREAKDOWN ON TAB 34.
2. 31ST MAU BREAKDOWN ON TAB 34.
3. ABOARD USS AMERICA (CVA-66).
4. ASSIGNED III MAF
5. LANFOR6THPLT 1-71 (32D MAU) BREAKDOWN ON TAB 36.
6. LANFORCARIB 1-71 BREAKDOWN ON TAB 36.
7. AT FUJI TRNG (3D RECON BN (-)(REIN), CO B, 3D TANK BN AND BTRY F/2/12).
8. H&SCO, CO B, 1ST SP BN IN CADRE STATUS.
9. GTMO BN (REIN) BREAKDOWN ON TAB 36-2.
10. TRUCK CO, 1ST SERV BN (CADRE).
11. CO C, 7TH ENGR BN (CADRE).
12. THIS UNIT IS BOTH ADCON/OPCON TO WERS-17 (-).
13. AIR ALERT BATTALION.
14. PERSONNEL AND EQUIPMENT CARRIED IN HQBN, 1ST MARDIV.
15. VIEQUES TRNG (DET, H&SCO, CO E, 2/2).
16. ABOARD USS SARATOGA (CVA-60).
17. INCLUDES STRENGTH CO D, 7TH ENGR BN AND 1ST PLAT, 1ST BRIDGE CO.
18. H&SCO, CO B, CO C, AND CO D, 1ST TANK BN (CADRE).
19. H&SCO, CO B, AND CO C, 3D AMTRAC BN (CADRE).
20. PERSONNEL AND EQUIPMENT CARRIED IN HQBN, 2D MARDIV.
21. ONE PLATOON IS DEPLOYED WITH LANFOR6THPLT 1-71 AND ALSO ONE PLATOON WTIH LANFORCARIB 1-71.
22. PERSONNEL AND EQUIPMENT CARRIED IN HQBN, 3D MARDIV.
23. UNASSIGNED.
24. SANGLEY AUGMENTATION FORCE (DET, 4TH MARINES w/2 OFF AND 152 ENL) AT SANGLEY PT, R.P.I.
25. ONE PLATOON IS DEPLOYED WITH LANFOR6THPLT 1-71, ONE PLATOON WITH LANFORCARIB 1-71 AND ONE PLATOON WITH THE GTMO BN.
26. STRENGTH INCLUDES DET, H&SCO, DET, ENGR SPT CO, AND CO A, 1ST ENGR BN.
27. THIS UNIT IS BOTH ADCON/OPCON TO MAG-12, HOWEVER, IS PHYSICALLY LOCATED ON OKINAWA WITH THEIR STRENGTH CARRIED UNDER OKINAWA.
28. FOUR OFFICERS AND 15 ENLISTED ATTACHED TO VAL-4 FOR EVALUATION OF YOV-10D.
29. TWO OFF & 32 ENL DEPLOYED TO MOROCCO & 1 OFF & 10 ENL DEPLOYED TO GTMO ON A PERMANENT BASIS.

** SOURCE: MARES FORSTAT REPORT DATED 2 AUGUST 1971.

UNCLASSIFIED

TAB 21-9

[redacted]

Unclassified

UNCLASSIFIED
[redacted]

MARINE CORPS COMMAND CENTER

RECAPITULATION OF FMF ACTUAL STRENGTHS *

FMF

11 AUGUST 1971

UNIT	GROUND		AIR		GRAND TOTAL	
	USMC	USN	USMC	USN	USMC	USN
FMF	62,372	2,428	36,463	623	98,835	3,051

PACIFIC

FMFPAC	38,792	1,607	21,979	412	60,771	2,019
MIDPAC	3,697	133	1,957	34	5,654	167
HQ, FMFPAC	997	35	63		1,060	35
1ST MARBDE	1,979	85	1,894	34	3,873	119
OTHER	721	13			721	13
WESTPAC (III MAF)	17,667	831	8,913	155	26,580	986
III MAF (OKINAWA)	17,667	831	3,059	31	20,726	862
HQ, III MAF	131				131	
3D MARDIV (-) (REIN)	14,431	780			14,431	780
1ST MAW			3,059	31	3,059	31
3D FSR	3,105	51			3,105	51
III MAF (JAPAN)			5,854	124	5,854	124
1ST MAW			5,854	124	5,854	124
(1) LANFOR 7TH FLT	2,780	138	353	3	3,133	141
31ST MAU	1,428	64	353	3	1,781	67
BLT 1/4	1,352	74			1,352	74
EASTPAC	17,428	643	11,109	223	28,537	866
HQ, I MAF	21				21	
1ST MARDIV (-) (REIN)	14,348	524			14,348	524
FORTRPS FMFPAC	1,495	75			1,495	75
3D MAW			11,109	223	11,109	223
1ST FSR	1,564	44			1,564	44

ATLANTIC

FMFLANT	23,580	821	14,484	211	38,064	1,032
EAST COAST	23,580	821	14,484	211	38,064	1,032
HQ, FMFLANT	726	4	80		806	4
2D MARDIV	15,562	644			15,562	644
FORTRPS FMFLANT	5,194	146			5,194	146
2D MAW			14,404	211	14,404	211
2D FSR	2,098	27			2,098	27
(2) CARIBBEAN	2,220	78			2,220	78
GTMO BN (REIN)	947	30			947	30
LANFORCARIB 1-71	1,273	48			1,273	48
(2) MEDITERRANEAN	1,460	66	684	5	2,144	71
LANFOR6THFLT 1-71 (32D MAU)	1,460	66	238	3	1,698	69
DET 60, VMCJ-2			143	1	143	1
VMFA-333			303	1	303	1

NOTES:
(1) STRENGTH INCLUDED IN III MAF OKINAWA.
(2) STRENGTH INCLUDED IN EAST COAST.

* SOURCE: MARES FORSTAT REPORT DATED 2AUG71.

TAB 22

Unclassified
UNCLASSIFIED

[redacted] UNCLASSIFIED

MARINE CORPS COMMAND CENTER

DISTRIBUTION OF MAJOR GROUND EQUIPMENT AND AIRCRAFT

GROUND EQUIPMENT

11 AUGUST 1971

EQUIPMENT		NOTE	TOTAL EQUIP	JAPAN	OKI	7TH FLT MAU s	MID PAC	CAM PEN	29 PALMS			CAM LEJ	GTMO	6TH FLT MAU s	CARIB	OTHER
81MM MORTAR	M29		199		33	16	16	64				54	8	8		
106MM RR	M40A1C		190		32	16	16	56				54	8	8		
107MM	M30		6					6								
105MM HOW TD	M101A	4	150	6	18	12	24	36				48		6		
155MM HOW TD	M114A1															
155MM HOW SP	M109		53		17				18			18				
155MM GUN SP	M53		18						12			6				
175MM GUN SP			12									12				
8" HOW SP	M110		12		2				4			6				
90MM GUN TANK	M48	4	133	5	38	10		25				43	7	5		
120MM GUN TANK	M-103		32					15				12	5			
FLAME TANK	M-67		24		8			7				7	2			
VTR	M-51		23		6			5	4			8				
LVTR	M-51		11		3		1	3				4				
LVTP-5 COMD			32		7	2	3	8				11		1		
LVTP-5			332		56	20	44	70				132		10		
LVTE-1			15		5			5				5				

AIRCRAFT

AIRCRAFT	NOTE	TOTAL A/C	JAPAN	OKI	7TH FLT MAU s	MID PAC	EL TORO	SANTA ANA	YUMA	CH PT	BEAU	NEW RIVER	6TH FLT MAU s	CARIB	OTHER
FIXED WING															
C-117D		19	4			1	7			5	2				
KC-130F		24		6			8			10					
C-131F	7	1													1
C-54P/Q/R/S/T	7	6	3				1			1					1
TA-4F		57	4			2	8		14	21	8				
TA-4J		9							4	5					
TC-4C		3								3					
T-28B	7	7				5									2
AV-8A		7									7				
A-6A		79	12				19			48					
EA-6A	1	30	6				2			18					4
RF-4B		28	9				10			9					
F-4B	3	110	14			7	37		19	20	8				5
F-4J	5	117	16			29				30	30				12
A-4E		95	43						25		27				
A-4F		30					30								
A-4M		17									17				
OV-10A	2	53		11		3	4	7				17			11
US-2A	7	1													1
US-2B	7	2				1									1
HELICOPTERS															
UH-1E	2	64		18	4	8		6				5	2		21
UH-1N		2										2			
AH-1G															
AH-1J		31		4								27			
CH-46A		5				5									
CH-46D	6	133	3	29	13	30		38							20
CH-46F	6	159						41				50	59		9
CH-53A		72						53				17	2		
CH-53D		96		17	4	15						23	37		
VH-34D		1				1									
UH-34D	7	3				2									1

NOTES:
1. DET, VMCJ-2 ABOARD USS SARATOGA (CVA-60) IN "OTHER" (4/EA-6A A/C ASSIGNED). AFLOAT MED.
2. AT CAMPEN IN "OTHER".
3. AT KEY WEST IN "OTHER".
4. AT FUJI TRNG AREA, 3D RECON BN (-) WITH CO B, 3D TANK BN (-) AND BTRY F/2/12.
5. ABOARD USS AMERICA (CVA-66)(VMFA-333)(12/F-4J) IN "OTHER".
6. AT QUANTICO IN "OTHER".
7. AT FMFLANT, NORFOLK, VA. IN "OTHER".

Unclassified

UNCLASSIFIED [redacted]

TAB-23

UNCLASSIFIED

MARINE CORPS COMMAND CENTER

FLEET MARINE FORCE DISPOSITION

11 AUGUST 1971

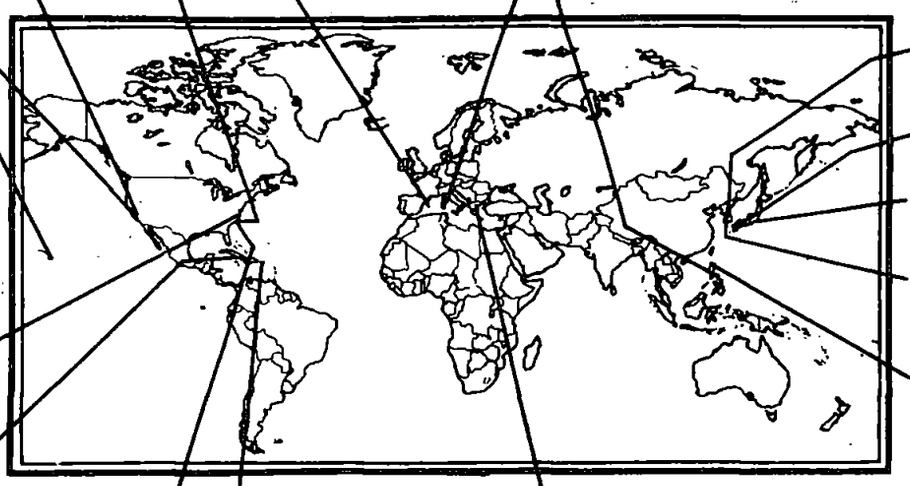

DISTRIBUTION BY BATTALION/SQUADRON

	INF BNS	VMFA	VMA	VMA(AW)	VMCJ	HMM	HMH	*HML	VMO	VMGR
WESTPAC	6	2	2	1	1	2	1	1	1	1
OKINAWA	(4)	(2)	(2)	(1)	(1)	(1)	(1)	(1)	(1)	(1)
JAPAN										
LANDING FORCE	(2)					(1)				
MIDPAC	2	3				1	1			
HAWAII	(2)	(3)				(1)	(1)			
EASTPAC	10	4	2	2	1	2	2	1	1	1
EL TORO/SANTA ANA		(4)	(2)	(2)	(1)	(2)	(2)			(1)
CAMPEN	(10)							(1)	(1)	
ATLANTIC	8	4	3	3	1	3	2	*2	1	1
CAMP LEJEUNE	(6)									
CHERRY POINT		(1)		(3)	(1)					(1)
BEAUFORT		(3)	(3)							
NEW RIVER						(2)	(2)	*(2)	(1)	
QUANTICO						(1)				
CARIB	(2)									
EUROPE	1					1				
MEDITERRANEAN	(1)					(1)				
GRAND TOTAL	27	13	7	6	3	9	6	4	3	3

*HMA-269, MAG-26 AT NEW RIVER, N. C.

UNCLASSIFIED

Unclassified

[redacted]

TAB 31-1

[redacted]

UNCLASSIFIED

MARINE CORPS COMMAND CENTER

11 AUGUST 1971

FLEET MARINE FORCE MOVEMENTS

	UNIT	ETD/ATD	FROM	DESTINATION	ETA/ATA
	MOVEMENTS 5 - 11 AUGUST 1971				
(3)	DET 60, VMCJ-2	5AUG71	OPS AEGEAN SEA	ATHENS, GREECE	5AUG71
(1)	VMFA-333	10AUG71	OPS WESTERN MED	PALMA, MALLORCA, SPAIN	11AUG71
(2)	LANFOR6THFLT 1-71 (32D MAU)	6AUG71	NAPLES, ITALY	PORTO SCUDO, SARDINIA	8AUG71
(7)	LANFORCARIB 1-71 (BLT 1/6)	1AUG71	JAMAICA	MOREHEAD CITY, NORTH CAROLINA	5AUG71
	PROJECTED MOVEMENTS 12 - 18 AUGUST 1971				
(1)	VMFA-333	16AUG71	PALMA, MALLORCA, SPAIN	OPS CENTRAL MED	17AUG71
(3)	DET 60, VMCJ-2	16AUG71	ATHENS, GREECE	OPS CENTRAL MED	17AUG71
	3D RECON BN (-)(REIN)	15AUG71	FUJI, JAPAN	OKINAWA	17AUG71
	CO B, 3D TANK BN (-)	15AUG71	FUJI, JAPAN	OKINAWA	17AUG71
	BTRY F, 2D BN, 12TH MAR	15AUG71	FUJI, JAPAN	OKINAWA	17AUG71
	BLT 1/9	18AUG71	OKINAWA	FUJI, JAPAN	20AUG71
(4)	LANFOR7THFLT (31ST MAU)	12AUG71	SUBIC BAY, R.P.I.	SASEBO, JAPAN	16AUG71

NOTES:

(1) PARTICIPATED IN EXERCISE CRAE AT CAPO TEULADA, SARDINIA, DURING THE PERIOD 9-10AUG71. EXERCISE CRAE (COMBAT READINESS ASSESSMENT EXERCISE) WAS A LIVE ORDNANCE EXERCISE TO TEST ALL ELEMENTS OF CONVENTIONAL AVIATION ORDNANCE DELIVERY AND RESUPPLY. SCHEDULED FOR PORT VISIT PALMA, MALLORCA, SPAIN (11-15AUG71). SCHEDULED FOR OPERATIONS IN THE CENTRAL MED (16-20AUG71).

(2) LANFORSIXTHFLT 1-71 (32D MAU) IS PARTICIPATING IN PHIBLEX 2-72 DURING THE PERIOD 8-18AUG71 CONDUCTING THE HELIBORNE AND AMPHIBIOUS ASSAULT AT PORTO, SCUDO, SARDINIA. THIS WILL BE FOLLOWED BY A LIVE FIRING EXERCISE AT CAPO TEULADA, SARDINIA, IMPACT AREA FOR TRAINING IN NAVAL GUNFIRE SUPPORT, CLOSE AIR SUPPORT AND WITH ALL ORGANIC MAU WEAPONS.

(3) AT ATHENS, GREECE, (5-16AUG71) FOR UPKEEP. SCHEDULED FOR OPERATIONS IN THE CENTRAL MED (17-18AUG71).

(4) AT SUBIC BAY, R.P.I., (2-11AUG71) FOR UPKEEP. ENROUTE SASEBO, JAPAN, 12-15AUG71 FOR PORT VISIT.

(5) CG, I MAF ACTIVATED THE 7TH MAB (HQ, 7TH MAB, 7TH MARINES AND PROV MAG-50) FOR PLANNING ON 1JUL71 FOR PARTICIPATION IN ROPEVAL 3-71, A MAB SIZE AMPHIBIOUS EXERCISE TO BE CONDUCTED IN THE CAMP PENDLETON/CLEVELAND NATIONAL FOREST AREAS DURING THE PERIOD 8-17SEP71. LANDING FORCE OPERATIONS WILL BE DESIGNED TO TRAIN FORCES IN THE PLANNING AND EXECUTION OF AMPHIBIOUS OPERATIONS INVOLVING THE TECHNIQUE OF STAND-OFF AMPHIBIOUS ASSAULT AND ASPECTS OF THE SEA-BASING CONCEPT. BGEN P. G. GRAHAM, CG, FORTRPS, FMFPAC, IS DESIGNATED AS CG 7TH MAB.

(6) CG FMFLANT ACTIVATED THE 8TH MAB (HQ, 8TH MAB, BLT 1/2 (LANFORSIXTHFLT 2-71), BLT 3/6 AND PROV MAG-40) FOR PLANNING AND PARTICIPATION IN EXERCISE DEEP FURROW-71. EXERCISE DEEP FURROW-71 IS A JOINT AND COMBINED NATO EXERCISE TO BE CONDUCTED DURING THE PERIOD 9-20OCT71 TO INCLUDE AMPHIBIOUS LANDINGS IN TURKISH THRACE BY A COMBINED U.S. AND UNITED KINGDOM/ITALIAN LANDING FORCE. BGEN T. H. MILLER, JR., AWC 2D MAW, IS DESIGNATED AS CG 8TH MAB.

(7) LANFORCARIB 1-71 (BLT 1/6) ARRIVED MOREHEAD CITY, NORTH CAROLINA, ON 5AUG71 AND ASSUMED CONUS STANDBY FROM 6AUG-10SEP71.

UNCLASSIFIED

Unclassified

TAB 31-2

C[redacted]

UNCLASSIFIED

MARINE CORPS COMMAND CENTER

FMF PACIFIC UNIT LOCATIONS AND STRENGTHS*
(MIDPAC/EASTPAC)

11 AUGUST 1971

MIDPAC

FMFPAC

HQ, FMFPAC

1st MAR BDE

HQ, 1ST MAR BDE (KANEOHE)

3D MARINES (-) (REIN)
- 1/3
- 2/3

MAG-24
- VMFA-212 (F-4J)
- VMFA-235 (F-4J)
- VMFA-122 (F-4B)
- HMM-262 (CH-46D)
- HMH-463 (CH-53D)
- DET, VMO-6 (-) (OV-10A)
- DET, HML-367(-) (UH-1E)

MIDPAC STRENGTH RECAPITULATION	USMC	USN
HQ, FMFPAC	1,060	35
HQ, 1ST MAR BDE	253	28
3D MAR(-) (REIN)	1,025	57
SERVICE/SUPPORT UNITS	701	
MAG-24	1,894	34
OTHER	721	13
GRAND TOTAL MIDPAC	5,654	167

EASTPAC

I MAF

HQ, I MAF (CAMP PENDLETON)

1ST MAR DIV (-) (REIN)

1ST MARINES
- 1/1
- 2/1
- 3/1

5TH MARINES 3/3 (CADRE)
- 1/5
- 2/5
- 3/5

7TH MARINES
- 1/7 (CADRE)
- 2/7
- 3/7

FORTRPS FMFPAC

HQ, FORTRPS FMFPAC (29 PALMS)

3D MAW

HQ, 3D MAW (EL TORO)

MAG-11 (EL TORO)
- VMFA-314
- VMFA-323 (F-4B)
- VMFA-334
- VMFA-531 (F-4B)

MAG-13 (EL TORO)
- VMA-214 (A-4F)
- VMA-223 (A-4F)
- VMA(AW)-225
- VMA(AW)-242 (A-6A)
- VMCJ-3 (RF-4B/EA-6A)

MWSG-37 (EL TORO)
- VMGR-352 (KC-130F)

MHTG-30 (SANTA ANA)
- HMHT-301 (CH-53A)
- HMMT-302 (CH-46F)

MAG-16 (SANTA ANA)
- HMM-161 (CH-46D)
- HMM-163 (CH-46F)
- HMH-361 (CH-53A)
- HMH-363 (CH-53A)

MAG-16 ELEMENTS (CAMPEN)
- VMO-2
- HML-267 (OV-10A/UH-1E)

MCCRTG-10 (YUMA)
- VMFAT-101 (F-4B)
- VMAT-102 (A-4E)
- VMT-103 (TA-4F/J)

1ST FSR

EASTPAC	USMC	USN
HQ, I MAF	21	
1ST MAR DIV (-) (REIN)	14,348	524
HQ, FORTRPS FMFPAC	1,495	75
3D MAW	11,109	223
1ST FSR	1,564	44
GRAND TOTAL EASTPAC	28,537	866

*SOURCE: MARES FORSTAT REPORT DATED 2AUG71.

Unclassified

TAB 32

UNCLASSIFIED

[redacted] UNCLASSIFIED

MARINE CORPS COMMAND CENTER

FMF PACIFIC UNIT LOCATIONS AND STRENGTHS AND OSD CEILING CONSIDERATIONS (WESTPAC)

11 AUGUST 1971

RVN

USMC TRANSITIONAL SUPPORT FORCE

NAVFORV	5
HQ STAFF MACV	49
JUSPAO	4
SAE	2
I CORPS	3
NAV ADV GRU	80
SOG	17
AID DEPT STATE	3
DEF COM AGCY	11
SUB UNIT 1, 1ST ANGLICO	180
EMBASSY SECURITY	156
CORDS	5
NOG DET YOV-10	21
DCPG LNO	3
DET, H&HS-18	20
DOD SPEC REP	3
ROK LOG TEAM	13
CREDIT ACCOUNT	60
MEDTC	1
WESTPAC TRANS OFF	1
TOTAL - OSD PROGRAM XIII SPACE AUTHORIZATION	637

	USMC	USN
OSD PROGRAM XIII SPACE AUTHORIZATION	637	
SUB UNIT 1, 1ST ANGLICO	168	10
MACV STAFF/MACV FIELD	163	
NAVADVGRU/MACV UNITS	56	
OTHERS	160	
TOTAL RVN STRENGTH AS OF 5AUG71.	547	10

OKINAWA

III MAF (TF-79)

HQ, III MAF

3D MARDIV (-) (REIN) (TF-79.2)

HQ, 3D MARDIV (-)(REIN)
- 4TH MARINES
  - 1/4 (BLT)
  - 2/4
  - 3/4
- 9TH MARINES
  - 1/9
  - 2/9 (31ST MAU)
  - 3/9

1ST MAW

MAG-36

VMGR-152	(KC-130F)
VMO-6 (-)	(OV-10A/UH-1E)
HMH-462	(CH-53D)
HMM-164	(CH-46D/CH-53D/UH-1E)(31ST MAU)
HMM-165	(CH-46D)
HML-367	(UH-1E/AH-1G/J)

3D FSR

		USMC	USN
	OSD PROGRAM XIII SPACE AUTHORIZATION	19,249	934
	OKINAWA STRENGTH RECAPITULATION		
	III MAF		
	HQ, III MAF	131	
(3)	3D MARDIV (-)(REIN)	12,666	580
	1ST MAW ELEMENTS	3,021	32
	3D FSR	3,080	50
(1)	III MAF TOTAL	18,898	662
	OTHERS		
	MCB CAMP BUTLER/NON FMF	1,295	25
	NON-DEPLOYABLE CASUALS	0	
	SVN ORIGINATED PATIENTS	3	
	OTHER TOTAL	1,298	25
	GRAND TOTAL OKINAWA STRENGTH AS OF 22JUL71.	20,196	687

JAPAN

1ST MAW (TF-79.3)

HQ, 1ST MAW
- MAG-12

VMA-211	(A-4E)
VMA-311	(A-4E)
VMA(AW)-533	(A-6A)

- MAG-15

VMFA-115	(F-4B)
VMFA-232	(F-4J)
VMCJ-1	(EA-6A/RF-4B)

		USMC	USN
	OSD PROGRAM XIII SPACE AUTHORIZATION	7,000	
	JAPAN STRENGTH RECAPITULATION		
	HQ, 1ST MAW	853	54
	1ST MAW	5,276	53
(2)	NON-FMF	1,043	
	GRAND TOTAL JAPAN STRENGTH AS OF 22JUL71.	7,172	107

NOTES
(1) LESS ONE MAU.
(2) INCLUDES MCAS, IWAKUNI, MB YOKOSUKA, MB SASEBO, AND CO "E", MAR SPT BN.
(3) SANGLEY AUGMENTATION FORCE (DET, 4TH MARINES) CONSISTING OF 2 OFF AND 152 ENL INCLUDED IN 3D MARDIV (-) (REIN) STRENGTH.

SOURCES: RVN STRENGTH: COMUSMACV WEEKLY STRENGTH REPORT MSG 070735ZAUG71.

OKI/JAPAN STRENGTH: FMFPAC WESTPAC STRENGTH VERIFICATION MSG 270209ZJUL71.

Unclassified

TAB BB

[redacted] UNCLASSIFIED

[redacted]

UNCLASSIFIED

MARINE CORPS COMMAND CENTER

LANDING FORCES, SEVENTH FLEET

31st MAU*

11 AUGUST 1971

UNITS EMBARKED TASK GROUP 79.4	STRENGTH USMC OFF	STRENGTH USMC ENL	STRENGTH USN OFF	STRENGTH USN ENL
31ST MAU HQ DET	9	13		
COL E. F. ROTH, JR.				
BLT 2/9				
(LTCOL F. J. JOHNSON, JR.)				
2D BN, 9TH MARINES	40	1020	2	38
E/2/12TH MARINES	4	89		2
PLT, CO C, 3D RECON BN	1	23		2
PLT, CO B, 1ST AMTRAC BN	1	44		1
PLT, CO C, 3D SP BN	1	38		2
PLT, CO A, 3D MT BN	1	21		
PLT, CO A, 3D TANK BN	1	26		1
PLT, CO A, 3D ENGR BN	1	37		1
PLT, CO B, 3D MED BN		5	1	16
DET, HQBN, 3D MARDIV	1	7		
LOGISTIC SUPPORT UNIT				
DET, 3D SERV BN	1	31		1
DET, 3D FSR	1	25		
DET, 3D DENTAL CO			1	1
HMM-164	53	239	1	2
(LTCOL A. J. KETTERING)				
DET, HMH-462	8	29		
DET, HML-367	7	17		
TOTALS	130	1651	5	67

SHIPPING

USS NEW ORLEANS (LPH-11)
USS VANCOUVER (LPD-2)
USS WEXFORD COUNTY (LST-1168)
USS THOMASTON (LSD-28)

AIRCRAFT

13/CH-46D
4/CH-53D
4/UH-1E

ARMS & EQUIPMENT

1 LVTP-5 CMD
10 LVTP-5
5 M48 TANKS
6 105 HOW TD
8 106MM RR
8 81MM MORTAR
36 TRUCK, UTILITY PLATFORM W/O 106 RR, M-274
40 TRUCK, UTILITY, M-151 & M-715
1 TRUCK, UTILITY MRC-83
2 TRUCK, UTILITY MRC-123
4 TRUCK, UTILITY MRC-109
1 TRUCK, UTILITY MRC-124
1 TRUCK, UTILITY MRC-135
1 TRUCK, AMBULANCE M-718
1 TRUCK, CARGO 5T M-54
2 TRUCK, TANK M-49
2 TRUCK, DUMP 5T M-51
5 TRUCK, CARGO 3/4T M-37
35 TRUCK, CARGO 2½T M-35
1 TRUCK, WRECKER 5T M-543
36 TRAILER, CARGO M-416
17 TRAILER, CARGO M-105
6 TRAILER, TANK WATER M-149
2 TRAILER, CARGO M-101
2 KW LIGHT UNIT
4 TRACTOR TD-15 & TD-25
3 CRANE M-60 & M-62
1 HYPOCHLORINATION UNIT
2 TRUCK, M-43
2 ROUGH TERRAIN FORK LIFT (6000 LBS)
1 STEAM CLEANER
1 WATER PURIFICATION UNIT
1 BATH UNIT
2 GENERATOR PU 708/G & PU 692/G
4 GENERATOR PU-667 & PU 669
51 M60 MG
18 M60 MG HELO MOUNTED
39 50 CAL. HELO MOUNTED
6 60MM MORTAR
24 3.5 ROCKET LAUNCHER
8 FLAME THROWERS
10 50 CAL. MG

BLT 1/4*

4 AUGUST 1971

UNITS EMBARKED TASK GROUP 79.5	STRENGTH USMC OFF	STRENGTH USMC ENL	STRENGTH USN OFF	STRENGTH USN ENL
BLT 1/4				
(LTCOL D. G. ROBISON)				
1ST BN, 4TH MARINES	44	934	2	44
BTRY "C", (REIN), 3D BN, 12TH MAR	8	119	1	2
PLT, CO D, 3D RECON BN	1	20		
PLT, CO A, 1ST AMTRAC BN	1	39		1
PLT, CO C, 3D TANK BN	1	27		1
PLT, CO C, 9TH MT BN	1	22		
PLT, CO C, 3D ENGR BN	1	39		1
PLT, CO C, 3D SP BN	1	45		2
PLT, CO D, 3D MED BN		5	1	17
DET, 3D DENTAL CO			1	1
DET, HQBN, 3D MARDIV	1	4		
LOGISTIC SUPPORT UNIT	1	38		
DET, 3D SERV BN				
DET, 3D FSR				
TOTALS	60	1292	5	69

SHIPPING

USS JUNEAU (LPD-10)
USS ST. LOUIS (LKA-116)
USS ALAMO (LSD-33)
USS WHITFIELD CTY (LST-1169)

AIRCRAFT

ARMS & EQUIPMENT

1 LVTP-5 CMD
10 LVTP-5
5 M48 TANKS
6 105 HOW TD
8 106MM RR
8 81MM MORTAR
33 TRUCK, UTILITY PLATFORM W/O 106 RR, M-274
30 TRUCK, UTILITY , M-151
4 TRUCK, VAN MRC-109
2 TRUCK, UTILITY M-123
2 TRUCK, UTILITY M-124
1 TRUCK, AMBULANCE M-718
2 TRUCK, AMBULANCE M-43
16 TRUCK, CARGO 2½T M-35
4 TRUCK, CARGO 3/4T M-37
2 TRUCK, TANK M-49
2 TRUCK, DUMP 5T M-51
14 TRUCK, CARGO 5T M-54
1 TRUCK, WRECKER 5T M-543
4 TRAILER, CARGO M-101
6 TRAILER, CARGO 3/4T M-101A1
15 TRAILER, CARGO M-105
4 TRAILER, TANK WATER M-149
27 TRAILER, CARGO M-416
1 30 KW GENERATOR
1 GENERATOR SET PU-720G
1 GENERATOR SET TRAILER MOUNTED PU-692G
1 BATH UNIT
1 WATER PURIFICATION UNIT
2 CONEX BOX
1 STEAM CLEANER

Unclassified

UNCLASSIFIED

[redacted]

* SEE TAB 31 FOR PRESENT LOCATION

TAB 34

UNCLASSIFIED

MARINE CORPS COMMAND CENTER

FMF ATLANTIC UNIT LOCATIONS AND STRENGTHS*

11 AUGUST 1971

EAST COAST

FMFLANT

HQ, FMFLANT (NORFOLK)

2D MARDIV

HQ, 2D MARDIV (CAMLEJ)

2D MARINES
- 1/2
- 2/2
- 3/2 (LANFOR6THFLT 1-71)(32D MAU)

6TH MARINES
- 1/6 (LANFORCARIB 1-71)
- 2/6
- 3/6

8TH MARINES
- 1/8
- 2/8 (GTMO BN (REIN)
- 3/8

FORTRPS FMFLANT

HQ, FORTRPS (CAMLEJ)

2D MAW

HQ, 2D MAW (CHERRY POINT)

MAG-14 (CHERRY POINT)

VMCJ-2	(RF-4F/EA-6A)
VMA(AW)-224	(A-6A)
VMA(AW)-121	(A-6A)
VMA(AW)-332	(A-6A)
VMFA-312	(F-4B)

MWSG-27 (CHERRY POINT)

VMGR-252	(KC-130F)

MCCRTG-20 (CHERRY POINT)

VMFAT-201	(F-4B/J)
VMAT(AW)-202	(A-6A/TC-4C)
VMT-203	(TA-4F/J)

MAG-31 (BEAUFORT)

VMFA-251	(F-4B/J)
VMFA-333	(F-4J)
VMFA-451	(F-4J)

MAG-32 (BEAUFORT)

VMA-331	(A-4E)
VMA-324	(A-4E/M)
VMA-513	(AV-8A)

MAG-26 (NEW RIVER)

VMO-1	(OV-10A)
HML-167	(UH-1E)
HMM-162	(CH-46F/CH-53D/UH-1E)(LANFOR6THFLT 1-71)(32D MAU)
HMM-261	(CH-46F)
HMM-264	(CH-46F)
HMM-263	(CH-46D/F) (QUANTICO)
HMH-461	(CH-53A/D)
HMH-362	(CH-53D)
HMA-269	(UH-1E/N/AH-1J)

MHTG-40 (NEW RIVER)

HMHT-401	(CH-53D)
HMMT-402	(CH-46F)

2D FSR

FMFLANT STRENGTH RECAPITULATION	USMC	USN
HQ, FMFLANT	806	4
2D MARDIV	15,562	644
FORTRPS	5,194	146
2D MAW	14,404	211
2D FSR	2,098	27
GRAND TOTAL FMFLANT	38,064	1,032

* SOURCE: MARES FORSTAT REPORT DATED 2AUG71.

TAB 35

Unclassified

UNCLASSIFIED

C[redacted]

UNCLASSIFIED

MARINE CORPS COMMAND CENTER

LANDING FORCE, SIXTH FLEET 1-71 *

32D MAU

11 AUGUST 1971

UNITS EMBARKED	STRENGTH			
TASK GROUP 61/62	USMC		USN	
	OFF	ENL	OFF	ENL
32D MAU HQ	12	38		
(COL J. R. WEAVER)				
DET, PAO SECT				
DET, PHOTO SECT				
BLT 3/2				
(LTCOL T. J. WILLIS)				
3D BN, 2D MARINES	42	903	2	31
DET, HQCO, 2DMAR DIV		4		
BTRY I, 3DBN, 10THMAR	8	144		2
DET, HQBTRY, 3DBN, 10THMAR		7	1	
3D PLAT, CO A, 2D ENGR BN	1	38		
1ST PLAT, CO B, 2D RECON BN	1	23		1
2D PLAT, CO B, 2D TANK BN	1	34		
3D PLAT, CO, 2D AMTRAC BN	1	44		1
DET, RADAR BEACON TEAM		2		
LOGISTICAL SUPPORT UNIT 32	12	145	2	26
(MAJOR W. P. FINNEGAN)				
DET, 2D SERVICE BN				
DET, 2D FSR				
1ST PLAT, CO A, 2D SP BN				
DET, 2D MED BN				
1ST PLAT, CO C, 8TH MT BN				
PROV MAG-60 (LTCOL J. W. ALBER)	2	1		
HMM-162 (-) (REIN)	44	185	1	2
DET, MASS-1	2	4		
TOTALS	126	1572	6	63

SHIPPING

USS GUAM	(LPH-9)
USS NASHVILLE	(LPD-13)
USS SPIEGEL GROVE	(LSD-32)
USS NEWPORT	(LST-1179)

AIRCRAFT

12/CH-46F
4/CH-53D
2/UH-1E

ARMS & EQUIPMENT

1	LVTP-5 CMD
10	LVTP-5
6	105MM HOWITZER
7	M48 TANKS
8	106MM RR
8	TRUCKS W/106MM RR
8	81 MM MORTARS
8	FLAME THROWERS
40	TRAILER CARGO
22	TRAILER, CARGO M-105
3	TRAILER, CARGO 3/4 TON
6	TRAILER, TANK
9	TRAILER, TANK WATER ½ TON
3	SEMI-TRAILER, 12 TON
2	DOLLY TRAILER CONVERTER
4	TRUCK UTILITY MRC-83
7	TRUCK UTILITY MRC-109
2	TURCK UTILITY MRC-124
41	TRUCK UTILITY ¼ TON
1	TRUCK M-715 W/ VAN ELECTRIC
1	TRUCK, TRACTOR 5 TON
4	TRUCK, CARGO 5 TON
30	TRUCK PLATFORM UTILITY ½ TON
5	TRUCK, DUMP 5 TON
3	TRUCK, AMBULANCE 1¼ TON
2	TRUCK, AMBULANCE ¼ TON
3	TRUCK, CARGO 3/4 TON
1	TRUCK, 2½ TON
39	TRUCK, CARGO 2½ TON
2	TRUCK, WRECKER 5 TON
1	TRUCK, LIFT FORK, ROUGH TERRAIN
3	TRUCK, TANK GASOLINE, 1200 GAL
2	CRAWLER CRANE
4	BULLDOZER
1	CRANE M60
4	EIMCO TRACTOR
6	TRACTOR MED
1	AMBULANCE 3/4 TON
1	JEEP AMBULANCE ¼ TON
1	FORK LIFT
1	STEAM TRAILER
2	FLOOD LIGHT TRAILER
1	ERDLATOR WATER DIST EQUIP SET 600 GP
1	FLR 5 KW GENERATOR
2	BLADDERS, 10,000 GALS
2	BATH UNITS
2	GENERATOR SET
2	COMPRESSOR
1	TRUCK, M35 W/ WELDER
1	MINE DETECTOR

* SEE TAB 31 FOR PRESENT LOCATIONS.
PROV MAG-60 ALSO INCLUDES VMFA-251 AND VMA (AW)-121 (OPCON TO MAG-32 AND MAG-14 RESPECTIVELY) WHICH ARE ON CONUS STANDBY FOR CONTINGENCY OPERATIONS.

LANDING FORCE, CARIBBEAN 1-71 *

11 AUGUST 1971

UNITS EMBARKED	STRENGTH			
TASK GROUP 45.9	USMC		USN	
	OFF	ENL	OFF	ENL
BLT 1/6				
(LTCOL T. F. QUALLS)				
1ST BN, 6TH MARINES	35	834	2	31
DET, HQCO, 6TH MARINES				
DET, HQ BTRY, 2D BN, 10TH MAR				
BTRY D, 2D BN, 10TH MAR	6	108	1	2
PLAT, CO A, 2D RECON BN	1	23		
PLAT, CO B, 2D ENGR BN	1	30		
PLAT, CO A, 8TH MT BN	1	22		
PLAT, CO A, 2D SP BN	1	39		
PLAT, CO B, 2D TANK BN	1	28		
PLAT, CO B, 2D AMTRAC BN	1	43		
DET, HQBN, 2D MARDIV	1	14		
DET, 2D SERVICE BN	1	38		
DET, 2D FSR	1	36		
DET, 2D MED BN		8		10
DET, 2D DENTAL CO			1	1
TOTALS	50	1223	4	44

SHIPPING

USS FRANCIS MARION	(LPA-249)
USS CHARLESTON	(LKA-113)
USS SAN MARCOS	(LSD-25)
USS YORK COUNTY	(LST-1175)

AIRCRAFT

ARMS & EQUIPMENT

6	105MM HOW
11	LVTP
8	106MM RR
8	81MM MORTAR
5	M-48 TANKS
30	TRAILER ¼T
16	TRAILER 1¼T
1	TRAILER 3/4T
4	TRAILER, WATER
3	TRAILER (M-101) 3/4T
3	SEMI-TRAILER 12T
3	TRUCK UTILITY MRC-83
6	TRUCK UTILITY MRC-109
2	TRUCK UTILITY MRC-124
3	TRUCK, DUMP 5T
3	TRUCK, CARGO 3/4T
35	TRUCK, CARGO 2½T
3	SEMI TRUCK 12T
1	TRUCK, SHOP SET
1	TRUCK 5T
1	AMBULANCE ¼T
1	AMBULANCE 3/4T
30	JEEP ¼T
32	MULES
2	FUEL TANKER
2	TRACTOR 5T
2	WRECKER
1	CRANE M-60
2	CRAWLER CRANE
1	TRUCK CRANE
5	CRAWLER TRACTOR
2	ROUGH TERRAIN FORK LIFT
1	STEAM CLEANING UNIT
1	TRAILER, BATH UNIT
1	FLOODLIGHT SET
1	GENERATOR
2	DOLLY TRAILER CONVERTER

Unclassified

* SEE TAB 31 FOR PRESENT LOCATION.
38TH MAU HQ (COL F. R. KRAINCE), PROV MAG-80 INCLUDING AN HMM, VMA, VMFA, AND DET, MASS ARE ADMINISTRATIVELY ASSIGNED AND ARE ON CONUS STANDBY FOR CONTINGENCY OPERATIONS.

UNCLASSIFIED

TAB 36-1

CONFIDENTIAL UNCLASSIFIED

MARINE CORPS COMMAND CENTER

GUANTANAMO BAY BATTALION (REIN)*

11 AUGUST 1971

UNITS	STRENGTH**				ARMS & EQUIPMENT
	USMC		USN		
	OFF	ENL	OFF	ENL	
2D BN (REIN), 8TH MARINES					5 M-103 TANKS 7 M48 TANKS 2 M67 TANKS (FLAME) 8 106MM RR 8 81 MORTAR 6 155 HOW TD# 4 105 HOW TD# 6 106MM RR# 8 81 MORTAR#
LTCOL O. O. PAREDES					
2D BN, 8TH MARINES	29	678	3	19	
BTRY B, 1ST BN, 10TH MAR	6	132		3	
2D TANK BN (2 PLATS)	1	35			
DET, 2D FSR (LSU)		18			
PLAT, 2D ANGLICO	3	45	3		
DET, 2D DENTAL CO			1	1	
TOTALS	39	908	7	23	

*SEE TAB 31 FOR LOCATION.
**MARES FORSTAT OF 2AUG71.
#USN OWNED AND USMC OPERATED.

TAB 36-2

CONFIDENTIAL UNCLASSIFIED

Unclassified

UNCLASSIFIED

Department of Defense

NUMBER OF CASUALTIES INCURRED BY U. S. MILITARY PERSONNEL
IN CONNECTION WITH THE CONFLICT IN VIET-NAM

Cumulative from January 1, 1961 through July 31, 1971

11 AUGUST 1971

	Army	Navy *	Marine Corps	Air Force	Total
A. CASUALTIES RESULTING FROM ACTIONS BY HOSTILE FORCES					
1. Killed	25,091	1,050	11,465	455	38,061
2. Wounded or Injured					
a. Died of wounds	3,486	140	1,449	44	5,119
b. Nonfatal wounds					
Hospital care required	95,826	4,080	51,356	807	152,069
Hospital care not required	103,752	5,834	37,161	2,295	149,042
3. Missing					
a. Died while missing	1,632	182	5	393	2,212
b. Returned to control	48	7	6	26	87
c. Current missing	262	113	81	557	1,013
4. Captured or Interned					
a. Died while captured or interned	15	-	3	1	19
b. Returned to control	56	3	5	6	70
c. Current captured or interned	62	144	23	236	465
5. Deaths					
a. From aircraft accidents/incidents					
Fixed Wing	88	155	139	693	1,075
Helicopter	2,212	62	429	59	2,762
b. From ground action	27,924	1,155	12,354	141	41,574
TOTAL DEATHS a/	30,224	1,372	12,922	893	45,411
B. CASUALTIES NOT THE RESULT OF ACTIONS BY HOSTILE FORCES					
6. Current Missing	131	1	12	-	144
7. Deaths					
a. From aircraft accidents/incidents					
Fixed Wing	248	172	45	277	742
Helicopter	1,692	52	242	18	2,004
b. From other causes	4,693	604	1,391	261	6,949
TOTAL DEATHS	6,633	828	1,678	556	9,695

a/ Sum of lines 1, 2a, 3a and 4a.

*Navy figures include a small number of Coast Guard casualties.

Department of Defense
OASD (Comptroller)
Directorate for Information Operations
August 4, 1971

TAB 45-2

UNCLASSIFIED

Unclassified

UNCLASSIFIED

MARINE CORPS COMMAND CENTER

11 AUGUST 1971

DISPOSITION AND STRENGTH OF MAJOR US AND FW FORCES IN RVN

DISPOSITION

MR RECAP

	MR I*	XXIV CORPS
	220 MILES LENGTH@	30-75 MILES WIDTH
	14,600 SQ MI AREA	2,860,300 CIV POP
		101ST ABN DIV (AM)
USA	19 BNs	23D INF DIV(AMERICAL)
ARVN	36 BNs	2D ROKMC BDE
ROKMC	4 BNs	147TH VNMC BDE
VNMC	5 BNs	258TH VNMC BDE
ARVN CAV	4 BNs	1ST ARVN DIV
		2D ARVN DIV
	TOTAL 68 BNs	
	MR II*	SRAG (NHA TRANG)
	315 MILES LENGTH@	45-130 MILES WIDTH
	31,300 SQ MI AREA	2,898,200 CIV POP
USA	4 BNs	173D ABN BDE
ARVN	31 BNs	ROK CAP INF DIV
ROK	18 BNs	9TH ROK DIV
ARVN CAV	3	22D ARVN DIV
	TOTAL 56 BNs	23D ARVN DIV
	MR III*	TRAC (LONG BINH)
	90 MILES LENGTH@	55-115 MILES WIDTH
	10,100 SQ MI AREA	5,133,000 CIV POP
USA	5 BNs	2D BDE, 25TH INF DIV
ARVN	55 BNs	1ST AUSTRALIAN TF
AUSTRALIA	2 BNs	ROYAL THAI VOL REGT
THAILAND	4 BNs	1ST CAV DIV (AM)
ARVN CAV	5 BNs	5TH ARVN DIV
VNMC	4 BNs	18TH ARVN DIV
		25TH ARVN DIV
	TOTAL 75 BNs	369TH VNMC BDE
		1ST ARVN ABN DIV
	MR IV*	DRAC (CAN THO)
	195 MILES LENGTH@	35-115 MILES WIDTH
	14,600 SQ MI AREA	5,700,1000 CIV POP
ARVN	41 BNs	7TH ARVN DIV
ARVN CAV	5 BNs	9TH ARVN DIV
		21ST ARVN DIV
	TOTAL 46 BNs	

@ Coastal Arc
# Includes 3 RGR Bns
* See RVN Recap note

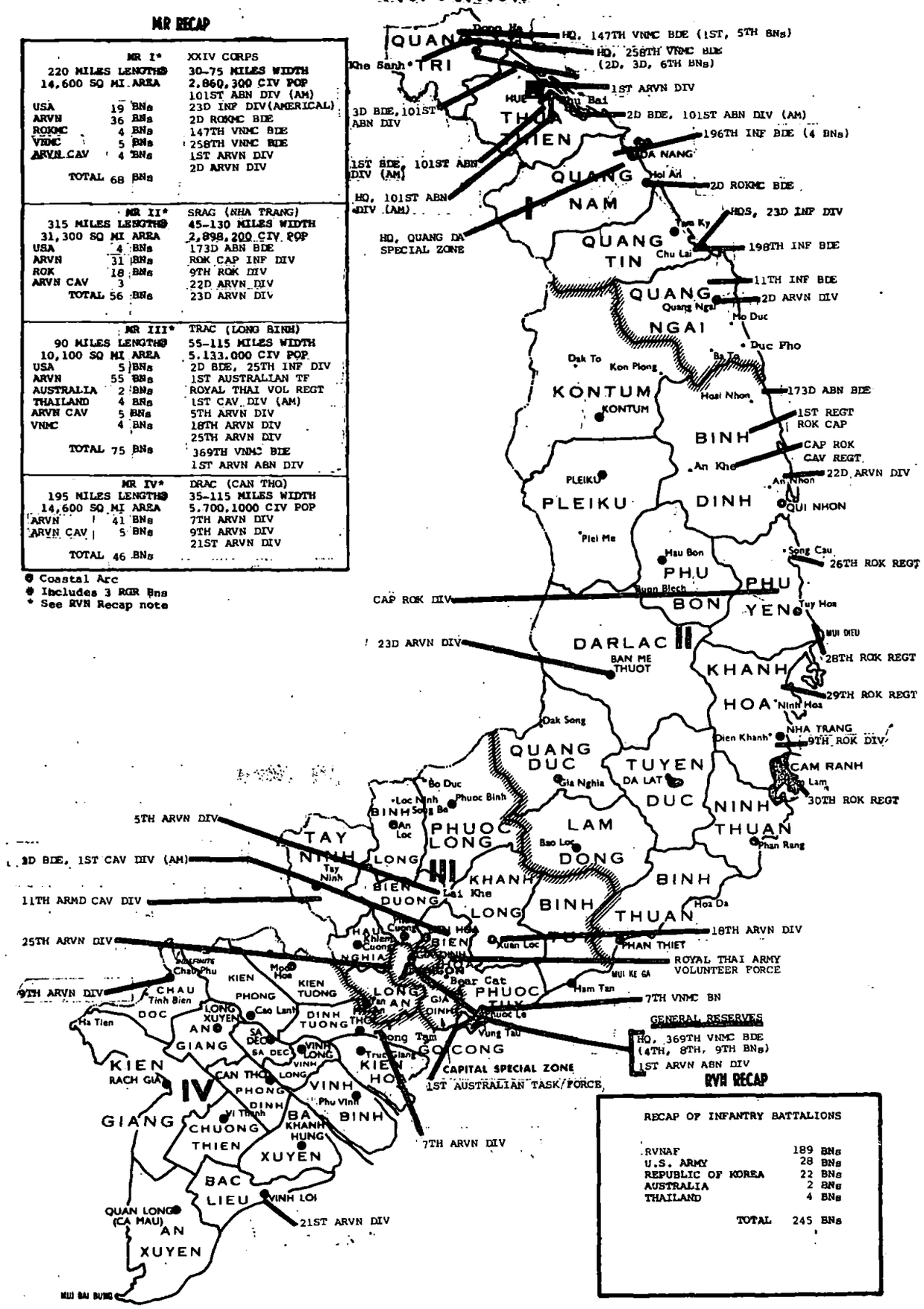

RVN RECAP

RECAP OF INFANTRY BATTALIONS

RVNAF	189 BNs
U.S. ARMY	28 BNs
REPUBLIC OF KOREA	22 BNs
AUSTRALIA	2 BNs
THAILAND	4 BNs
TOTAL	245 BNs

TAB 46-1

Unclassified
UNCLASSIFIED

[redacted]AL

UNCLASSIFIED

MARINE CORPS COMMAND CENTER

STRENGTHS★

11 AUGUST 1971

RVN ARMED FORCES (RVNAF)

ARMY (ARVN)	412,705
NAVY (VNN)	41,184
AIR FORCE (VNAF)	50,245
MARINE CORPS (VNMC)	13,806
REGIONAL FORCES (RF)	295,019
POPULAR FORCES (PF)	247,638
TOTAL RVNAF	1,060,597

UNITED STATES FORCES

ARMY	177,284
NAVY	10,337
AIR FORCE	36,214
MARINE CORPS	547
COAST GUARD	98
TOTAL U.S.	224,480

FREE WORLD MILITARY ASSISTANCE FORCES (FWMAF)

REPUBLIC OF KOREA	48,472
AUSTRALIA	6,162
PHILIPPINES	83
THAILAND	9,493
NEW ZEALAND	273
REPUBLIC OF CHINA	31
SPAIN	7
TOTAL FWMAF	64,521

TOTAL FORCES IN RVN 1,349,598

★ SOURCE: RVNAF - MACV MONTHLY RPT OF GVN STRENGTH AS OF 31MAY71.
ALL OTHERS - MACV WEEKLY STRENGTH RPT AS OF 2400, 5AUG71.

UNCLASSIFIED

Unclassified

TAB 46-2

[redacted]

[redacted]

MARINE CORPS COMMAND CENTER

UNCLASSIFIED

REPUBLIC OF KOREA MARINE CORPS

11 AUGUST 1971

Commandant: General LEE, BYUNG MOON

Senior Marine Advisor: Colonel Howard T. PITTMAN, USMC

Strength: 32,360 (JUN71)

The Headquarters of the Republic of Korea Marine Corps (ROKMC) is located in Seoul. Marine Barracks are located in Seoul and the major Naval Bases at Inchon, Mokpo, Chejudo, Chinhae, Pusan, and Mukho. The ROKMC Supply and Maintenance Depot as well as the ROK Marine Schools Base are located at Chinhae. The Schools Base offers Recruit Training, NCO School, Supply School, LVT School, Officer Candidate Course, Drill Instructor School, Senior Amphibious Warfare School, English Language Training, and the ROKMC Command and Staff College. The ROK Marine Corps Amphibious Base at Pohang houses the 1st ROKMC Division (-), Special Training Unit to support ROK Marine personnel assigned to the 2d ROKMC Brigade (Blue Dragons) in Vietnam. The ROKMC is operationally organized as indicated below:

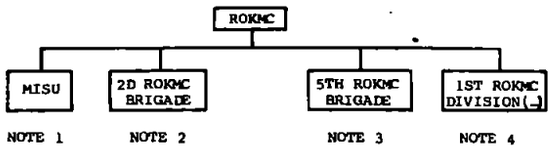

NOTE 1: Marine Island Security Unit (MISU) is a defense force approximating a reinforced Infantry Battalion in size and weaponry. It is located on the offshore islands of the Westerly extension of the DMZ mandated to the United Nations. Although it is administratively controlled by HQ, ROKMC, it is under the operational control of Commander, ROK Fleet. The organization of the MISU is indicated on Chart 1.

NOTE 2: The 2d ROK Marine Brigade is deployed to the Republic of Vietnam and organization is indicated on Chart 2.

NOTE 3: The 5th ROK Marine Brigade is currently deployed in a defensive role along the DMZ on the Kimpo Peninsula. It is administratively controlled by HQ, ROKMC but is under the operational control of I Corps (Group), Eighth U. S. Army. It is considered the Brigade would be fixed in position in the event of open hostilities in Korea and could not be readily redeployed without major adjustment in combat unit locations within the the United Nation Command during peacetime. The Brigade was initially formed from the assets of the list ROKMC Division and represents those units which the division is minus at this time. The current organization of the 5th Brigade is indicated on Chart 3.

NOTE 4: The 1st ROKMC Division (-) located at Pohang is administratively controlled by HQ, ROKMC and under the operational control of Commander, Naval Forces Korea. It is designated as the strategic Reserve for the Defense of the ROK. The organization for the Division (-) is indicated on Chart 4. It should be noted that the Amphibian Tractor Battalion is presently equipped with the LVT-3C.

MARINE ISLAND SECURITY UNIT (MISU)

COMMANDING OFFICER:
BGEN HUR HONG

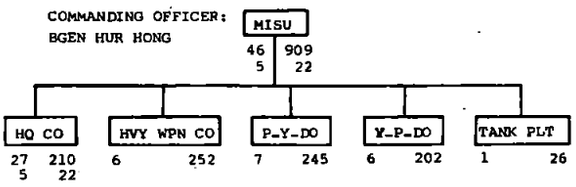

CHART #1

5TH ROK MARINE BRIGADE

COMMANDING GENERAL:
BGEN KIM, Suk Ku

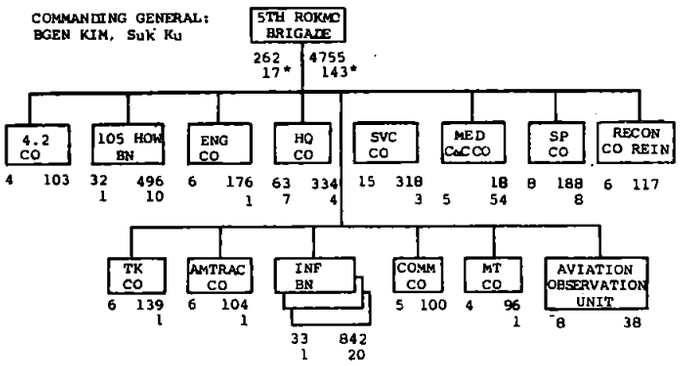

CHART #3

2D ROK MARINE BRIGADE

Strength: 6,155 (AUG71)

COMMANDING GENERAL:
MGEN LEE, Dong Yong

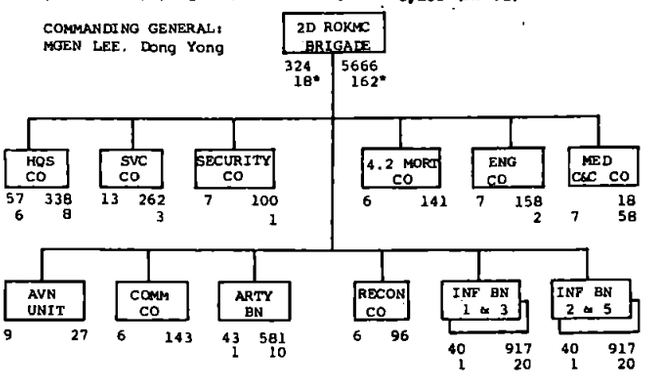

CHART #2

FIRST ROK MARINE DIVISION (-)

COMMANDING GENERAL:
MGEN KIM, YUN SANG

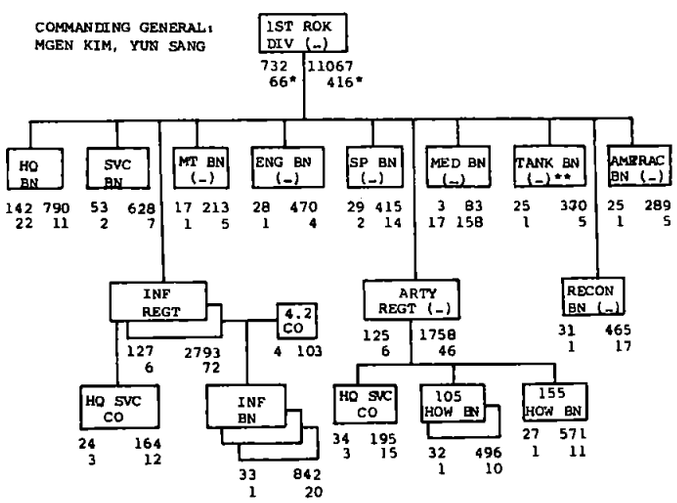

CHART #4

* Second line of figures under each block indicates ROK Navy personnel.
** Minus includes 1 Co Tanks assigned 5th Brigade and 1 Platoon Tanks attached MISU.

Unclassified

UNCLASSIFIED [redacted]

TAB 48-1

[redacted]LASSIFIED

MARINE CORPS COMMAND CENTER

TABLE OF CONTENTS

18 AUGUST 1971

	LIST OF EFFECTIVE TASS	DATE OF LATEST CHANGE
SECTION I - MARINE CORPS FORCES - WORLD WIDE		
ALLOCATION OF MARINE CORPS PERSONNEL	11	28JUL71
SELECTED PERSONNEL AND AIRCRAFT DATA	12	1[illegible]UG71●
UNITED STATES MARINE CORPS RESERVE	13-1	30DEC70
	13-2	23DEC70
	13-3	4AUG71
	13-4	23DEC70
MISCELLANEOUS NON-FMF UNITS	14-1	14JUL71
(MARINE BARRACKS)	14-2	30JUN71
(MARINE SECURITY GUARD BATTALION)	14-3	14APR71
(MARINE DETACHMENTS AFLOAT)	14-4	14APR71
	14-5	30JUN71
SECTION II - STATUS OF FLEET MARINE FORCES		
STATUS OF FMF UNITS	21-1	11AUG71
	21-2	18AUG71●
	21-3	18AUG71●
	21-4	18AUG71●
	21-5	11AUG71
	21-6	18AUG71●
	21-7	11AUG71
	21-8	11AUG71
	21-9	18AUG71●
RECAPITULATION OF FMF ACTUAL STRENGTHS	22	11AUG71
DISTRIBUTION OF MAJOR GROUND EQUIPMENT AND AIRCRAFT	23	18AUG71●
SECTION III - DISPOSITION OF FLEET MARINE FORCE UNITS		
FLEET MARINE FORCE DISPOSITION, DISTRIBUTION BY BATTALION/ SQUADRON AND MOVEMENTS	31-1	18AUG71●
	31-2	18AUG71●
FMF PACIFIC UNIT LOCATIONS AND STRENGTHS (MIDPAC/EASTPAC)	32	11AUG71
FMF PACIFIC UNIT LOCATIONS, STRENGTHS AND OSD CEILING CONSIDERATIONS (WESTPAC)	33	18AUG71●
LANDING FORCES - 7TH FLEET	34	18AUG71●
FMF ATLANTIC UNIT LOCATIONS AND STRENGTHS	35	11AUG71
LANDING FORCES - MEDITERRANEAN AND CARIBBEAN	36-1	11AUG71
GUANTANAMO BAY BATTALION	36-2	11AUG71
SECTION IV - GENERAL		
CHRONOLOGY OF SIGNIFICANT EVENTS	41-1	17MAR71
	41-2	21APR71
	41-3	23JUN71
	41-4	16JUN71
	41-5 MISSING	18AUG71
STATISTICAL SUMMARY OF III MAF OFFENSIVE OPERATIONS IN VIETNAM	42-1	21APR71
	42-2	18NOV70
	42-3	18NOV70
	42-4	10MAR71
	42-5	12MAY71
	42-6	12MAY71
LANDING FORCES - 7TH FLEET; SUMMARY OF OPERATIONS IN RVN	43-1	18NOV70
	43-2	18NOV70
	43-3	18NOV70
U.S. MARINE CORPS AIRCRAFT LOSSES IN SEASIA	44-1	18NOV70
	44-2	18NOV70
	44-3	18NOV70
	44-4	18NOV70
	44-5	18NOV70
	44-6	18NOV70
	44-7	18NOV70
	44-8	18NOV70
	44-9	25NOV70
	44-10	5MAY71
	44-11	5MAY71
USMC/ENEMY CASUALTIES IN RVN; CUMULATIVE DOD CASUALTY FIGURES ON U.S. MILITARY PERSONNEL AND COMPARATIVE USMC/ENEMY KIA IN CONNECTION WITH THE CONFLICT IN RVN	45-1	28JUL71
	45-2	18AUG71●
	45-3	26MAY71
	45-4	4AUG71
DISPOSITION AND STRENGTH OF MAJOR U.S. AND FW FORCES IN RVN	46-1	18AUG71●
	46-2	18AUG71●
COMUSMACV STAFF, PRINCIPAL MARINE OFFICERS HQ MACV	47	7JUL71
REPUBLIC OF KOREA MARINE CORPS	48-1	18AUG71●
REPUBLIC OF VIETNAM MARINE CORPS	48-2	7JUL71
VIETNAM GEOGRAPHIC AND CLIMATE DATA	49-1	18NOV70
	49-2	18NOV70
CHRONOLOGY OF FMF DEPLOYMENT AND STRENGTH IN RVN	410-1	20JAN71
	410-2	25NOV70
	410-3	25NOV70
	410-4	25NOV70
	410-5	25NOV70
	410-6	25NOV70
	410-7	9DEC70
	410-8	10MAR71
	410-9	19MAY71
	410-10	23JUN71
	410-11	12JUL71
	410-12	[illegible]

CONTENTS OF THIS PUBLICATION
DOWNGRADED AT 3 YEAR INTERVALS
DECLASSIFIED AFTER 12 YEARS
DOD DIR 5200.10

Unclassified

[redacted]

UNCLASSIFIED

MARINE CORPS
AUG 19 1974
REFERENCE BRANCH

Unclassified

CONFIDENTIAL

MARINE CORPS COMMAND CENTER

UNCLASSIFIED

SELECTED PERSONNEL AND AIRCRAFT DATA

PERSONNEL

18 AUGUST 1971

		STRENGTH	PERCENT USMC	PERCENT FMF	PERCENT FMFPAC
USMC TOTAL	*	211,301	100.00		
FLEET MARINE FORCES		98,835	46.77	100.00	
FMF ATLANTIC	#	38,064	18.01	38.51	
FMF PACIFIC	#	60,771	28.76	61.49	
VIETNAM	¢	574	00.27		

SOURCE: * HQMC 1080-20 (ESTIMATED PERSONNEL DATA) AS OF 31JUL71.
MARES FORSTAT REPORT DATED 2AUG71.
¢ MACV WEEKLY STRENGTH REPORT AS OF 12AUG71.

AIRCRAFT

11 AUGUST 1971

		FIXW	HELO	TOTAL	PERCENT USMC	PERCENT FMF	PERCENT FMFPAC
USMC TOTALS	**	771	607	1,378	100.00		
FLEET MARINE FORCES	@	695	566	1,261	91.51	100.00	
FMF ATLANTIC	@	324	275	599	43.47	47.50	
FMF PACIFIC	@	371	291	662	48.04	52.50	

SOURCE: ** DC/S AIR STATUS BOARD PHOTO AS OF 10AUG71.
@ MARES FORSTAT REPORT DATED 2AUG71.

TAB 12

CONFIDENTIAL

Unclassified

UNCLASSIFIED

[redacted] UNCLASSIFIED

MARINE CORPS COMMAND CENTER

STATUS OF FMF UNITS **

18 AUGUST 1971

UNIT *	NOTE	UNIT COMMANDER	LOCATION	STRENGTH USMC	STRENGTH USN	UNIT READINESS ☆ CURRENT RATE	RSN	P	S	R	T	EXPECTED RATE	BY	MAJOR EQUIPMENT
4TH MARINES	24	COL R. J. PERRICH	CP HANSEN			C2	T	2	1	1	2	C2	720601	
HQCO		CAPT S. M. HARTNETT		203	8	C2	T	1	1	1	2	C2	720601	
1STBN	1	LTCOL D. G. ROBISON		978	46	C2	P	2	1	1	2	C1	710825	8/106MM RR, 8/81 MORT
2DBN		LTCOL J. PHILLIPS		991	37	C2	R	2	1	2	2	C1	710910	8/106MM RR, 8/81 MORT
3DBN	30	LTCOL A. J. CASTELLANA	FUJI	988	42	C2	P	2	1	1	2	C1	710930	8/106MM RR, 8/81 MORT
9TH MARINES		COL R. T. LAWRENCE	CP SCHWAB			C2	T	1	1	1	2	C1	710805	
HQCO		CAPT M. H. CRAFTON JR.		238	5	C2	R	1	1	2	2	C1	710930	
1STBN		LTCOL F.W.M.WOODROW JR.		1028	34	C2		2	1*	2	1	C1	710915	8/106MM RR, 8/81 MORT
2DBN (31ST MAU)	2*	LTCOL F. J. JOHNSON JR.	31ST MAU	1060	40	C1		1	1	1	1			8/106MM RR, 8/81 MORT
3DBN		LTCOL B. S. SNELL	CP SCHWAB	976	40	C2	P	2	1	2	2	C1	711115	7/106MM RR, 8/81 MORT
12TH MARINES (-)		COL J. P. O'CONNELL	CP HANSEN			C2	T	2	1	1	2	C1	710805	
HQ BTRY (-)		CAPT D. J. LABOISSIERE		221	7	C2	R	1	1	2	2	C1	710905	
2DBN		LTCOL E. D. LITZENBERGER		516	16	C2	T	2	1	1	2	C2	711205	18/105 HOW TD
3DBN	30	LTCOL W. J. HALLISEY		467	15	C2	T	2	1	1	2	C2	711205	18/105 HOW TD
4THBN (-) (REIN)		LTCOL K. G. PATTERSON		479	12	C2	P	2	1	2	2	C2	711201	1/M51 VTR, 17/155 HOW SP
3D PLAT, 1ST 8" HOW BTRY	4													2/8" HOW SP
3D SERV BN (-)		COL D. J. HUNTER	CP HANSEN	769	27	C2	T	1	1	1	2	C1	710825	
3D TANK BN (-)		LTCOL C. R. STIFFLER		573	16	C2	T	2	1	1	2	C2	720601	53/M48 TANK, 5/M51 VTR 8/M67 TANK
9TH MT BN (-)		MAJ M. F. SCANLON		295	9	C2	T	1	1	1	2	C2	711114	
3D MED BN (-)		LTCOL F. E. CLARK JR.		137	199	C3	S	3	3	3	2	C2	711001	
1ST HOSPITAL CO (CADRE)		LTJG J. W. VRABEL (USN)		23	23	C4	P	4	1	2	4	C4	711231	
3D MT BN (-)		MAJ B. L. PARKS	CP SCHWAB	133	6	C2	T	1	1	1	2	C2	720601	
3D RECON BN (-)		LTCOL T. R. STUART		362	24	C2	T	1	1	1	2	C1	711001	
3D ENGR BN (-) (REIN)	17	LTCOL C. R. GIBSON		684	8	C2	P	2	1	2	2	C1	711001	
CO D (REIN), 7TH ENGR BN(-)		CAPT H. L. CAMPBELL	CP HAGUE	141		C3	P	3	2	2	2	C2	711201	
BRIDGE PLAT, 1ST BRIDGE CO		1STLT R. M. RAPP		18										
7TH COMM BN (-)		LTCOL M. W. MCCOURY	CP SCHWAB	463	8	C2	T	2	1	2	2	C2	720601	
3D SP BN (-)		LTCOL R. L. ANDERTON	CP HAGUE	380	36	C2	T	1	1	2	2	C2	720701	
1ST AMTRAC BN (-)		LTCOL J. G. BUCKMAN	CP SCHWAB	596	10	C2	P	2	2	2	2	C1	710905	3/LVTE-1, 9/LVTP-5 CMD, 76/LVTP-5, 3/LVTR
1ST MAW (III MAF)	*	MAJGEN R. G. OWENS JR.	IWAKUNI	8913	155	C2	R	2	2	2	2	C2	711001	
JAPAN (1ST MAW ELEMENTS)				5854	124									
MWHS-1		COL W. C. KELLY	IWAKUNI	819	22	C2	S	1	2	2	2	C1	710801	
7TH CIT (1ST MAW)	*	WO J. A. CANONICO		20		C1		1	1	1	1			
11TH FORCE DENTAL CO (-)		CDR J. J. LYONS (USN)		2	32	C1		1	1	1	1			
3D SSCT		CAPT G. G. MEYERS		10		C2	X	1	1	1	1	C1	710801	
MACG-18 (-)		COL E. M. JONES	IWAKUNI			C2	R	2	1	2	2	C2	711021	
H&HS-18 (-)		MAJ L. E. OBENHAUS		190		C2	R	2	2	2	2	C1	710901	
MASS-2 (-)		LTCOL T. G. DAVIS		184		C2	R	1	2	2	2	C1	711110	
MWCS-18		MAJ R. S. KAYE		292		C2	P	2	2	2	2	C2	711021	
MAG-12		COL E. J. RUTTY	IWAKUNI			C2	R	2	2	2	1	C2	711001	
H&MS-12		LTCOL K. D. CURRY JR.		550		C2	R	1	1	2	2	C2	711020	
MABS-12		LTCOL J. L. DRIEFER		377	20	C2	R	2	1	2	2	C2	711031	
MATCU-62 (MAG-12)	*	CAPT A. E. PETERS		39		C4	P	4	1	1	2	C3	711001	
VMA-211		LTCOL D. G. GASCOIGNE		211	1	C2	R	2	2	2	1	C2	711030	19/A-4E
VMA-311		LTCOL K. L. BATT		186	1	C2	P	2	2	2	1	C2	711002	24/A-4E
VMA(AW)-533	7	LTCOL R. P. SPRIER	NAHA	249		C2	R	2	1	2	1	C2	711001	12/A-6A
OTHER														
SU 2, H&MS-36			FUJI	7	17									3/CH-46D

* PARENTHETIC UNIT INDICATES OPCON WHEN DIFFERENT FROM ORGANIZATIONAL STRUCTURE.

TAB 21-2

Unclassified [redacted]

UNCLASSIFIED

UNCLASSIFIED

MARINE CORPS COMMAND CENTER

STATUS OF FMF UNITS **

10 AUGUST 1971

UNIT *	NOTE	UNIT COMMANDER	LOCATION	STRENGTH USMC	STRENGTH USN	UNIT READINESS ☆ CURRENT RATE	RSN	P	S	R	T	EXPECTED RATE	BY	MAJOR EQUIPMENT
MAG-15		COL R. R. MILLER	IWAKUNI			C2	T	2	2	2	2	C1	710915	
H&MS-15		MAJ M. P. CADY		554		C2	R	1	1	2	1	C1	711001	4/TA-4F
MABS-15		MAJ R. L. BECKWITH		368	21	C2	R	2	1	2	2	C2	710731	
MATCU-60 (MAG-15)	*	1STLT C. R. HICKEY		56		C2	P	2	1	1	2	C1	710801	
VMFA-115		LTCOL R. R. POWELL	CUBI PT.	289	1	C2	T	2	2	2	2	C2	711001	14/F-4B
VMFA-232		LTCOL J. S. ROSENTHAL	IWAKUNI	318	1	C2	T	2	1	2	2	C1	710815	16/F-4J
VMCJ-1 (1ST MAW)	*	LTCOL S. S. EISENHAUER		341	1	C3	X	2	1	2	4	C2	711006	6/EA-6A, 9/RF-4B
MWSG-17		COL W. G. MCCOOL	IWAKUNI			C3	R	1	2	3	2	C2	710801	
H&MS-17		LTCOL W. R. LIMBACH		568	7	C3	R	1	2	3	2	C2	710901	4/C-117D, 3/C-54Q/R/S
WERS-17 (-)		MAJ A. L. FRUCCI		224		C2	R	1	2	2	2	C1	710815	
OKINAWA (1ST MAW ELEMENTS)				3059	31									
MAG-36		COL R. J. ZITNIK	FUTEMA			C2	R	1	2	2	1	C2	710924	
H&MS-36 (-)		LTCOL D. A. SPURLOCK		576		C2	S	1	2	2	1	C1	710901	9/CH-46D, 6/UH-1E
SU 1, H&MS-36 (-)		MAJ F. W. CRONE		51		C2	R	1	1	2	1	C1	710911	4/AH-1J
MABS-36		LTCOL V. J. GUINEE JR.		521	24	C2	R	2	1	2	2	C1	710830	
MATCU-66 (MAG-36)	*	CAPT K. R. CLARK		56		C2	P	2	1	2	2	C2	710925	
MATCU-68 (MAG-36)	*	WO L. R. COXE		16		C4	P	4	2	2	4	C4	711015	
HMM-164 (31ST MAU)	2*	LTCOL A. J. KETTERING	31ST MAU	285	3	C2	R	1	2	2	1	C1	710815	13/CH-46D, 4/CH-53D, 4/UH-1E
HMM-165		LTCOL P. L. MOREAU	FUTEMA	254		C2	R	1	2	2	1	C1	710810	20/CH-46D
HMH-462 (-)	2	MAJ J. W. ROBERTS		262	1	C2	R	1	1	2	1	C1	710901	17/CH-53D
VMO-6 (-)	28	LTCOL J. L. NORTON		206		C2	R	1	2	2	1	C1	710901	11/OV-10A
VMGR-152 (1ST MAW)	*	LTCOL R. W. DAUPHINEY		293	1	C4	R	2	4	4	3	C3	710831	6/KC-130F
HML-367 (-)		MAJ R. SANCHO		167		C1		1	1	1	1			12/UH-1E
OTHERS														
DET, MASS-2 (-)			FUTEMA											
SU 1, WERS-17 (-)	12	WO E. Q. HICKS		51		C1		1	1	1	1			
SU 1, H&MS-12 (-)	27	CAPT J. A. MILLER	NAHA	49		C2	S	1	2	2	1	C1	710730	
MACS-4		LTCOL R. D. MILLER	FUTEMA	272	2	C3	T	2	1	2	3	C2	710923	
3D FSR		COL R. E. ROEDER JR.	CP FOSTER	3105	51	C3	S	2	3	3	2	C2	710915	
H&S BN		LTCOL J. B. HARRIS SR.		890	25	C3	R	2	3	3	2	C2	710915	
SUPPLY BN		LTCOL J. W. FRIBERG		1212	26	C3	S	2	3	2	2	C2	710915	
NOP, 3D FSR (3D FSR)	*	CAPT C. W. SHIVER		45		C1		1	1	1	1			
MAINT BN		LTCOL H. I. FREY		958		C3	S	2	3	3	2	C2	710915	2/LVTE-1, 1/106MM RR, 1/81 MORT
EASTPAC				28537	866									
FMFPAC														
I MAF		BGEN R. T. DWYER JR.	CAMPEN	21		C3	X	2	4	4	2	C2	710901	
1ST MAR DIV (-) (REIN)		BGEN R. T. DWYER JR.	CAMPEN	14348	524	C4	P	4	2	3	4	C4	711001	
HQBN		COL R. N. BURHANS		1780	60	C4	P	4	2	2	4	C4	711001	3/81 MORT
1ST CIT		CAPT B. B. VORONIN		20		C1		1	1	1	1			
5TH ITT	14	CAPT R. A. KAROLY				C3	P	3	1	1	3	C3	710901	
9TH ITT	14	CAPT L. J. JANSEN				C1		1	1	1	1			
19TH ITT	14	1STLT G. D. JENNINGS				C4	P	4	1	1	4	C4	711101	
21ST ITT	14	2DLT M. M. LINCOLN				C4	P	4	1	1	4	C3	711001	
23D ITT	14	CAPT R. D. TOMLIN				C1		1	1	1	1			
25TH ITT	14	CAPT H. K. LEE				C4	P	4	1	1	4	C4	711001	
2D SSCT		WO E. L. HANEY		8		C4	R	1	1	4	1	C3	710901	
SCAMP		CAPT A. L. SELLECK JR.		24										
COMM SPT CO, 9TH COMM BN (-)		CAPT D. B. DOWNING		299		C2	R	1	1	2	1	C2	711001	
1ST CIVIL AFFAIRS GRP (CADRE)		CAPT R. S. GRISCHKOWSKY		23		C4	P	4	1	1	4	C4	711001	
1ST MARINES		LTCOL M. A. MOORE				C4	S	3	4	4	3	C3	711001	
HQCO		CAPT H. W. GARDNER		186	10	C3	S	2	3	3	2	C2	711101	
1ST BN		LTCOL C. A. BARSTOW		1258	10	C4	R	3	3	4	3	C3	711001	8/106MM RR, 8/81 MORT
2D BN		LTCOL A. LUKEMAN		1055	17	C4	S	2	4	3	2	C3	711001	8/106MM RR, 8/81 MORT
3D BN		LTCOL M. HUNTER		1048	27	C3	S	3	3	3	3	C2	711001	8/106MM RR, 8/81 MORT

* PARENTHETIC UNIT INDICATES OPCON WHEN DIFFERENT FROM ORGANIZATIONAL STRUCTURE.

TAB 21-3

Unclassified

UNCLASSIFIED

[redacted] UNCLASSIFIED

MARINE CORPS COMMAND CENTER

STATUS OF FMF UNITS**

18 AUGUST 1971

UNIT *	NOTE	UNIT COMMANDER	LOCATION	STRENGTH USMC	STRENGTH USN	UNIT READINESS☆ CURRENT RATE	RSN	P	S	R	T	EXPECTED RATE	EXPECTED BY	MAJOR EQUIPMENT
3D BN, 3D MARINES (CADRE)		MAJ F. G. HUTCHINSON JR.	CAMPEN	112	2	C4	N	5	4	4	5			7/106MM RR
5TH MARINES		LTCOL M. J. HOCHEHAUER	CAMPEN			C4	P	4	4	4	4	C4	711001	
HQCO		CAPT J. R. WILLIAMS		88	10	C4	P	4	4	3	4	C4	711001	
1ST BN		MAJ W. T. MACY		132	6	C4	P	4	4	4	4	C4	711001	1/106MM RR, 6/81 MORT
2D BN		MAJ J. A. LINNEMANN		198	4	C4	P	4	4	4	4	C4	711001	
3D BN		CAPT M. B. DARLING		139	7	C4	P	4	4	4	4	C4	711001	8/106MM RR
7TH MARINES		COL A. A. MONTI	CAMPEN			C3	P	3	1	2	3	C3	711001	
HQCO		1STLT P. E. MILLER		221	12	C2	S	1	2	2	1	C1	711001	
1ST BN (CADRE)		MAJ R. C. HALL		409	7	C4	N	5	3	3	5			8/106MM RR, 8/81 MORT
2D BN		LTCOL T. L. SULLIVAN		1134	44	C2	T	1	1	1	2	C1	711101	8/106MM RR, 7/81 MORT
3D BN	13	LTCOL R. J. MIILLE		1104	41	C2	T	1	1	1	2	C1	710901	8/106MM RR, 8/81 MORT
11TH MARINES (-) (REIN)		COL M. R. GRUBAUGH	CAMPEN			C4	P	4	3	4	4	C4	711001	
HQ BTRY		1STLT W. T. WILLIAMS		183		C4	P	4	4	4	4	C4	711001	6/M-30 MORT
1ST BN		MAJ H. H. BROOKS III		627	1	C4	P	4	2	4	4	C4	711001	18/105 HOW TD
2D BN (CADRE)		CAPT R. D. FULCHER		217	2	C4	P	4	4	4	4	C4	711001	
3D BN		MAJ W. A. HALL		657	18	C2	T	1	1	1	2	C1	711001	18/105 HOW TD
1ST MT BN (REIN)		CAPT E. R. WHITING		306	5	C3	R	1	2	3	2	C2	711001	
CO B, 9TH MT BN (-)		CAPT R. F. WILLIAMS		77	1	C3	X	4	1	1	4	C2	710901	
1ST RECON BN		MAJ H. C. COOPER JR.		267	5	C4	P	4	2	3	4	C4	711001	
1ST FORCE RECON CO		CAPT D. L. COOK		71	3	C4	P	4	2	3	4	C4	711001	
1ST TANK BN (REIN)	18	MAJ G. E. BERBAUM		417	21	C4	P	4	2	2	4	C4	711001	5/M-51 VTR, 7/M-67 TANK, 15/M103 TANK, 25/M48 TANK
CO D, 3D TANK BN (-) (CADRE)														
1ST ENGR BN	26	MAJ J. T. SCHULTZ		480	6	C4	P	4	4	4	4	C4	711001	
7TH ENGR BN (-) (REIN)	11	MAJ C. N. WALL		382	14	C4	P	4	2	3	4	C4	711001	
1ST BRIDGE CO (-)(CADRE)		1STLT D. N. TAYLOR JR.		52		C4	P	4	1	4	4	C4	711001	
1ST SP BN	8	LTCOL T. F. GRAY		247	17	C4	P	4	1	2	4	C4	711001	
3D AMTRAC BN (-)	19	MAJ J. P. SENIK		368	17	C4	P	4	2	2	4	C4	711001	5/LVTE-1, 8/LVTP-5 COMD, 70/LVTP-5, 3/LVTR
1ST SERV BN (REIN)	10	COL G. K. REID		732	33	C4	P	4	1	2	4	C4	711001	
1ST SEARCHLIGHT BTRY (CADRE)								5	5	5	5			
7TH SEP BULK FUEL CO (CADRE)								5	5	5	5			
1ST MED BN (-)		LCDR D.K. LIVINGSTON (USN)		44	82	C4	P	4	3	4	4	C4	711001	
1ST DENTAL CO		CAPT J. F. KING (USN)		3	42	C4	P	4	1	1	4	C4	711001	
FORCE TROOPS FMFPAC		BGEN P. G. GRAHAM	29 PALMS	1495	75	C4	X	4	2	3	3			
HQCO		MAJ E. L. ROTTSOLK		173	9	C1		1	1	1	1			
NOP, 1ST FSR		CAPT T. R. GERIES		49		C1		1	1	1	1			
9TH COMM BN (-)		LTCOL D. J. GARRET		376	12	C4	P	4	1	2	3	C3	710901	
13TH CIT (FORTRPS FMFPAC)	*	CAPT A. G. WILSON		16		C1		1	1	1	1			
21ST DENTAL CO (-)		CAPT G. W. WALTER (USN)		2	21	C4	S	1	4	4	1	C3	711001	
1ST FAG		LTCOL R. O. GILLICK	29 PALMS	19		C4	P	4	2	3	4	C3	710802	
HQ BTRY, 1ST FAG		1STLT G. R. MABRY		132	13	C2	T	1	1	2	2	C1	710802	
1ST 8" HOW BTRY SP (-)		CAPT J. P. FARRELL		136		C3	P	3	2	2	3	C3	710915	1/M-51 VTR, 4/8" HOW SP
1ST 175MM GUN BTRY SP		CAPT M. T. OWENS JR.		65		C4	P	4	1	3	4	C3	710802	1/M-51 VTR, 6/175 GUN SP
3D 175MM GUN BTRY SP		CAPT D. L. ROSENBERG		94		C4	P	4	3	4	4	C3	710802	1/M-51 VTR, 6/175 GUN SP
4TH BN, 11TH MAR (1ST FAG)	*	LTCOL D. W. SANFORD		304	2	C4	P	4	2	3	4	C3	710915	1/M-51 VTR, 18/155 HOW SP
CO A (REIN), 7TH ENGR BN(-)		CAPT P. A. PANKEY	29 PALMS	107		C4	P	4	1	2	3	C3	710802	
3D HOSPITAL CO (CADRE)		LT W. L. NICHOLS (USN)		22	18	C4	X	4	4	3	4			

* PARENTHETIC UNIT INDICATES OPCON WHEN DIFFERENT FROM ORGANIZATIONAL STRUCTURE.

TAB 21-4

Unclassified [redacted] UNCLASSIFIED

[redacted] UNCLASSIFIED

MARINE CORPS COMMAND CENTER

STATUS OF FMF UNITS **

18 AUGUST 1971

UNIT *	NOTE	UNIT COMMANDER	LOCATION	STRENGTH USMC	STRENGTH USN	UNIT READINESS ☆ CURRENT RATE	RSN	P	S	R	T	EXPECTED RATE	EXPECTED BY	MAJOR EQUIPMENT
MHTG-30		COL R. BIANCHI	SANTA ANA			C2	R	1	1	2	1	C1	710901	
H&MS-30		MAJ D. G. DUNLAP		290	1	C1		1	1	1	1			4/CH-46F, 2/CH-53A
HMHT-301		MAJ D. A. DALRYMPLE		171		C2	P	2	2	1	1	C1	710901	8/CH-53A
HMMT-302		LTCOL R. G. RITCHIE		186		C1		1	1	1	1			16/CH-46F
MCCRTG-10		COL R. B. SINCLAIR	YUMA			C2	P	1	2	2	1	C2	711130	
H&MS-10		MAJ J. R. CALLISON		424	6	C1		1	1	1	1			
VMFAT-101		LTCOL T. R. MOORE		375	4	C2	P	2	2	2	2	C1	711231	19/F-4B
VMAT-102		LTCOL R. D. REID		270	3	C3	P	3	2	2	1	C2	711031	25/A-4E
VMT-103		MAJ B. H. FREEMAN		212	3	C2	R	1	2	2	1	C1	710930	14/TA-4F, 4/TA-4J
1ST FSR		COL H. C. REED	CAMPER	1564	44	C3	P	3	2	2	3	C2	711001	
H&SBN		MAJ R. E. JOHNSON		408	23	C3	P	3	2	2	3	C2	711001	
SUPPLY BN		MAJ R. J. WEBB		633	21	C2	P	2	2	2	2	C1	711001	
MAINT BN		MAJ A. A. MCVITTY		523		C3	P	3	2	2	3	C2	711001	
EAST COAST														
FMFLANT		LTGEN E. E. ANDERSON	NORFOLK	38064	1032	C1		1	1	1	1			
HQ FMFLANT				806	4									
H&SBN		COL L. H. EVINE		726	4	C2	P	2	1	1	2	C1	711001	
HQ SUBN		LTCOL D. PRUDHOMME		80		C2	X	4	2	1	1	C1	710901	1/C-131F, 1/C-54T, 2/T-28B, 1/UH-34D, 1/US-2A, 2/US-2B
2D MAR DIV		BGEN R. D. BOHN	CAMLEJ	15562	644	C2	P	2	1	1	2	C3	710930	
HQBN		COL G. R. HERSHEY		1812	35	C2	R	1	1	2	1	C1	710831	
2D ITT	20	MSGT R. L. GONYO												
4TH ITT	20	WO G. L. ANDERSON												
6TH ITT	20	2DLT R. L. LAMBERT												
SCAMP	20													
2D MARINES		COL C. B. REDMAN	CAMLEJ			C2	P	2	1	1	2	C1	710831	
HQCO		CAPT G. W. SCHLITZ		262	5	C1		1	1	1	1			
1ST BN		LTCOL A. M. GRAY		1087	31	C3	T	1	1	1	3	C2	710830	8/106MM RR, 8/81 MORT
2D BN	13/15	LTCOL M. ROJO JR.		945	19	C3	P	3	1	1	1	C2	710930	8/106MM RR, 8/81 MORT
3D BN (-) (32D MAU)	5*	LTCOL T. J. WILLIS	MED	945	33	C1		1	1	1	1			8/106MM RR, 8/81 MORT
SU 1, H&SCO, 3D BN (2D MAR)	*	1STLT J. R. LOWEY	CAMLEJ	27		C4	N	5	5	5	5			
6TH MARINES		COL F. R. KRAINCE	CAMLEJ			C2	P	2	1	1	2	C1	710831	
HQCO		CAPT R. J. SNOWDEN		264	6	C1		1	1	1	1			
1ST BN	6	LTCOL T. F. QUALLS		921	33	C2	P	2	1	1	1	C1	710930	6/106MM RR, 6/81 MORT
2D BN		MAJ J. F. DELANEY		994	20	C2	P	2	1	1	2	C1	710831	8/106MM RR, 8/81 MORT
3D BN		MAJ S. B. WANNER		913	31	C3	P	3	1	1	1	C2	710930	8/106MM RR, 8/81 MORT
8TH MARINES		COL E. M. YOUNG	CAMLEJ			C2	P	2	1	1	1	C1	710930	
HQCO	23	1STLT H. L. SAWYER		231	14	C1		1	1	1	1			
1ST BN		LTCOL M. H. IVINS		854	21	C2	P	2	1	1	2	C1	711031	8/106MM RR, 8/81 MORT
2D BN (-)	9	LTCOL D. O. PAREDES	GTMO	707	22	C2	P	2	1	1	1	C1	710930	8/106MM RR, 8/81 MORT
CO E, 2D BN		CAPT C. D. KELLER	CAMLEJ	293	2	C4	N	5	5	5	5			
3D BN	23	MAJ J. T. BOMLIN		877	20	C3	P	3	1	1	1	C2	710930	8/106MM RR, 8/81 MORT
10TH MARINES		COL C. R. BURROUGHS	CAMLEJ			C4	P	4	1	1	2	C3	710930	
HQ BTRY		1STLT R. R. HARRIS		246	6	C1		1	1	1	1			
1ST BN	23	LTCOL J. A. LIVINGSTONE		420	10	C4	P	4	1	1	2	C3	710930	18/105 HOW TD
2D BN		MAJ J. W. ROSS		375	10	C4	P	4	1	1	2	C3	710930	18/105 HOW TD
3D BN		LTCOL R. F. MOODY		366	10	C4	P	4	1	1	2	C3	710930	18/105 HOW TD
4TH BN		LTCOL R. F. BELLI		281	7	C4	P	4	1	1	2	C3	710930	1/M-51 VTR, 18/185 HOW SP

* PARENTHETIC UNIT INDICATES OPCON WHEN DIFFERENT FROM ORGANIZATIONAL STRUCTURE.

TAB 21-6

Unclassified [redacted]

UNCLASSIFIED

[redacted] UNCLASSIFIED

MARINE CORPS COMMAND CENTER

STATUS OF FMF UNITS**

18 AUGUST 1971

UNIT	NOTE	UNIT COMMANDER	LOCATION	STRENGTH		UNIT READINESS☆								MAJOR EQUIPMENT
						CURRENT						EXPECTED		
				USMC	USN	RATE	RSN	P	S	R	T	RATE	BY	

☆ UNIT READINESS RATING CATEGORY

C-1 FULLY COMBAT READY
C-2 SUBSTANTIALLY COMBAT READY
C-3 MARGINALLY COMBAT READY
C-4 NOT COMBAT READY

☆ READINESS ABBREVIATIONS

P PERSONNEL READINESS
S SUPPLIES/EQUIPMENT ON HAND
R EQUIPMENT READINESS
T TRAINING READINESS
X COMMANDERS SUBJECTIVE JUDGEMENT
N RESOURCE ALLOCATION BY COGNIZANT SERVICE DOES NOT PERMIT A HIGHER C-RATING

NOTES

1. BLT 1/4 BREAKDOWN ON TAB 34.
2. 31ST MAU BREAKDOWN ON TAB 34.
3. ABOARD USS AMERICA (CVA-66).
4. ASSIGNED III MAF
5. LANFOR6THFLT 1-71 (32D MAU) BREAKDOWN ON TAB 36.
6. LANFORCARIB 1-71 BREAKDOWN ON TAB 36.
7. VMA(AW)-533 (w/10 A-6A AIRCRAFT) AT NAHA, OKINAWA, FOR TRAINING DURING THE PERIOD 16AUG-15OCT71.
8. H&SCO, CO B, 1ST SP BN IN CADRE STATUS.
9. GTMO BN (REIN) BREAKDOWN ON TAB 36-2.
10. TRUCK CO, 1ST SERV BN (CADRE).
11. CO C, 7TH ENGR BN (CADRE).
12. THIS UNIT IS BOTH ADCON/OPCON TO WERS-17 (-).
13. AIR ALERT BATTALION.
14. PERSONNEL AND EQUIPMENT CARRIED IN HQBN, 1ST MARDIV.
15. VIEQUES TRNG (DET, H&SCO, CO E, 2/2).
16. ABOARD USS SARATOGA (CVA-60).
17. INCLUDES STRENGTH CO D, 7TH ENGR BN AND 1ST PLAT, 1ST BRIDGE CO.
18. H&SCO, CO B, CO C, AND CO D, 1ST TANK BN (CADRE).
19. H&SCO, CO B, AND CO C, 3D AMTRAC BN (CADRE).
20. PERSONNEL AND EQUIPMENT CARRIED IN HQBN, 2D MARDIV.
21. ONE PLATOON IS DEPLOYED WITH LANFOR6THFLT 1-71 AND ALSO ONE PLATOON WTIH LANFORCARIB 1-71.
22. PERSONNEL AND EQUIPMENT CARRIED IN HQBN, 3D MARDIV.
23. CONDUCTING DESFEX 1-71 DURING THE PERIOD 16-31AUG71.
24. SANGLEY AUGMENTATION FORCE (DET, 4TH MARINES w/1 OFF AND 91 ENL) AT SANGLEY PT, R.P.I.
25. ONE PLATOON IS DEPLOYED WITH LANFOR6THFLT 1-71, ONE PLATOON WITH LANFORCARIB 1-71 AND ONE PLATOON WITH THE GTMO BN.
26. STRENGTH INCLUDES DET, H&SCO, DET, ENGR SPT CO, AND CO A, 1ST ENGR BN.
27. THIS UNIT IS BOTH ADCON/OPCON TO MAG-12, HOWEVER, IS PHYSICALLY LOCATED ON OKINAWA WITH THEIR STRENGTH CARRIED UNDER OKINAWA.
28. FOUR OFFICERS AND 15 ENLISTED ATTACHED TO VAL-4 FOR EVALUATION OF YOV-10D.
29. TWO OFF & 32 ENL DEPLOYED TO MOROCCO & 1 OFF & 10 ENL DEPLOYED TO GTMO ON A PERMANENT BASIS.
30. BLT 3/4 AT FUJI TRAINING (3D BN, 4TH MAR, AND BTRY I (REIN), 3D BN, 12TH MAR).

** SOURCE: MARES FORSTAT REPORT DATED 2 AUGUST 1971.

TAB 21-9

UNCLASSIFIED [redacted]

Unclassified

UNCLASSIFIED
C[redacted]

MARINE CORPS COMMAND ~~CENTER~~

DISTRIBUTION OF MAJOR GROUND EQUIPMENT AND AIRCRAFT*

GROUND EQUIPMENT

18 AUGUST 1971

EQUIPMENT		NOTE	TOTAL EQUIP	JAPAN	OKI	7TH FLT MAU s	MID PAC	CAM PEN	29 PALMS			CAM LEJ	GTMO	6TH FLT MAU s	CARIB	OTHER
81MM MORTAR	M29	8	199	8	25	16	16	64				54	8	8		
106MM RR	M40A1C	8	190	8	24	16	16	56				54	8	8		
107MM	M30		6					6								
105MM HOW TD	M101A	8	150	6	18	12	24	36				48		6		
155MM HOW TD	M114A1															
155MM HOW SP	M109		53		17				18			18				
155MM GUN SP	M53		18						12			6				
175MM GUN SP			24						12			12				
8" HOW SP	M110		12		2				4			6				
90MM GUN TANK	M48		133		43	10		25				43	7	5		
120MM GUN TANK	M-103		32					15				12	5			
FLAME TANK	M-67		24		8			7				7	2			
VTR	M-51		23		6			5	4			8				
LVTR	M-51		11		3		1	3				4				
LVTP-5 COMD			32		7	2	3	8				11		1		
LVTP-5			332		56	20	44	70				132		10		
LVTE-1			15		5			5				5				

AIRCRAFT

AIRCRAFT	NOTE	TOTAL A/C	JAPAN	OKI	7TH FLT MAU s	MID PAC	EL TORO	SANTA ANA	YUMA	CH PT	BEAU	NEW RIVER	6TH FLT MAU s	CARIB	OTHER
FIXED WING															
C-117D		19	4			1	7			5	2				
KC-130F		24		6			8			10					
C-131F	7	1													1
C-54P/Q/R/S/T	7	6	3				1			1					1
TA-4F		57	4			2	8		14	21	8				
TA-4J		9							4	5					
TC-4C		3								3					
T-28B	7	7				5									2
AV-8A		7									7				
A-6A	4	79	2	10			19			48					
EA-6A	1	30	6				2			18					4
RF-4B		28	9				10			9					
F-4B	3	110	14			7	37		19	20	8				5
F-4J	5	117	16			29				30	30				12
A-4E		95	43						25		27				
A-4F		30					30								
A-4M		17									17				
OV-10A	2	53		11		3	4	7				17			11
US-2A	7	1													1
US-2B	7	2				1									1
HELICOPTERS															
UH-1E	2	64		18	4	8		6				5	2		21
UH-1N		2										2			
AH-1G															
AH-1J		31		4								27			
CH-46A		5				5									
CH-46D	6	133	3	29	13	30		38							20
CH-46F	6	159						41				50	59		9
CH-53A		72						53				17	2		
CH-53D		96		17	4	15						23	37		
VH-34D		1				1									
UH-34D	7	3				2									1

NOTES:
1. DET, VMCJ-2 ABOARD USS SARATOGA (CVA-60) IN "OTHER" (4/EA-6A A/C ASSIGNED). AFLOAT MED.
2. AT CAMPEN IN "OTHER".
3. AT KEY WEST IN "OTHER".
4. AT NAHA, OKINAWA, FOR TRAINING (16AUG-15OCT71).
5. ABOARD USS AMERICA (CVA-66)(VMFA-333)(12/F-4J) IN "OTHER".
6. AT QUANTICO IN "OTHER".
7. AT FMFLANT, NORFOLK, VA. IN "OTHER".
8. AT FUJI TRAINING, BLT 3/4 AND BTRY I (REIN), 3D BN, 12TH MAR.

*SOURCE: MARES FORSTAT REPORT [redacted]

Unclassified
UNCLASSIFIED

TAB-23

C[redacted]

UNCLASSIFIED
C[redacted]

MARINE CORPS COMMAND CENTER

FLEET MARINE FORCE DISPOSITION

18 AUGUST 1971

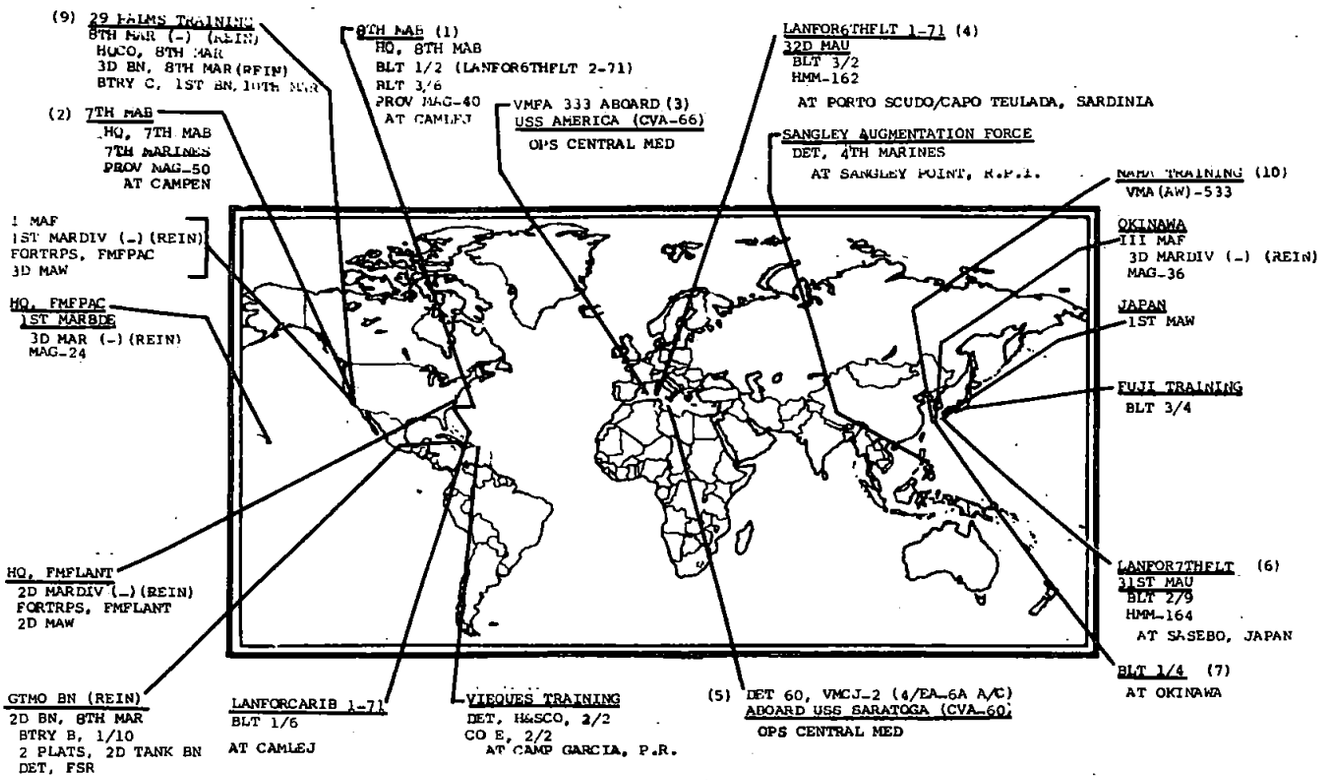

DISTRIBUTION BY BATTALION/SQUADRON

	INF BNS	VMFA	VMA	VMA(AW)	VMCJ	HMM	HMH	*HML	VMO	VMGR
WESTPAC	6	2	2	1	1	2	1	1	1	1
OKINAWA	(4)	(2)	(2)	(1)	(1)	(1)	(1)	(1)	(1)	(1)
JAPAN										
LANDING FORCE	(2)					(1)				
MIDPAC	2	3				1	1			
HAWAII	(2)	(3)				(1)	(1)			
EASTPAC	10	4	2	2	1	2	2	1	1	1
EL TORO/SANTA ANA		(4)	(2)	(2)	(1)	(2)	(2)			(1)
CAMPEN	(10)							(1)	(1)	
ATLANTIC	8	4	3	3	1	3	2	*2	1	1
CAMP LEJEUNE	(6)									
CHERRY POINT		(1)		(3)	(1)					(1)
BEAUFORT		(3)	(3)							
NEW RIVER						(2)	(2)	*(2)	(1)	
QUANTICO						(1)				
CARIB	(2)									
EUROPE	1					1				
MEDITERRANEAN	(1)					(1)				
GRAND TOTAL	27	13	7	6	3	9	6	4	3	3

*HMA-269, MAG-26 AT NEW RIVER, N. C.

UNCLASSIFIED
C[redacted]
Unclassified

TAB 31-1

[redacted]

UNCLASSIFIED

MARINE CORPS COMMAND CENTER

18 AUGUST 1971

FLEET MARINE FORCE MOVEMENTS

	UNIT	ETD/ATD	FROM	DESTINATION	ETA/ATA
	MOVEMENTS 12 - 18 AUGUST 1971				
(3)	VMFA-333	16AUG71	PALMA, MALLORCA, SPAIN	OPS CENTRAL MED	17AUG71
(5)	DET 60, VMCJ-2	16AUG71	ATHENS, GREECE	OPS CENTRAL MED	17AUG71
	3D RECON BN (-) (REIN)	11AUG71	FUJI, JAPAN	OKINAWA	15AUG71
	CO B, 3D TANK BN(-)	11AUG71	FUJI, JAPAN	OKINAWA	15AUG71
	BTRY F, 2D BN, 12TH MAR	11AUG71	FUJI, JAPAN	OKINAWA	15AUG71
	BLT 3/4	15AUG71	OKINAWA	FUJI, JAPAN	16AUG71
(6)	LANFOR7THFLT (31ST MAU)	12AUG71	SUBIC BAY, R.P.I.	SASEBO, JAPAN	17AUG71
(8)	VMA-331	14AUG71	BEAUFORT, SOUTH CAROLINA	PENSACOLA, FLORIDA	14AUG71
		18AUG71	PENSACOLA, FLORIDA	BEAUFORT, SOUTH CAROLINA	18AUG71
(9)	8TH MAR (-)(REIN)	16AUG71	CAMP LEJEUNE, NORTH CAROLINA	MCB 29 PALMS, CALIFORNIA	16AUG71
(10)	VMA(AW)-533	16AUG71	IWAKUNI, JAPAN	NAHA, OKINAWA	16AUG71
	PROJECTED MOVEMENTS 19 - 25 AUGUST 1971				
(4)	LANFOR6THFLT 1-71 (32D MAU)	19AUG71	PORTO SCUDO/CAPO TEULADA, SARDINIA	SOUDA BAY, CRETE	22AUG71
(7)	BLT 1/4	19AUG71	OKINAWA	ARGOPS SOUTH CHINA SEA	19AUG71
		22AUG71	ARGOPS SOUTH CHINA SEA	HONG KONG	23AUG71

NOTES:

(1) CG FMFLANT ACTIVATED THE 8TH MAB (HQ, 8TH MAB, BLT 1/2 (LANFORSIXTHFLT 2-71), BLT 3/6 AND PROV MAG-40) FOR PLANNING AND PARTICIPATION IN EXERCISE DEEP FURROW-71. EXERCISE DEEP FURROW-71 IS A JOINT AND COMBINED NATO EXERCISE TO BE CONDUCTED DURING THE PERIOD 9-20OCT71 TO INCLUDE AMPHIBIOUS LANDINGS IN TURKISH THRACE BY A COMBINED U.S. AND UNITED KINGDOM/ITALIAN LANDING FORCE. BGEN T. H. MILLER, JR., AWC 2D MAW, IS DESIGNATED AS CG 8TH MAB.

(2) CG, I MAF ACTIVATED THE 7TH MAB (HQ, 7TH MAB, 7TH MARINES AND PROV MAG-50) FOR PLANNING ON 1JUL71 FOR PARTICIPATION IN ROPEVAL 3-71, A MAB SIZE AMPHIBIOUS EXERCISE TO BE CONDUCTED IN THE CAMP PENDLETON/CLEVELAND NATIONAL FOREST AREAS DURING THE PERIOD 8-17SEP71. LANDING FORCE OPERATIONS WILL BE DESIGNED TO TRAIN FORCES IN THE PLANNING AND EXECUTION OF AMPHIBIOUS OPERATIONS INVOLVING THE TECHNIQUE OF STAND-OFF AMPHIBIOUS ASSAULT AND ASPECTS OF THE SEA-BASING CONCEPT. BGEN P. G. GRAHAM, CG, FORTRPS, FMFPAC, IS DESIGNATED AS CG 7TH MAB.

(3) CONDUCTING OPERATIONS IN THE CENTRAL MED (16-20AUG71). ANCHORAGE SOUDA BAY, CRETE (22AUG71). OPERATIONS SCHEDULED FOR THE CENTRAL MED FROM 23-26AUG71.

(4) PARTICIPATING IN PHIBLIX 2-72 DURING THE PERIOD 8-18AUG71, CONDUCTING THE HELIBORNE AND AMPHIBIOUS ASSAULT AT PORTO SCUDO, SARDINIA, FOLLOWED BY A LIVE FIRING EXERCISE AT CAPO TEULADA, SARDINIA, IMPACT AREA FOR TRAINING IN NAVAL GUNFIRE SUPPORT, CLOSE AIR SUPPORT, AND WITH ALL ORGANIC MAU WEAPONS. SCHEDULED FOR PORT VISIT AT SOUDA BAY, CRETE DURING THE PERIOD 22-27AUG71.

(5) CONDUCTING OPERATIONS IN THE CENTRAL MED (17-18AUG71). SCHEDULED TO PARTICIPATE IN EXERCISE NATIONAL WEEK X (19-27AUG71). EXERCISE NATIONAL WEEK X IS A UNILATERAL FLEET EXERCISE INVOLVING AIR, SURFACE, AND SUBSURFACE UNITS OF THE SIXTH FLEET DESIGNED TO EXERCISE AND EVALUATE SIXTH FLEET CAPABILITY TO LOCATE, TRACK, AND NEUTRALIZE UNITS OF A POTENTIALLY HOSTILE MEDITERRANEAN NAVAL FORCE.

(6) PORT VISIT SASEBO, JAPAN (18-24AUG71).

(7) EMBARKING ABOARD ARG BRAVO SHIPPING (17-19AUG71) AND SCHEDULED TO DEPART OKINAWA ON 19AUG71 FOR ARGOPS IN THE SOUTH CHINA SEA WHILE ENROUTE TO HONG KONG. SCHEDULED FOR PORT VISIT AT HONG KONG DURING THE PERIOD 23-27AUG71.

(8) VMA-331 (w/13 A4E AIRCRAFT) CONDUCTED TRAINING AT PENSACOLA, FLORIDA, FROM 16-18AUG71. EDR BEAUFORT IS 18AUG71.

(9) CONDUCTING DESFEX 1-71 DURING THE PERIOD 16-31AUG71.

(10) VMA(AW)-533 (w/10 A-6A AIRCRAFT) AT NAHA, OKINAWA, FOR TRAINING DURING THE PERIOD 16AUG-15OCT71.

UNCLASSIFIED

TAB 31-2

Unclassified [redacted]

[redacted] UNCLASSIFIED

MARINE CORPS COMMAND CENTER

FMF PACIFIC UNIT LOCATIONS AND STRENGTHS AND OSD CEILING CONSIDERATIONS (WESTPAC)

18 AUGUST 1971

RVN

USMC TRANSITIONAL SUPPORT FORCE

NAVFORV	5
HQ STAFF MACV	49
JUSPAO	4
SAE	2
I CORPS	3
NAV ADV GRU	80
SOG	17
AID DEPT STATE	3
DEF COM AGCY	11
SUB UNIT 1, 1ST ANGLICO	180
EMBASSY SECURITY	156
CORDS	5
NOG DET YOV-10	21
DCPG LNO	3
DET, H&HS-18	20
DOD SPEC REP	3
ROK LOG TEAM	13
CREDIT ACCOUNT	60
MEDTC	1
WESTPAC TRANS OFF	1
TOTAL - OSD PROGRAM XIII SPACE AUTHORIZATION	637

	USMC	USN
OSD PROGRAM XIII SPACE AUTHORIZATION	637	
SUB UNIT 1, 1ST ANGLICO	168	10
MACV STAFF/MACV FIELD	166	
NAVADVGRU/MACV UNITS	56	
OTHERS	184	
TOTAL RVN STRENGTH AS OF 12AUG71.	574	10

OKINAWA

III MAF (TF-79)

HQ, III MAF

3D MARDIV (-) (REIN) (TF-79.2)

HQ, 3D MARDIV (-)(REIN)
- 4TH MARINES
  - 1/4 (BLT)
  - 2/4
  - 3/4
- 9TH MARINES
  - 1/9
  - 2/9 (31ST MAU)
  - 3/9

1ST MAW

MAG-36

VMGR-152	(KC-130F)
VMO-6 (-)	(OV-10A/UH-1E)
HMH-462	(CH-53D)
HMM-164	(CH-46D/CH-53D/UH-1E)(31ST MAU)
HMM-165	(CH-46D)
HML-367	(UH-1E/AH-1G/J)

3D FSR

		USMC	USN
	OSD PROGRAM XIII SPACE AUTHORIZATION	19,249	934
	OKINAWA STRENGTH RECAPITULATION		
	III MAF		
	HQ, III MAF	131	
(3)	3D MARDIV (-)(REIN)	12,351	780
	1ST MAW ELEMENTS	3,059	31
	3D FSR	3,105	51
(1)	III MAF TOTAL	18,646	862
	OTHERS		
	MCB CAMP BUTLER/NON FMF	1,237	25
	NON-DEPLOYABLE CASUALS	0	
	SVN ORIGINATED PATIENTS	3	
	OTHER TOTAL	1,240	25
	GRAND TOTAL OKINAWA STRENGTH AS OF 5AUG71.	19,886	887

JAPAN

1ST MAW (TF-79.3)

HQ, 1ST MAW
- MAG-12

VMA-211	(A-4E)
VMA-311	(A-4E)
VMA(AW)-533	(A-6A)

- MAG-15

VMFA-115	(F-4B)
VMFA-232	(F-4J)
VMCJ-1	(EA-6A/RF-4B)

		USMC	USN
	OSD PROGRAM XIII SPACE AUTHORIZATION	7,000	
	JAPAN STRENGTH RECAPITULATION		
	HQ, 1ST MAW	851	54
	1ST MAW	5,000	70
(2)	NON-FMF	1,043	
	GRAND TOTAL JAPAN STRENGTH AS OF 5AUG71.	6,894	124

NOTES
(1) LESS ONE MAU.
(2) INCLUDES MCAS, IWAKUNI, MB YOKOSUKA, MB SASEBO, AND CO "E", MAR SPT BN.
(3) SANGLEY AUGMENTATION FORCE (DET, 4TH MARINES) CONSISTING OF 1 OFF AND 91 ENL INCLUDED IN 3D MARDIV (-) (REIN) STRENGTH.

SOURCES: RVN STRENGTH: COMUSMACV WEEKLY STRENGTH REPORT MSG 140855ZAUG71.

OKI/JAPAN STRENGTH: FMFPAC WESTPAC STRENGTH VERIFICATION MSG 100251ZAUG71.

UNCLASSIFIED

Unclassified

TAB 33

[redacted]

[redacted]

UNCLASSIFIED

MARINE CORPS COMMAND CENTER

LANDING FORCES, SEVENTH FLEET

31st MAU*

18 AUGUST 1971

UNITS EMBARKED	STRENGTH			
TASK GROUP 79.4	USMC		USN	
	OFF	ENL	OFF	ENL
31ST MAU HQ DET	9	13		
COL E. F. ROTH, JR.				
BLT 2/9				
(LTCOL F. J. JOHNSON, JR.)				
2D BN, 9TH MARINES	40	1020	2	38
E/2/12TH MARINES	4	89		2
PLT, CO C, 3D RECON BN	1	23		2
PLT, CO B, 1ST AMTRAC BN	1	44		1
PLT, CO C, 3D SP BN	1	38		2
PLT, CO A, 3D MT BN	1	21		
PLT, CO A, 3D TANK BN	1	26		1
PLT, CO A, 3D ENGR BN	1	37		1
PLT, CO B, 3D MED BN		5	1	16
DET, HQBN, 3D MARDIV	1	7		
LOGISTIC SUPPORT UNIT				
DET, 3D SERV BN	1	31		1
DET, 3D FSR	1	25		
DET, 3D DENTAL CO			1	1
HMM-164	53	239	1	2
(LTCOL A. J. KETTERING)				
DET, HMM-462	8	29		
DET, HML-367	7	17		
TOTALS	130	1651	5	67

SHIPPING

USS NEW ORLEANS (LPH-11)
USS VANCOUVER (LPD-2)
USS PEORIA (LST 1183)
USS THOMASTON (LSD-28)

AIRCRAFT

13/CH-46D
4/CH-53D
4/UH-1E

ARMS & EQUIPMENT

1 LVTP-5 CMD
10 LVTP-5
5 M48 TANKS
6 105 HOW TD
8 106MM RR
8 81MM MORTAR
36 TRUCK, UTILITY PLATFORM W/O 106 RR, M-274
40 TRUCK, UTILITY, M-151 & M-715
1 TRUCK, UTILITY MRC-83
2 TRUCK, UTILITY MRC-123
4 TRUCK, UTILITY MRC-109
1 TRUCK, UTILITY MRC-124
1 TRUCK, UTILITY MRC-135
1 TRUCK, AMBULANCE M-718
1 TRUCK, CARGO 5T M-54
2 TRUCK, TANK M-49
2 TRUCK, DUMP 5T M-51
5 TRUCK, CARGO 3/4T M-37
35 TRUCK, CARGO 2½T M-35
1 TRUCK, WRECKER 5T M-543
36 TRAILER, CARGO M-416
17 TRAILER, CARGO M-105
6 TRAILER, TANK WATER M-149
2 TRAILER, CARGO M-101
2 KW LIGHT UNIT
4 TRACTOR TD-15 & TD-25
3 CRANE M-60 & M-62
1 HYPOCHLORINATION UNIT
2 TRUCK, M-43
2 ROUGH TERRAIN FORK LIFT (6000 LBS)
1 STEAM CLEANER
1 WATER PURIFICATION UNIT
1 BATH UNIT
2 GENERATOR PU 708/G & PU 692/G
4 GENERATOR PU-667 & PU 669
51 M60 MG
18 M60 MG HELO MOUNTED
39 50 CAL. HELO MOUNTED
6 60MM MORTAR
24 3.5 ROCKET LAUNCHER
8 FLAME THROWERS
10 50 CAL. MG

BLT 1/4*

18 AUGUST 1971

UNITS EMBARKED	STRENGTH			
TASK GROUP 79.5	USMC		USN	
	OFF	ENL	OFF	ENL
BLT 1/4				
(LTCOL D. G. ROBISON)				
1ST BN, 4TH MARINES	44	934	2	44
BTRY "C", (REIN), 3D BN, 12TH MAR	8	119	1	2
PLT, CO D, 3D RECON BN	1	20		
PLT, CO A, 1ST AMTRAC BN	1	39		1
PLT, CO C, 3D TANK BN	1	27		1
PLT, CO C, 9TH MT BN	1	22		
PLT, CO C, 3D ENGR BN	1	39		1
PLT, CO C, 3D SP BN	1	45		2
PLT, CO D, 3D MED BN		5	1	17
DET, 3D DENTAL CO			1	1
DET, HQBN, 3D MARDIV	1	4		
LOGISTIC SUPPORT UNIT	1	38		
DET, 3D SERV BN				
DET, 3D FSR				
TOTALS	60	1292	5	69

SHIPPING

USS DUBUQUE (LPD-8)
USS DURHAM (LKA-114)
USS FREDERICK (LST-1184)

AIRCRAFT

ARMS & EQUIPMENT

1 LVTP-5 CMD
10 LVTP-5
5 M48 TANKS
6 105 HOW TD
8 106MM RR
8 81MM MORTAR
33 TRUCK, UTILITY PLATFORM W/O 106 RR, M-274
30 TRUCK, UTILITY , M-151
4 TRUCK, VAN MRC-109
2 TRUCK, UTILITY M-123
2 TRUCK, UTILITY M-124
1 TRUCK, AMBULANCE M-718
2 TRUCK, AMBULANCE M-43
16 TRUCK, CARGO 2½T M-35
4 TRUCK, CARGO 3/4T M-37
2 TRUCK, TANK M-49
2 TRUCK, DUMP 5T M-51
14 TRUCK, CARGO 5T M-54
1 TRUCK, WRECKER 5T M-543
4 TRAILER, CARGO M-101
6 TRAILER, CARGO 3/4T M-101A1
15 TRAILER, CARGO M-105
4 TRAILER, TANK WATER M-149
27 TRAILER, CARGO M-416
1 30 KW GENERATOR
1 GENERATOR SET PU-720G
1 GENERATOR SET TRAILER MOUNTED PU-692G
1 BATH UNIT
1 WATER PURIFICATION UNIT
2 CONEX BOX
1 STEAM CLEANER

UNCLASSIFIED

Unclassified

* SEE TAB 31 FOR PRESENT LOCATION

TAB 34

[redacted]

UNCLASSIFIED

MARINE CORPS COMMAND CENTER

CHRONOLOGY OF SIGNIFICANT EVENTS

(18 AUGUST 1971)

DATES	LOCATION	UNITS	REMARKS
15JUN71	FUTEMA, OKINAWA	MACS-8, MACG-18, 1ST MAW	MACS-8 DEACTIVATED 150530ZJUN71.
26JUN71	DANANG, RVN	FLC	FLC DEACTIVATED 260900ZJUN71.
27JUN71	DANANG, RVN	3D MAB	AT 270400ZJUN71 HQ 3D MAB WAS DEACTIVATED AND MAJGEN A. J. ARMSTRONG, CG 3D MAB, DEPARTED DANANG ENROUTE TO HQ FMFPAC, HAWAII. WITH THE DEACTIVATION OF HQ 3D MAB, ALL 13593 OSD SPACES SCHEDULED FOR REDEPLOYMENT/DEACTIVATION DURING INCREMENT VII (KEYSTONE ORIOLE (ALPHA)) HAVE EITHER REDEPLOYED FROM RVN OR HAVE BEEN DEACTIVATED, LEAVING A TRANSITIONAL SUPPORT FORCE OF 637 PROGRAM XIII OSD SPACES.
30JUN71	ATSUGI, JAPAN SANGLEY PT., R.P.I.	MB, ATSUGI MB, SANGLEY PT.	MB, ATSUGI, JAPAN, DEACTIVATED 30 JUNE 1971. MB, SANGLEY PT., R.P.I. DEACTIVATED 30 JUNE 1971
30JUN71	29 PALMS, CALIF.	CO A (REIN) & DET, HQCO, 11TH ENGR BN, FORTRPS FMFPAC	CO A (REIN) AND DET, HQCO, 11TH ENGR BN DEACTIVATED 301600ZJUN71.
30JUN71	BEAUFORT, S.C.	MACS-9, MACG-28, 2DMAW	MACS-9 DEACTIVATED 30JUN71.
1JUL71	IWAKUNI, JAPAN CHERRY PT,N.C. EL TORO, CALIF GLENVIEW, ILL.	1ST MAW 2D MAW 3D MAW 4TH MAW	DEACTIVATIONS MWHG-1 AND MWFS-1, 1ST MAW MWHG-2 AND MWFS-2, 2D MAW MWHG-3 AND MWFS-3, 3D MAW MWHG-4 (GLENVIEW, ILLINOIS) AND MWFS-4 (GREEN BAY, WISC), 4TH MAW (USMCR) REDESIGNATIONS FROM — TO 1ST MAW H&HS-1 — MWHS-1 MWCS-1 — MWCS-18 2D MAW H&HS-2 — MWHS-2 MWCS-2 — MWCS-28 3D MAW H&HS-3 — MWHS-3 MWCS-3 — MWCS-38 4TH MAW (USMCR) H&HS-4 (DETROIT, MICH.) — MWHS-4 MWCS-4 (CHICAGO, ILL.) — MWCS-48
9JUL71	CAMPEN, CALIF	3D 8" HOW BTRY, 1ST MARDIV	3D 8" HOW BTRY DEACTIVATED 091500ZJUL71.
15JUL71	EL TORO, CALIF. CAMPEN, CALIF.	MAG-56,3D MAW	DEACTIVATIONS MAG-56, 3D MAW H&MS-56, MAG-56, 3D MAW MABS-56, MAG-56, 3D MAW REDESIGNATIONS FROM — TO SU 1, H&MS-56, MAG-56 — SU 1, H&MS-16, MAG-16 MATCU-74, H&MS-56, MAG-56 — MATCU-74, H&MS-16, MAG-16 MATCU-75, H&MS-56, MAG-56 — MATCU-75, H&MS-16, MAG-16 HML-267, MAG-56 — HML-267, MAG-16 VMO-2, MAG-56 — VMO-2, MAG-16 HMM-161, MAG-56 — HMM-161, MAG-16 HMM-163, MAG-56 — HMM-163, MAG-16 HMH-361, MAG-56 — HMH-361, MAG-16 HMH-363, MAG-56 — HMH-363, MAG-16
19JUL71	RVN	3D MAB	AT 191630ZJUL71, WITH THE ARRIVAL OF THE FINAL 3D MAB ELEMENTS OF INCREMENT VII (KEYSTONE ORIOLE (ALPHA)) ABOARD THE USS ST. LOUIS (LKA-116) AT LONG BEACH, CALIFORNIA, REDEPLOYMENT OF ALL MAJOR USMC UNITS FROM RVN HAS BEEN COMPLETED.
13AUG71	CAMPEN	1ST MP BN, 1ST MARDIV	1ST MP BN DEACTIVATED 131500ZAUG71

Unclassified

TAB 41-5

UNCLASSIFIED

UNCLASSIFIED

Department of Defense

NUMBER OF CASUALTIES INCURRED BY U. S. MILITARY PERSONNEL
IN CONNECTION WITH THE CONFLICT IN VIET-NAM

Cumulative from January 1, 1961 through August 7, 1971

18 AUGUST 1971

	Army	Navy *	Marine Corps	Air Force	Total
A. CASUALTIES RESULTING FROM ACTIONS BY HOSTILE FORCES					
1. Killed	25,104	1,050	11,465	455	38,074
2. Wounded or Injured					
a. Died of wounds	3,488	140	1,449	44	5,121
b. Nonfatal wounds					
Hospital care required	95,863	4,080	51,356	807	152,106
Hospital care not required	103,789	5,834	37,161	2,295	149,079
3. Missing					
a. Died while missing	1,634	182	5	394	2,215
b. Returned to control	48	7	6	26	87
c. Current missing	261	113	81	557	1,012
4. Captured or Interned					
a. Died while captured or interned	15	-	3	1	19
b. Returned to control	56	3	5	6	70
c. Current captured or interned	62	144	23	236	465
5. Deaths					
a. From aircraft accidents/incidents					
Fixed Wing	88	155	139	694	1,076
Helicopter	2,215	62	429	59	2,765
b. From ground action	27,938	1,155	12,354	141	41,588
TOTAL DEATHS a/	30,241	1,372	12,915	894	45,429
B. CASUALTIES NOT THE RESULT OF ACTIONS BY HOSTILE FORCES					
6. Current Missing	126	-	12	-	138
7. Deaths					
a. From aircraft accidents/incidents					
Fixed Wing	250	172	45	279	746
Helicopter	1,694	52	242	18	2,006
b. From other causes	4,706	606	1,391	261	6,964
TOTAL DEATHS	6,650	830	1,678	558	9,716

a/ Sum of lines 1, 2a, 3a and 4a.

*Navy figures include a small number of Coast Guard casualties.

Department of Defense
OASD (Comptroller)
Directorate for Information Operations
August 11, 1971

TAB 45-2

UNCLASSIFIED

Unclassified

UNCLASSIFIED

MARINE CORPS COMMAND CENTER

19 AUGUST 1971

DISPOSITION AND STRENGTH OF MAJOR US AND FW FORCES IN RVN

DISPOSITION

MR RECAP

MR I*	XXIV CORPS
220 MILES LENGTH@	30-75 MILES WIDTH
14,600 SQ MI AREA	2,860,300 CIV POP
	101ST ABN DIV (AM)
USA 19 BNs	23D INF DIV(AMERICAL)
ARVN 36 BNs	2D ROKMC BDE
ROKMC 4 BNs	147TH VNMC BDE
VNMC 6 BNs	258TH VNMC BDE
ARVN CAV 4 BNs	1ST ARVN DIV
	2D ARVN DIV
TOTAL 69 BNs	
MR II*	SRAG (NHA TRANG)
315 MILES LENGTH@	45-130 MILES WIDTH
31,300 SQ MI AREA	2,898,200 CIV POP
USA 4 BNs	173D ABN BDE
ARVN 31 BNs	ROK CAP INF DIV
ROK 18 BNs	9TH ROK DIV
ARVN CAV 3	22D ARVN DIV
TOTAL 56 BNs	23D ARVN DIV
MR III*	TRAC (LONG BINH)
90 MILES LENGTH@	55-115 MILES WIDTH
10,100 SQ MI AREA	5,133,000 CIV POP
USA 5 BNs	2D BDE, 25TH INF DIV
ARVN 55 BNs	1ST AUSTRALIAN TF
AUSTRALIA 2 BNs	ROYAL THAI VOL REGT
THAILAND 4 BNs	1ST CAV DIV (AM)
ARVN CAV 5 BNs	5TH ARVN DIV
VNMC 3 BNs	18TH ARVN DIV
	25TH ARVN DIV
TOTAL 74 BNs	369TH VNMC BDE
	1ST ARVN ABN DIV
MR IV*	DRAC (CAN THO)
195 MILES LENGTH@	35-115 MILES WIDTH
14,600 SQ MI AREA	5,700,1000 CIV POP
ARVN 41 BNs	7TH ARVN DIV
ARVN CAV 5 BNs	9TH ARVN DIV
	21ST ARVN DIV
TOTAL 46 BNs	

@ Coastal Arc
# Includes 3 RGR Bns
* See RVN Recap note

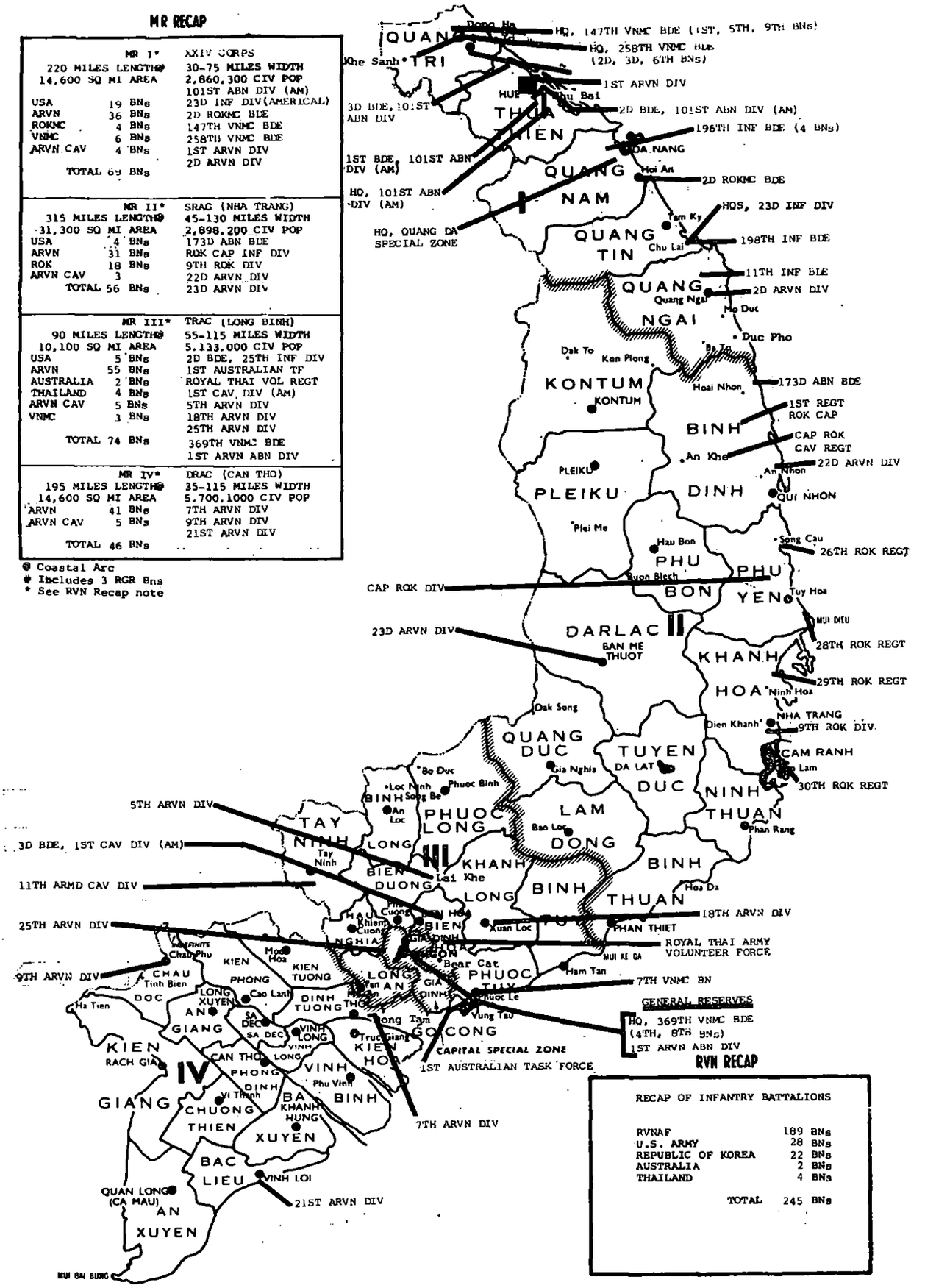

RVN RECAP

RECAP OF INFANTRY BATTALIONS	
RVNAF	189 BNs
U.S. ARMY	28 BNs
REPUBLIC OF KOREA	22 BNs
AUSTRALIA	2 BNs
THAILAND	4 BNs
TOTAL	245 BNs

TAB 46-1

[redacted]

Unclassified
UNCLASSIFIED

UNCLASSIFIED
[redacted]

MARINE CORPS COMMAND CENTER

STRENGTHS★

RVN ARMED FORCES (RVNAF) 18 AUGUST 1971

ARMY (ARVN)	412,705
NAVY (VNN)	41,184
AIR FORCE (VNAF)	50,245
MARINE CORPS (VNMC)	13,806
REGIONAL FORCES (RF)	295,019
POPULAR FORCES (PF)	247,638
TOTAL RVNAF	1,060,597

UNITED STATES FORCES

ARMY	175,927
NAVY	10,207
AIR FORCE	36,089
MARINE CORPS	574
COAST GUARD	98
TOTAL U.S.	222,895

FREE WORLD MILITARY ASSISTANCE FORCES (FWMAF)

REPUBLIC OF KOREA	48,506
AUSTRALIA	6,129
PHILIPPINES	83
THAILAND	8,161
NEW ZEALAND	275
REPUBLIC OF CHINA	31
SPAIN	7
TOTAL FWMAF	63,192

TOTAL FORCES IN RVN 1,346,684

★ SOURCE: RVNAF - MACV MONTHLY RPT OF GVN STRENGTH AS OF 31MAY71.
ALL OTHERS - MACV WEEKLY STRENGTH RPT AS OF 2400, 12AUG71.

UNCLASSIFIED
Unclassified

TAB 46-2

[redacted]

UNCLASSIFIED

MARINE CORPS COMMAND CENTER

REPUBLIC OF KOREA MARINE CORPS

18 AUGUST 1971

Commandant: General LEE, BYUNG MOON

Senior Marine Advisor: Colonel Howard T. PITTMAN, USMC

Strength: 32,360 (JUN71)

The Headquarters of the Republic of Korea Marine Corps (ROKMC) is located in Seoul. Marine Barracks are located in Seoul and the major Naval Bases at Inchon, Mokpo, Chejudo, Chinhae, Pusan, and Mukho. The ROKMC Supply and Maintenance Depot as well as the ROK Marine Schools Base are located at Chinhae. The Schools Base offers Recruit Training, NCO School, Supply School, LVT School, Officer Candidate Course, Drill Instructor School, Senior Amphibious Warfare School, English Language Training, and the ROKMC Command and Staff College. The ROK Marine Corps Amphibious Base at Pohang houses the 1st ROKMC Division (-), Special Training Unit to support ROK Marine personnel assigned to the 2d ROKMC Brigade (Blue Dragons) in Vietnam. The ROKMC is operationally organized as indicated below:

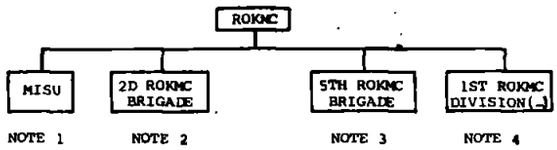

NOTE 1: Marine Island Security Unit (MISU) is a defense force approximating a reinforced Infantry Battalion in size and weaponry. It is located on the offshore islands of the Westerly extension of the DMZ mandated to the United Nations. Although it is administratively controlled by HQ, ROKMC, it is under the operational control of Commander, ROK Fleet. The organization of the MISU is indicated on Chart 1.

NOTE 2: The 2d ROK Marine Brigade is deployed to the Republic of Vietnam and organization is indicated on Chart 2.

NOTE 3: The 5th ROK Marine Brigade is currently deployed in a defensive role along the DMZ on the Kimpo Peninsula. It is administratively controlled by HQ, ROKMC but is under the operational control of I Corps (Group), Eighth U. S. Army. It is considered the Brigade would be fixed in position in the event of open hostilities in Korea and could not be readily redeployed without major adjustment in combat unit locations within the the United Nation Command during peacetime. The Brigade was initially formed from the assets of the list ROKMC Division and represents those units which the division is minus at this time. The current organization of the 5th Brigade is indicated on Chart 3.

NOTE 4: The 1st ROKMC Division (-) located at Pohang is administratively controlled by HQ, ROKMC and under the operational control of Commander, Naval Forces Korea. It is designated as the strategic Reserve for the Defense of the ROK. The organization for the Division (-) is indicated on Chart 4. It should be noted that the Amphibian Tractor Battalion is presently equipped with the LVT-3C.

MARINE ISLAND SECURITY UNIT (MISU)

COMMANDING OFFICER: BGEN HUR HONG

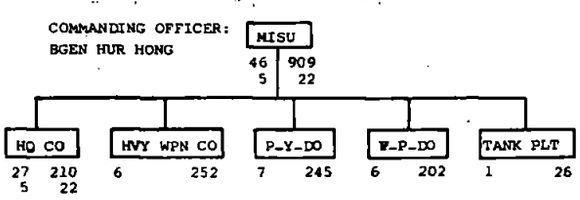

CHART #1

5TH ROK MARINE BRIGADE

COMMANDING GENERAL: BGEN KIM, Suk Ku

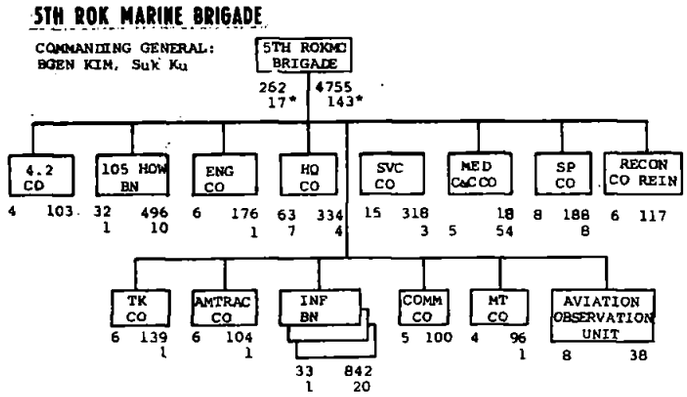

CHART #3

2D ROK MARINE BRIGADE

Strength: 7,118 (AUG71)

COMMANDING GENERAL: MGEN LEE, Dong Yong

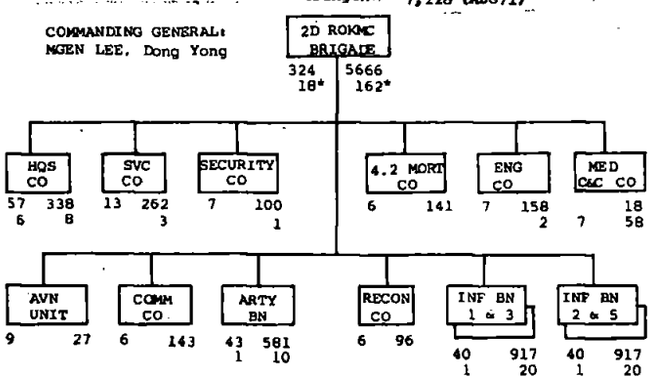

CHART #2

* Second line of figures under each block indicates ROK Navy personnel.
** Minus includes 1 Co Tanks assigned 5th Brigade and 1 Platoon Tanks attached MISU.

FIRST ROK MARINE DIVISION (-)

COMMANDING GENERAL: MGEN KIM, YUN SANG

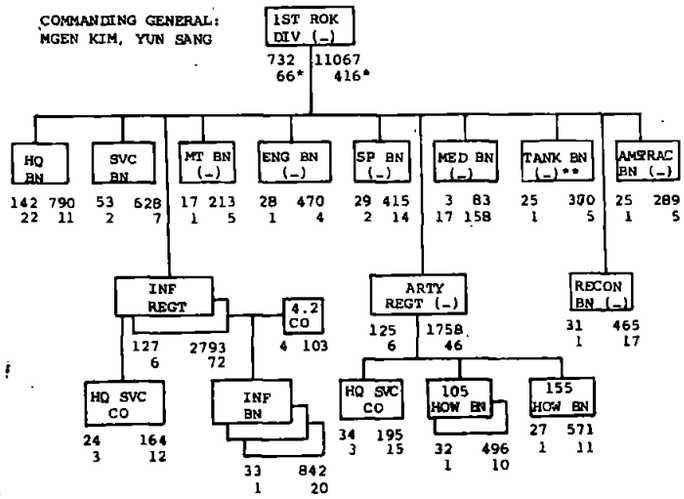

CHART #4

Unclassified

TAB 48-1

UNCLASSIFIED

UNCLASSIFIED

MARINE CORPS COMMAND CENTER

TABLE OF CONTENTS

25 AUGUST 1971

SECTION I - MARINE CORPS FORCES - WORLD WIDE	LIST OF EFFECTIVE TABS	DATE OF LATEST CHANGE
ALLOCATION OF MARINE CORPS PERSONNEL	11	28JUL71
SELECTED PERSONNEL AND AIRCRAFT DATA	12	25AUG71
UNITED STATES MARINE CORPS RESERVE	13-1	30DEC70
	13-2	23DEC70
	13-3	4AUG71
	13-4	23DEC70
MISCELLANEOUS NON-FMF UNITS	14-1	14JUL71
(MARINE BARRACKS)	14-2	30JUN71
(MARINE SECURITY GUARD BATTALION)	14-3	14APR71
(MARINE DETACHMENTS AFLOAT)	14-4	14APR71
	14-5	30JUN71
SECTION II - STATUS OF FLEET MARINE FORCES		
STATUS OF FMF UNITS	21-1	25AUG71
	21-2	25AUG71
	21-3	25AUG71
	21-4	25AUG71
	21-5	12AUG71
	21-6	25AUG71
	21-7	25AUG71
	21-8	25AUG71
	21-9	18AUG71
RECAPITULATION OF FMF ACTUAL STRENGTHS	22	11AUG71
DISTRIBUTION OF MAJOR GROUND EQUIPMENT AND AIRCRAFT	23	18AUG71
SECTION III - DISPOSITION OF FLEET MARINE FORCE UNITS		
FLEET MARINE FORCE DISPOSITION, DISTRIBUTION BY BATTALION/ SQUADRON AND MOVEMENTS	31-1	18AUG71 (25 Aug 71)
	31-2	18AUG71
FMF PACIFIC UNIT LOCATIONS AND STRENGTHS (MIDPAC/EASTPAC)	32	11AUG71
FMF PACIFIC UNIT LOCATIONS, STRENGTHS AND OSD CEILING CONSIDERATIONS (WESTPAC)	33	25AUG71
LANDING FORCES - 7TH FLEET	34	25AUG71
FMF ATLANTIC UNIT LOCATIONS AND STRENGTHS	35	11AUG71
LANDING FORCES - MEDITERRANEAN AND CARIBBEAN	36-1	11AUG71
GUANTANAMO BAY BATTALION	36-2	11AUG71
SECTION IV - GENERAL		
CHRONOLOGY OF SIGNIFICANT EVENTS	41-1	17MAR71
	41-2	21APR71
	41-3	23JUN71
	41-4	16JUN71
	41-5	18AUG71
STATISTICAL SUMMARY OF III MAF OFFENSIVE OPERATIONS IN VIETNAM	42-1	21APR71 (FINAL)
	42-2	18NOV70 (FINAL)
	42-3	18NOV70 (FINAL)
	42-4	10MAR71 (FINAL)
	42-5	12MAY71 (FINAL)
LANDING FORCES - 7TH FLEET; SUMMARY OF OPERATIONS IN RVN	43-1	18NOV70 (FINAL)
	43-2	18NOV70 (FINAL)
	43-3	18NOV70 (FINAL)
U.S. MARINE CORPS AIRCRAFT LOSSES IN SEASIA	44-1	18NOV70 (FINAL)
	44-2	18NOV70 (FINAL)
	44-3	18NOV70 (FINAL)
	44-4	18NOV70 (FINAL)
	44-5	18NOV70 (FINAL)
	44-6	18NOV70 (FINAL)
	44-7	18NOV70 (FINAL)
	44-8	18NOV70 (FINAL)
	44-9	25NOV70 (FINAL)
	44-10	5MAY71 (FINAL)
USMC/ENEMY CASUALTIES IN RVN; CUMULATIVE DOD CASUALTY FIGURES ON U.S. MILITARY PERSONNEL AND COMPARATIVE USMC/ENEMY KIA IN CONNECTION WITH THE CONFLICT IN RVN	45-1	28JUL71
	45-2	25AUG71
	45-3	26MAY71
	45-4	4AUG71
DISPOSITION AND STRENGTH OF MAJOR U.S. AND FW FORCES IN RVN	46-1	25AUG71
	46-2	25AUG71
COMUSMACV STAFF, PRINCIPAL MARINE OFFICERS HQ MACV	47	7JUL71
REPUBLIC OF KOREA MARINE CORPS	48-1	25AUG71
REPUBLIC OF VIETNAM MARINE CORPS	48-2	7JUL71
VIETNAM GEOGRAPHIC AND CLIMATE DATA	49-1	18NOV70
	49-2	19NOV70
CHRONOLOGY OF FMF DEPLOYMENT AND STRENGTH IN RVN	410-1	20JAN71
	410-2	25NOV70
	410-3	25NOV70
	410-4	25NOV70
	410-5	25NOV70
	410-6	25NOV70
	410-7	9DEC70
	410-8	10MAR71
	410-9	19MAY71
	410-10	23JUN71
	410-11	21JUL71
	410-12	21JUL71

Sheets previous "updation" discarded 8 Nov 73

CONTENTS OF THIS PUBLICATION
DOWNGRADED AT 3 YEAR INTERVALS
DECLASSIFIED AFTER 12 YEARS
DOD DIR 5200.10

Unclassified

UNCLASSIFIED

MARINE CORPS

AUG 26 1971

REFERENCE BRANCH

Unclassified

[redacted]

UNCLASSIFIED

MARINE CORPS COMMAND CENTER

SELECTED PERSONNEL AND AIRCRAFT DATA

PERSONNEL

25 AUGUST 1971

		STRENGTH	PERCENT USMC	PERCENT FMF	PERCENT FMFPAC
USMC TOTAL	*	211,301	100.00		
FLEET MARINE FORCES		98,835	46.77	100.00	
FMF ATLANTIC	#	38,064	18.01	38.51	
FMF PACIFIC	#	60,771	28.76	61.49	
VIETNAM	¢	553	00.26		

SOURCE: * HQMC 1080-20 (ESTIMATED PERSONNEL DATA) AS OF 31JUL71.
MARES FORSTAT REPORT DATED 2AUG71.
¢ MACV WEEKLY STRENGTH REPORT AS OF 19AUG71.

AIRCRAFT

11 AUGUST 1971

		FIXW	HELO	TOTAL	PERCENT USMC	PERCENT FMF	PERCENT FMFPAC
USMC TOTALS	**	771	607	1,378	100.00		
FLEET MARINE FORCES	@	695	566	1,261	91.51	100.00	
FMF ATLANTIC	@	324	275	599	43.47	47.50	
FMF PACIFIC	@	371	291	662	48.04	52.50	

SOURCE: ** DC/S AIR STATUS BOARD PHOTO AS OF 10AUG71.
@ MARES FORSTAT REPORT DATED 2AUG71.

TAB 12

Unclassified [redacted]

UNCLASSIFIED

UNCLASSIFIED
[redacted]

MARINE CORPS COMMAND CENTER

STATUS OF FMF UNITS **

25 AUGUST 197[illegible]

UNIT *	NOTE	UNIT COMMANDER	LOCATION	STRENGTH USMC	STRENGTH USN	UNIT READINESS ☆ CURRENT RATE	RSN	P	S	R	T	EXPECTED RATE	EXPECTED BY	MAJOR EQUIPMENT
FMF				98835	3051									
MIDPAC				5654	167									
FMFPAC		LTGEN W. K. JONES	HAWAII	60771	2015	C1		1	1	1	1			
HQ FMFPAC				1060	35									
H&SBN		COL R. G. LAUFFER	CP SMITH	997	27	C1		1	1	1	1			
DET 2, 21ST DENTAL CO (-)		CAPT M. R. HAMILTON(USN)			8	C1		1	1	1	1			
HQ SQDN		LTCOL C. E. DORFFELD	KANEOHE	63		C4	P	4	1	1	1	C4	710731	5/T-28B, 2/UH-34D, 1/US-2B, 1/VH-34D
1ST ANGLICO (-)		MAJ J. B. LEONARD	SDIEGO	153	3	C3	S	2	3	2	3	C2	710831	
SU 1, 1ST ANGLICO (MACV)	*	LTCOL D. GRAY	SAIGON	168	10	C1		1	1	1	1			
1ST RADIO BN		LTCOL J. K. HYATT JR.	KANEOHE	400		C1		1	1	1	1			
1ST MARINE BRIGADE		BGEN V. A. ARMSTRONG	KANEOHE	3873	119	C4	P	4	2	2	3	C3	711031	
H&S CO		CAPT H. J. TRAUTWEIN JR.		242	15	C1		1	1	1	1			
1ST ITT		1STLT R. R. SCOTT		11		C1		1	1	1	1			
11TH CIT (CADRE) (FMFPAC)	*	CAPT K. W. CLEM				C4	N	5	5	5	5			
DET 1, 21ST DENTAL CO (-)		CDR J. D. CRAWFORD (USN)			13	C1		1	1	1	1			
3D MARINES (-) (REIN)		LTCOL J. P. CONNOLLY II	KANEOHE			C4	P	4	1	1	4	C3	711031	
HQCO (-)		CAPT E. P. MUSSETT JR.		66		C4	P	4	1	1	4	C3	711031	
1ST BN		MAJ P. J. KIESELBACH		807	53	C3	P	3	1	1	3	C2	711031	6/105 HOW TD, 8/106MM RR, 8/81 MORT
2D BN		MAJ F. W. BEEKMAN		4		C4	N	5	3	2	5	C3	711031	8/106MM RR, 8/81 MORT
CO A, 3D ENGR BN (-)		CAPT T. M. COOK		93		C3	P	3	2	2	2	C2	711031	
CO A (REIN), 3D MT BN (-)		1STLT R. S. DOLGERT		19		C4	P	4	1	1	4	C3	711031	
CO A (REIN), 3D SP BN (-) (CADRE)		CAPT R. F. BAKER		26		C4	P	4	1	1	4	C3	711031	
CO A, 3D RECON BN (-) (REIN) (CADRE)		CAPT P. M. KATANA		10		C4	P	4	1	1	4	C3	711031	
CO A (REIN), 3D MED BN (-) (CADRE)					4	C4	P	4	1	1	4	C3	711031	
1ST BN (-), 12TH MAR		MAJ R. J. COOGAN	KANEOHE	101		C4	P	4	1	1	4	C3	711031	18/105 HOW TD
CO D, 3D AMTRAC BN (-)		CAPT K. R. BURNS		138		C4	P	4	1	2	4	C3	711001	3/LVTP-5 COMD, 44/LVTP-5, 1/LVTR
COMM SPT CO, 7TH COMM BN(-)		MAJ R. T. HIMMERICH		242		C3	R	3	2	3	2	C2	711230	
PROV SERV BN		LTCOL J. W. BROWN		220		C4	P	4	4	3	4	C3	711231	
MAG-24		COL R. E. CAREY	KANEOHE	1894	34	C3	X	4	2	3	4	C3	710915	
H&MS-24		LTCOL C. L. PHILLIPS		508		C4	S	2	4	4	2	C3	710901	1/C-117D, 5/CH-46A, 2/TA-4F
MABS-24		LTCOL W. R. LEDBETTER		338	34	C4	P	4	2	2	2	C3	710915	
MATCU-70		WO O. F. GOUR JR.		40		C4	P	4	2	1	4	C3	710801	
VMFA-122		LTCOL L. FURSTENBERG		170		C4	P	4	4	4	4	C3	711101	7/F-4B
VMFA-212		LTCOL R. D. REVIE		212		C3	X	4	1	3	3	C2	710704	13/F-4J
VMFA-235		MAJ G. H. LEACH		215		C3	X	4	1	1	4	C2	711231	16/F-4J
MACS-2		LTCOL P. L. ELLIOTT		168		C4	P	4	1	2	3	C3	711101	
HMH-262		MAJ C. M. LIVELY		130		C4	N	5	1	2	5			30/CH-46D
HMH-463		MAJ M. E. EDWARDS		113		C4	P	4	1	4	4	C3	711101	15/CH-53D
DET, VMO-6 (-)						C4	P	4	4	4	4	C3	711231	3/OV-10A
DET, HML-367 (-)						C4	P	4	1	1	4	C3	711231	8/UH-1E
WESTPAC				26580	986									
FMFPAC														
III MAF		LTGEN D. J. ROBERTSON	CP COURTNEY	26580	986									
H&SCO				131		C1		1	1	1	1			
3D MARDIV(-)(REIN) (III MAF)	*	MAJGEN L. METZGER	CP COURTNEY	14431	780	C2	T	1	1	1	2	C2	720601	
HQBN		COL H.A.F.VONDERHEYDE		1683	46	C2	T	1	1	2	2	C2	720601	
3D ITT	22	WO T. F. SINGLEY	CP HANSEN											
7TH ITT	22	CAPT E. N. SIBLEY												
11TH ITT	22	1STLT M. C. MONAHAN												
15TH ITT	22	WO J. W. STANLEY												
17TH ITT	22	CAPT G. H. JOHNSON JR.												
6CAMP	22													
3D CIT		CAPT R. E. SHROYER		14		C1		1	1	1	1			
1ST SSCT		CAPT T. L. STROHECKER	CP COURTNEY	11		C3	S	1	3	1	1	C1	710805	
3D DENTAL CO		CAPT W. J. KENNEDY (USN)		4	66	C1		1	1	1	1			

* PARENTHETIC UNIT INDICATES OPCON WHEN DIFFERENT FROM ORGANIZATIONAL STRUCTURE.

TAB 21-1

Unclassified [redacted]

UNCLASSIFIED

UNCLASSIFIED

MARINE CORPS COMMAND CENTER

STATUS OF FMF UNITS **

25 AUGUST 1971

UNIT *	NOTE	UNIT COMMANDER	LOCATION	STRENGTH USMC	STRENGTH USN	UNIT READINESS ☆ CURRENT RATE	RSN	P	S	R	T	EXPECTED RATE	BY	MAJOR EQUIPMENT
4TH MARINES	24	COL R. J. PERRICH	CP HANSEN			C2	T	2	1	1	2	C2	720601	
HQCO		CAPT S. M. HARTNETT		203	8	C2	T	1	1	1	2	C2	720601	
1STBN	1	LTCOL D. G. ROBISON		978	46	C2	P	2	1	1	2	C1	710825	8/106MM RR, 8/81 MORT
2DBN	13	LTCOL J. PHILLIPS		991	37	C2	R	2	1	2	2	C1	710910	8/106MM RR, 8/81 MORT
3DBN	30	LTCOL A. J. CASTELLANA	FUJI	988	42	C2	P	2	1	1	2	C1	710930	8/106MM RR, 8/81 MORT
9TH MARINES		COL R. T. LAWRENCE	CP SCHWAB			C2	T	1	1	1	2	C1	710805	
HQCO		CAPT M. H. CRAFTON JR.		238	5	C2	R	1	1	2	2	C1	710930	
1STBN		LTCOL F.W.M.WOODROW JR.		1028	34	C2		2	1	2	1	C1	710915	8/106MM RR, 8/81 MORT
2DBN (31ST MAU)	2*	LTCOL F. J. JOHNSON JR.	31ST MAU	1060	40	C1		1	1	1	1			8/106MM RR, 8/81 MORT
3DBN		LTCOL B. S. SNELL	CP SCHWAB	976	40	C2	P	2	1	2	2	C1	711115	7/106MM RR, 8/81 MORT
12TH MARINES (-)		COL J. P. O'CONNELL	CP HANSEN			C2	T	2	1	1	2	C1	710805	
HQ BTRY (-)		CAPT D. J. LABOISSIERE		221	7	C2	R	1	1	2	2	C1	710905	
2DBN		LTCOL E. D. LITZENBERGER		516	16	C2	T	2	1	1	2	C2	711205	18/105 HOW TD
3DBN	30	LTCOL W. J. HALLISEY		467	15	C2	T	2	1	1	2	C2	711205	18/105 HOW TD
4THBN (-) (REIN)		LTCOL K. G. PATTERSON		479	12	C2	P	2	1	2	2	C2	711201	1/M51 VTR, 17/155 HOW SP
3D PLAT, 1ST 8" HOW BTRY	4													2/8" HOW SP
3D SERV BN (-)		COL E. B. HART	CP HANSEN	769	27	C2	T	1	1	1	2	C1	710825	
3D TANK BN (-)		LTCOL C. R. STIFFLER		573	16	C2	T	2	1	1	2	C2	720601	53/M48 TANK, 5/M51 VTR 8/M67 TANK
9TH MT BN (-)		MAJ M. F. SCANLON		295	9	C2	T	1	1	1	2	C2	711114	
3D MED BN (-)		LTCOL F. E. CLARK JR.		137	199	C3	S	3	3	3	2	C2	711001	
1ST HOSPITAL CO (CAIRE)		LTJG J. W. VRABEL (USN)		23	23	C4	P	4	1	2	4	C4	711231	
3D MT BN (-)		MAJ B. L. PARKS	CP SCHWAB	133	6	C2	T	1	1	1	2	C2	720601	
3D RECON BN (-)		LTCOL T. R. STUART		362	24	C2	T	1	1	1	2	C1	711001	
3D ENGR BN (-) (REIN)	17	LTCOL C. R. GIBSON		684	8	C2	P	2	1	2	2	C1	711001	
CO D (REIN), 7TH ENGR BN(-)		CAPT H. L. CAMPBELL	CP HAGUE	141		C3	P	3	2	2	2	C2	711201	
BRIDGE PLAT, 1ST BRIDGE CO		1STLT R. M. RAPP		18										
7TH COMM BN (-)		LTCOL M. A. SCOTT JR.	CP SCHWAB	463	8	C2	T	2	1	2	2	C2	720601	
3D SP BN (-)		LTCOL R. L. ANDERTON	CP HAGUE	380	36	C2	T	1	1	2	2	C2	720701	
1ST AMTRAC BN (-)		LTCOL J. G. BUCKMAN	CP SCHWAB	596	10	C2	P	2	2	2	2	C1	710905	3/LVTE-1, 9/LVTP-5 CMD, 76/LVTP-5, 3/LVTR
1ST MAW (III MAF)	*	MAJGEN R. G. OWENS JR.	IWAKUNI	8913	155	C2	R	2	2	2	2	C2	711001	
JAPAN (1ST MAW ELEMENTS)				5854	124									
MWHS-1		COL W. C. KELLY	IWAKUNI	819	22	C2	S	1	2	2	2	C1	710801	
7TH CIT (1ST MAW)	*	WO J. A. CANONICO		20		C1		1	1	1	1			
11TH FORCE DENTAL CO (-)		CDR J. J. LYONS (USN)		2	32	C1		1	1	1	1			
3D SSCT		CAPT G. G. MEYERS		10		C2	X	1	1	1	1	C1	710801	
MACG-18 (-)		COL E. M. JONES	IWAKUNI			C2	R	2	1	2	2	C2	711021	
H&HS-18 (-)		MAJ L. P. OBENHAUS		190		C2	R	2	2	2	2	C1	710901	
MASS-2 (-)		LTCOL T. G. DAVIS		184		C2	R	1	2	2	2	C1	711110	
MMCS-18		MAJ R. S. KAYE		292		C2	P	2	2	2	2	C2	711021	
MAG-12		COL E. J. RUTTY	IWAKUNI			C2	R	2	2	2	1	C2	711001	
H&MS-12		LTCOL K. D. CURRY JR.		550		C2	R	1	1	2	2	C2	711020	
MABS-12		LTCOL J. L. DRIEFER		377	20	C2	R	2	1	2	2	C2	711031	
MATCU-62 (MAG-12)	*	CAPT A. E. PETERS		39		C4	P	4	1	1	2	C3	711001	
VMA-211		LTCOL D. G. GASCOIGNE		211	1	C2	R	2	2	2	1	C2	711030	19/A-4E
VMA-311		LTCOL K. L. BATT		186	1	C2	P	2	2	2	1	C2	711002	24/A-4E
VMA(AW)-533	7	LTCOL R. P. SPRIER	NAHA	249		C2	R	2	1	2	1	C2	711001	12/A-6A
OTHER														
SU 2, H&MS-36			FUJI	7	17									3/CH-46D

* PARENTHETIC UNIT INDICATES OPCON WHEN DIFFERENT FROM ORGANIZATIONAL STRUCTURE.

TAB 21- 2

Unclassified

UNCLASSIFIED

UNCLASSIFIED

MARINE CORPS COMMAND CENTER

STATUS OF FMF UNITS **

25 AUGUST 1971

UNIT *	NOTE	UNIT COMMANDER	LOCATION	STRENGTH USMC	STRENGTH USN	UNIT READINESS ☆ CURRENT RATE	RSN	P	S	R	T	EXPECTED RATE	BY	MAJOR EQUIPMENT
MAG-15		COL R. R. MILLER	IWAKUNI			C2	T	2	2	2	2	C1	710915	
H&MS-15		MAJ M. P. CADY		554		C2	R	1	1	2	1	C1	711001	4/TA-4F
MABS-15		MAJ R. L. BECKWITH		368	21	C2	R	2	1	2	2	C2	710731	
MATCU-60 (MAG-15)	*	1STLT C. R. HICKEY		56		C2	P	2	1	1	2	C1	710801	
VMFA-115		LTCOL R. R. POWELL	CUBI PT.	289	1	C2	T	2	2	2	2	C2	711001	14/F-4B
VMFA-232		LTCOL J. L. GREGORCYK	IWAKUNI	318	1	C2	T	2	1	2	2	C1	710815	16/F-4J
VMCJ-1 (1ST MAW)	*	LTCOL S. S. EISENHAUER		341	1	C3	X	2	1	2	4	C2	711006	6/EA-6A, 9/RF-4B
MWSG-17		COL W. G. MCCOOL	IWAKUNI			C3	R	1	2	3	2	C2	710801	
H&MS-17		LTCOL W. R. LIMBACH		568	7	C3	R	1	2	3	2	C2	710901	4/C-117D, 3/C-54Q/R/S
WERS-17 (-)		MAJ A. L. FRUCCI		224		C2	R	1	2	2	2	C1	710815	
OKINAWA (1ST MAW ELEMENTS)				3059	31									
MAG-36		COL R. J. ZITNIK	FUTEMA			C2	R	1	2	2	1	C2	710924	
H&MS-36 (-)		LTCOL D. A. SPURLOCK		576		C2	S	1	2	2	1	C1	710901	9/CH-46D, 6/UH-1E
SU 1, H&MS-36 (-)		MAJ F. W. CRONE		51		C2	R	1	1	2	1	C1	710911	4/AH-1J
MABS-36		LTCOL V. J. GUINEE JR.		521	24	C2	R	2	1	2	2	C1	710830	
MATCU-66 (MAG-36)	*	CAPT K. R. CLARK		56		C2	P	2	1	2	2	C2	710925	
MATCU-68 (MAG-36)	*	WO L. R. COXE		16		C4	P	4	2	2	4	C4	711015	
HMM-164 (31ST MAU)	2*	LTCOL A. J. KETTERING	31ST MAU	285	3	C2	R	1	2	2	1	C1	710815	13/CH-46D, 4/CH-53D, 4/UH-1E
HMM-165		LTCOL P. L. MOREAU	FUTEMA	254		C2	R	1	2	2	1	C1	710810	20/CH-46D
HMH-462 (-)	2	LTCOL D. G. MCDONALD		262	1	C2	R	1	1	2	1	C1	710901	17/CH-53D
VMO-6 (-)		LTCOL J. L. NORTON		206		C2	R	1	2	2	1	C1	710901	11/OV-10A
VMGR-152 (1ST MAW)	*	LTCOL R. W. DUPHINEY		293	1	C4	R	2	4	4	3	C3	710831	6/KC-130F
HML-367 (-)		MAJ R. SANCHO		167		C1		1	1	1	1			12/UH-1E
OTHERS														
DET, MASS-2 (-)			FUTEMA											
SU 1, WERS-17 (-)	12	WO E. Q. HICKS		51		C1		1	1	1	1			
SU 1, H&MS-12 (-)	27	CAPT J. A. MILLER	NAHA	49		C2	S	1	2	2	1	C1	710730	
MACS-4		LTCOL R. D. MILLER	FUTEMA	272	2	C3	T	2	1	2	3	C2	710923	
3D FSR		COL R. E. ROEDER JR.	CP FOSTER	3105	51	C3	S	2	3	3	2	C2	710915	
H&S BN		LTCOL J. B. HARRIS SR.		890	25	C3	R	2	3	3	2	C2	710915	
SUPPLY BN		LTCOL J. W. FRIBERG		1212	26	C3	S	2	3	2	2	C2	710915	
NOP, 3D FSR (3D FSR)	*	CAPT C. W. SHIVER		45		C1		1	1	1	1			
MAINT BN		LTCOL H. I. FREY		958		C3	S	2	3	3	2	C2	710915	2/LVTE-1, 1/106MM RR, 1/81 MORT
EASTPAC				28537	866									
FMFPAC														
I MAF		MAJGEN R. T. DWYER JR.	CAMPEN	21		C3	X	2	4	4	2	C2	710901	
1ST MAR DIV (-) (REIN)		MAJGEN R. T. DWYER JR.	CAMPEN	14348	524	C4	P	4	2	3	4	C4	711001	
HQBN		COL R. N. BURHANS		1780	60	C4	P	4	2	2	4	C4	711001	3/81 MORT
1ST CIT		CAPT B. B. VORONIN		20		C1		1	1	1	1			
5TH ITT	14	CAPT R. A. KAROLY				C3	P	3	1	1	3	C3	710901	
9TH ITT	14	CAPT L. J. JANSEN				C1		1	1	1	1			
19TH ITT	14	1STLT G. D. JENNINGS				C4	P	4	1	1	4	C4	711101	
21ST ITT	14	2DLT M. M. LINCOLN				C4	P	4	1	1	4	C3	711001	
23D ITT	14	CAPT R. D. TOMLIN				C1		1	1	1	1			
25TH ITT	14	CAPT H. K. LEE				C4	P	4	1	1	4	C4	711001	
2D SSCT		WO E. L. HANEY		8		C4	R	1	1	4	1	C3	710901	
SCAMP		CAPT A. L. SELLECK JR.		24										
COMM SPT CO, 9TH COMM BN (-)		MAJ R. R. ANDERSON		299		C2	R	1	1	2	1	C2	711001	
1ST CIVIL AFFAIRS GRP (CADRE)		CAPT R. B. GRISCHKOWSKY		23		C4	P	4	1	1	4	C4	711001	
1ST MARINES		LTCOL J. D. ROWLEY				C4	S	3	4	4	3	C3	711001	
HQCO		CAPT V. L. SCHULTZ		186	10	C3	S	2	3	3	2	C2	711101	
1ST BN		LTCOL C. A. BARSTOW		1258	10	C4	R	3	3	4	3	C3	711001	8/106MM RR, 8/81 MORT
2D BN		LTCOL A. LUKEMAN		1055	17	C4	S	2	4	3	2	C3	711001	8/106MM RR, 8/81 MORT
3D BN		LTCOL M. HUNTER		1048	27	C3	S	3	3	3	3	C2	711001	8/106MM RR, 8/81 MORT

* PARENTHETIC UNIT INDICATES OPCON WHEN DIFFERENT FROM ORGANIZATIONAL STRUCTURE.

TAB 21-3

Unclassified

UNCLASSIFIED

UNCLASSIFIED

SECRET

MARINE CORPS COMMAND CENTER

STATUS OF FMF UNITS**

25 AUGUST 1971

UNIT *	NOTE	UNIT COMMANDER	LOCATION	STRENGTH USMC	STRENGTH USN	UNIT READINESS☆ CURRENT RATE	RSN	P	S	R	T	EXPECTED RATE	EXPECTED BY	MAJOR EQUIPMENT
3D BN, 3D MARINES (CADRE)		MAJ F. G. HUTCHINSON JR.	CAMPEN	112	2	C4	N	5	4	4	5			7/106MM RR
5TH MARINES		LTCOL M. J. HOCHENAUER	CAMPEN			C4	P	4	4	4	4	C4	711001	
HQCO		CAPT J. R. WILLIAMS		88	10	C4	P	4	4	3	4	C4	711001	
1ST BN		MAJ M. T. MACY		132	6	C4	P	4	4	4	4	C4	711001	1/106MM RR, 6/81 MORT
2D BN		MAJ J. A. LINNEMANN		198	4	C4	P	4	4	4	4	C4	711001	
3D BN		CAPT M. B. DARLING		139	7	C4	P	4	4	4	4	C4	711001	8/106MM RR
7TH MARINES		COL A. A. MONTI	CAMPEN			C3	P	3	1	2	3	C3	711001	
HQCO		1STLT P. E. MILLER		221	12	C2	S	1	2	2	1	C1	711001	
1ST BN (CADRE)		MAJ R. C. HALL		409	7	C4	N	5	3	3	5			8/106MM RR, 8/81 MORT
2D BN		LTCOL T. L. SULLIVAN		1134	44	C2	T	1	1	1	2	C1	711101	8/106MM RR, 7/81 MORT
3D BN	13	LTCOL R. J. MILLE		1104	41	C2	T	1	1	1	2	C1	710901	8/106MM RR, 8/81 MORT
11TH MARINES (-) (REIN)		COL W. R. GRUBAUGH	CAMPEN			C4	P	4	3	4	4	C4	711001	
HQ BTRY		1STLT W. T. WILLIAMS		163		C4	P	4	4	4	4	C4	711001	6/M-30 MORT
1ST BN		LTCOL R. J. HENLEY		627	1	C4	P	4	2	4	4	C4	711001	18/105 HOW TD
2D BN (CADRE)		CAPT R. D. FULCHER		217	2	C4	P	4	4	4	4	C4	711001	
3D BN		MAJ W. A. HALL		657	18	C2	T	1	1	1	2	C1	711001	18/105 HOW TD
1ST MT BN (REIN)		CAPT E. R. WHITING		306	5	C3	R	1	2	3	2	C2	711001	
CO B, 9TH MT BN (-)		CAPT R. F. WILLIAMS		77	1	C3	X	4	1	1	4	C2	710901	
1ST RECON BN		CAPT R. E. MILLER		267	5	C4	P	4	2	3	4	C4	711001	
1ST FORCE RECON CO		CAPT D. L. COOK		71	3	C4	P	4	2	3	4	C4	711001	
1ST TANK BN (REIN)	18	MAJ G. E. BERBAUM		417	21	C4	P	4	2	2	4	C4	711001	5/M-51 VTR, 7/M-67 TANK, 15/M103 TANK, 25/M48 TANK
CO D, 3D TANK BN (-) (CADRE)														
1ST ENGR BN	26	MAJ J. T. SCHULTZ		480	6	C4	P	4	4	4	4	C4	711001	
7TH ENGR BN (-) (REIN)	11	MAJ C. N. WALL		382	14	C4	P	4	2	3	4	C4	711001	
1ST BRIDGE CO (-) (CADRE)		1STLT D. N. TAYLOR JR.		52		C4	P	4	1	4	4	C4	711001	
1ST SP BN	8	LTCOL T. F. GRAY		247	17	C4	P	4	1	2	4	C4	711001	
3D AMTRAC BN (-)	19	MAJ J. P. SENIK		168	17	C4	P	4	2	2	4	C4	711001	5/LVTE-1, 8/LVTP-5 COMD, 70/LVTP-5, 3/LVTR
1ST SERV BN (REIN)	10	COL G. K. REID		732	33	C4	P	4	1	2	4	C4	711001	
1ST SEARCHLIGHT BTRY (CADRE)								5	5	5	5			
7TH SEP BULK FUEL CO (CADRE)								5	5	5	5			
1ST MED BN		LCDR D.K. LIVINGSTON (USN)		44	82	C4	P	4	3	4	4	C4	711001	
1ST DENTAL CO		CAPT J. F. KING (USN)		3	42	C4	P	4	1	1	4	C4	711001	
FORCE TROOPS FMFPAC		BGEN P. G. GRAHAM	29 PALMS	1495	75	C4	X	4	2	3	3			
HQCO		MAJ E. L. ROTTSOLK		173	9	C1		1	1	1	1			
NOP, 1ST FSR		CAPT T. R. GERIES		49		C1		1	1	1	1			
9TH COMM BN (-)		LTCOL D. J. GARRET		376	12	C4	P	4	1	2	3	C3	710901	
13TH CIT (FORTRPS FMFPAC)	*	CAPT A. G. WILSON		16		C1		1	1	1	1			
21ST DENTAL CO (-)		CAPT G. W. WALTER (USN)		2	21	C4	S	1	4	4	1	C3	711001	
1ST FAG		LTCOL R. O. GILLICK	29 PALMS	19		C4	P	4	2	3	4	C3	710802	
HQ BTRY, 1ST FAG		1STLT G. R. MABRY		132	13	C2	T	1	1	2	2	C1	710802	
1ST 8" HOW BTRY SP (-)		CAPT J. P. FARRELL		136		C3	P	3	2	2	3	C3	710915	1/M-51 VTR, 4/8" HOW SP
1ST 175MM GUN BTRY SP		CAPT M. T. OWENS JR.		65		C4	P	4	1	3	4	C3	710802	1/M-51 VTR, 6/175 GUN SP
3D 175MM GUN BTRY SP		CAPT D. L. ROSENBERG		94		C4	P	4	3	4	4	C3	710802	1/M-51 VTR, 6/175 GUN SP
4TH BN, 11TH MAR (1ST FAG)	*	LTCOL D. W. SANFORD		304	2	C4	P	4	2	3	4	C3	710915	1/M-51 VTR, 18/155 HOW SP
CO A (REIN), 7TH ENGR BN(-)		CAPT P. A. PANKEY	29 PALMS	107		C4	P	4	1	2	3	C3	710802	
3D HOSPITAL CO (CADRE)		LT W. L. NICHOLS (USN)		22	18	C4	X	4	4	3	4			

* PARENTHETIC UNIT INDICATES OPCON WHEN DIFFERENT FROM ORGANIZATIONAL STRUCTURE.

TAB 21-4

Unclassified

UNCLASSIFIED

UNCLASSIFIED

[redacted]

MARINE CORPS COMMAND CENTER

STATUS OF FMF UNITS **

25 AUGUST 1971

UNIT *	NOTE	UNIT COMMANDER	LOCATION	STRENGTH USMC	STRENGTH USN	UNIT READINESS ☆ CURRENT RATE	RSN	P	S	R	T	EXPECTED RATE	BY	MAJOR EQUIPMENT
MHTG-30		COL R. BIANCHI	SANTA ANA			C2	R	1	1	2	1	C1	710901	
H&MS-30		MAJ D. G. DUNLAP		290	1	C1		1	1	1	1			4/CH-46F, 2/CH-53A
HMMT-301		MAJ D. A. DALRYMPLE		171		C2	P	2	2	1	1	C1	710901	8/CH-53A
HMMT-302		LTCOL R. G. RITCHIE		186		C1		1	1	1	1			16/CH-46F
MCCRTG-10		COL R. B. SINCLAIR	YUMA			C2	P	1	2	2	1	C2	711130	
H&MS-10		MAJ J. R. CALLISON		424	6	C1		1	1	1	1			
VMFAT-101		LTCOL T. R. MOORE		375	4	C2	P	2	2	2	2	C1	711231	19/F-4B
VMAT-102		LTCOL R. D. REID		270	3	C3	P	3	2	2	1	C2	711031	25/A-4E
VMT-103		MAJ B. H. FREEMAN		212	3	C2	R	1	2	2	1	C1	710930	14/TA-4F, 4/TA-4J
1ST FSR		COL H. C. REED	CAMPEN	1564	44	C3	P	3	2	2	3	C2	711001	
H&SBN		MAJ R. E. JOHNSON		408	23	C3	P	3	2	2	3	C2	711001	
SUPPLY BN		MAJ R. J. WEBB		633	21	C2	P	2	2	2	2	C1	711001	
MAINT BN		MAJ A. A. MCVITTY		523		C3	P	3	2	2	3	C2	711001	
EAST COAST														
FMFLANT		LTGEN E. E. ANDERSON	NORFOLK	38064	1032	C1		1	1	1	1			
HQ FMFLANT				806	4									
H&SBN		COL L. H. EVINE		726	4	C2	P	2	1	1	2	C1	711001	
HQ SQDN		LTCOL D. PRUDHOMME		80		C2	X	4	X	1	1	C1	710901	1/C-131F, 1/C-54T, 2/T-28B, 1/UH-34D, 1/US-2A, 2/US-2B
2D MAR DIV		BGEN R. D. BOHN	CAMLEJ	15562	644	C2	P	2	1	1	2	C3	710930	
HQBN		COL G. R. HERSHEY		1812	35	C2	R	1	1	2	1	C1	710831	
2D ITT	20	MSGT R. L. GONYO												
4TH ITT	20	WO G. L. ANDERSON												
6TH ITT	20	2DLT R. L. LAMBERT												
SCAMP	20													
2D MARINES		COL C. B. REDMAN	CAMLEJ			C2	P	2	1	1	2	C1	710831	
HQCO		CAPT G. W. SCHLITZ		262	5	C1		1	1	1	1			
1ST BN	13	LTCOL A. M. GRAY		1087	31	C3	T	1	1	1	3	C2	710830	8/106MM RR, 8/81 MORT
2D BN	15	LTCOL M. ROJO JR.		945	19	C3	P	3	1	1	3	C2	710930	8/106MM RR, 8/81 MORT
3D BN (-) (32D MAU)	5*	LTCOL T. J. WILLIS	MED	945	33	C1		1	1	1	1			8/106MM RR, 8/81 MORT
SU 1, H&SCO, 3D BN (2D MAR)	*	1STLT J. R. LOMEY	CAMLEJ	22		C4	N	5	5	5	5			
6TH MARINES		COL F. R. KRAINCE	CAMLEJ			C2	P	2	1	1	2	C1	710831	
HQCO		CAPT R. J. SNOWDEN		264	6	C1		1	1	1	1			
1ST BN	6	LTCOL T. F. QUALLS		921	33	C2	P	2	1	1	1	C1	710930	6/106MM RR, 6/81 MORT
2D BN		LTCOL J. T. ENOCH		994	20	C2	P	2	1	1	2	C1	710831	8/106MM RR, 8/81 MORT
3D BN		MAJ S. B. WANNER		913	31	C3	P	3	1	1	1	C2	710930	8/106MM RR, 8/81 MORT
8TH MARINES		COL E. M. YOUNG	CAMLEJ			C2	P	2	1	1	1	C1	710930	
HQCO	23	1STLT H. L. SAWYER		231	14	C1		1	1	1	1			
1ST BN		LTCOL J. K. COODY		854	21	C2	P	2	1	1	2	C1	711031	8/106MM RR, 8/81 MORT
2D BN (-)	9	LTCOL D. O. PAREDES	GTMO	707	22	C2	P	2	1	1	1	C1	710930	8/106MM RR, 8/81 MORT
CO E, 2D BN		1STLT H. R. WEHUNT	CAMLEJ	293	2	C4	N	5	5	5	5			
3D BN	23	MAJ J. T. BOHLIN		877	20	C3	P	3	1	1	1	C2	710930	8/106MM RR, 8/81 MORT
10TH MARINES		COL C. R. BURROUGHS	CAMLEJ			C4	P	4	1	1	2	C3	710930	
HQ BTRY		1STLT R. R. HARRIS		246	6	C1		1	1	1	1			
1ST BN	23	LTCOL J. A. LIVINGSTONE		420	10	C4	P	4	1	1	2	C3	710930	18/105 HOW TD
2D BN		MAJ J. W. ROSS		375	10	C4	P	4	1	1	2	C3	710930	18/105 HOW TD
3D BN		LTCOL R. F. MOODY		366	10	C4	P	4	1	1	2	C3	710930	18/105 HOW TD
4TH BN		LTCOL R. F. BELLI		281	7	C4	P	4	1	1	2	C3	710930	1/M-51 VTR, 18/155 HOW SP

* PARENTHETIC UNIT INDICATES OPCON WHEN DIFFERENT FROM ORGANIZATIONAL STRUCTURE.

TAB 21-6

Unclassified

[redacted]

UNCLASSIFIED

[redacted] UNCLASSIFIED

MARINE CORPS COMMAND CENTER

STATUS OF FMF UNITS **

25 AUGUST 1971

UNIT *	NOTE	UNIT COMMANDER	LOCATION	STRENGTH USMC	STRENGTH USN	UNIT READINESS ☆ CURRENT RATE	RSN	P	S	R	T	EXPECTED RATE	EXPECTED BY	MAJOR EQUIPMENT
2D SERV BN		COL S. DAVIS	CAMLEJ	912	33	C2	P	2	1	1	2	C1	710930	
2D MT BN		LTCOL W. S. GERICHTEN		241	6	C2	P	2	1	1	1	C1	710930	
2D ENGR BN		MAJ W. W. WIDENER		590	10	C3	P	3	1	1	3	C2	710930	
2D RECON BN		MAJ G. E. STRICKLAND		417	13	C2	T	1	1	1	2	C1	710831	
2D SP BN		MAJ R. J. KENWORTHY		433	8	C2	P	2	1	2	2	C1	710930	
2D MED BN		CDR P. S. O'HALLORAN (USN)		154	179	C4	P	4	2	2	2	C3	710831	
2D DENTAL CO		CAPT A.P.GIAMMISSO(USN)			60	C2	P	2	1	1	1	C1	710930	
FORTPS, FMFLANT		BGEN J. C. FEGAN	CAMLEJ	5194	146	C3	P	3	1	1	2	C3	711101	
HQCO		MAJ R. M. OTTERAAEN		474		C1		1	1	1	1			
2D CIT		1STLT R. H. OSBON JR.		16		C1		1	1	1	1			
5TH CIT		CAPT W. A. BROWN		11		C4	P	4	1	1	1	C4	711201	
2D FAG		COL W. W. HIXSON	CAMLEJ			C3	P	3	1	1	3	C2	711015	
HQ BTRY, 2D FAG		CAPT D. J. JORDAN		157	5	C1		1	1	1	1			
2D 8" HOW BTRY SP		MAJ G. C. ROSS		160		C4	P	4	1	1	3	C2	711001	1/M51 VTR, 6/8" HOW SP
2D 175MM GUN BTRY		CAPT F. A. BOZANICH		119		C3	P	3	1	1	3	C2	711012	1/M51 VTR, 6/155 GUN SP, 6/175 GUN SP
5TH 175MM GUN BTRY SP		MAJ R. R. WRIGHT		134		C3	X	4	1	1	4	C2	711030	1/M51 VTR, 6/175 GUN SP
2D TANK BN (-)	25	LTCOL F. E. GRUBE	CAMLEJ	664	12	C3	P	3	1	1	3	C2	711001	17/M103 TK, 55/M48 TK, 5/M51 VTR, 9/M67 TK
2D AMTRAC BN (-)	21	LTCOL R. A. SULIK		766	14	C3	T	2	1	2	3	C1	710901	5/LVTE-1, 12/LVTP-5 COMD, 142/LVTP-5, 4/LVTR
8TH COMM BN		LTCOL R. E. HAISLIP		625	9	C2	P	2	1	2	1	C2	710901	
8TH ENGR BN		LTCOL B. A. KAASMANN		714	13	C4	P	4	3	1	3	C4	711101	
8TH MT BN		LTCOL C. W. TONNACLIFF		353	4	C2	P	2	1	1	2	C2	710914	
2D RADIO BN (-)	29	LTCOL J. T. BRASSFIELD		344	4	C3	P	3	1	2	2	C2	711030	
2D ANGLICO		LTCOL D. E. SCHNEIDER		277	12	C3	T	2	1	1	3	C2	710930	
2D FORCE RECON CO		CAPT A. G. LITTLE		138	3	C3	T	1	1	1	3	C2	710825	
2D TOPO CO		WO J. F. MCGRORY		83	1	C3	P	3	1	1	3	C2	710901	
2D BRIDGE CO		1STLT D. C. BELL		121	1	C3	P	3	1	1	3	C2	710901	
2D HOSPITAL CO		CDR D. W. HOPPING (USN)		30	21	C4	P	4	1	1	4	C3	710901	
22D DENTAL CO		CAPT W.H.HAGERMAN (USN)		5	36	C4	P	4	1	1	1	C2	710901	
2D SEP SURG CO (CADRE)		LCDR G. H. ASHTON (USN)		3	11	C4	N	5	5	5	5			
9TH SEP BULK FUEL CO(CADRE)														
2D MAW		MAJGEN G. C. AXTELL	CHERPT	14404	211	C2	X	2	2	2	3	C2	711231	
MWHS-2		COL D. G. SWINFORD		688	23	C1		1	1	1	1			
12TH FORCE DENTAL CO		CAPT J. H. SMITH (USN)		1	51	C3	P	3	1	1	1	C2	710901	
8TH CIT		WO E. J. JOHNSTON		18		C1		1	1	1	1			
6TH SSCT		1STLT V. E. STROTE		7		C2	R	1	1	2	1	C1	711001	
MATCU-78 (FMFLANT)	*	CAPT A. E. DAVIS	QUANTICO	51		C4	T	3	1	2	4	C4	711101	
MWSG-27		LTCOL W. L. RICE	CHERPT			C3	P	3	1	2	2	C3	711015	
H&MS-27 (-)		LTCOL E. J. HEISE		724	10	C2	P	2	1	1	2	C1	711209	5/C-117D, 1/C-54S
SU 1, H&MS-27 (-)		CAPT K. D. MCCURRY		42		C1		1	1	1	1			
WERS-27		MAJ R. C. BAGLEY JR.		195		C3	P	3	1	1	2	C2	711208	
VMGR-252 (2D MAW)	*	LTCOL M. V. STATZER		336	2	C3	X	3	2	2	4	C3	710901	10/KC-130F
MACG-28		LTCOL A. F. MCCALEB JR.	CHERPT			C2	P	2	2	2	2	C2	710809	
H&HS-28		MAJ E. S. OLIN		254	2	C2	T	2	1	1	2	C2	711022	
MASS-1		MAJ H. F. BAEGER		168		C3	P	3	1	1	2	C2	710930	
2D REDEYE PLAT		1STLT A. W. HEATH		41		C2	P	2	1	1	2	C2	710930	
MACS-5		MAJ J. R. THROGMORTON	BEAUFORT	204		C2	P	2	2	2	2	C2	710805	
MACS-6		MAJ A. M. YOUNGER	CHERPT	243		C3	T	2	2	2	3	C3	711001	
3D LAAM BN		LTCOL J. C. DIXON		529	11	C3	P	3	2	2	2	C3	710921	
MWCS-28		MAJ L. J. MITCHELL		190		C4	P	4	2	2	3	C4	710920	
MCCRTG-20		COL T. G. ELDER	CHERPT			C3	R	1	2	3	2	C3	710825	
H&MS-20		LTCOL V. P. HART JR.		632		C2	X	1	1	2	3	C1	711001	
VMFAT-201		LTCOL R. H. SCHULTZ		348		C3	X	3	1	1	4	C3	710915	4/F-4B, 30/F-4J
VMAT(AW)-202		LTCOL C. G. LAWSON		322		C4	R	1	2	4	2	C3	710815	13/A-6A, 3/TC-4C
VMT-203		LTCOL S. M. WILLIAMS		188	3	C3	T	2	1	1	3	C4	710901	17/TA-4F, 5/TA-4J

* PARENTHETIC UNIT INDICATES OPCON WHEN DIFFERENT FROM ORGANIZATIONAL STRUCTURE.

TAB 21-7

Unclassified [redacted]

UNCLASSIFIED

UNCLASSIFIED

MARINE CORPS COMMAND CENTER

STATUS OF FMF UNITS **

25 AUGUST 1971

UNIT *	NOTE	UNIT COMMANDER	LOCATION	STRENGTH USMC	STRENGTH USN	UNIT READINESS ☆ CURRENT RATE	RSN	P	S	R	T	EXPECTED RATE	BY	MAJOR EQUIPMENT
MHTG-40		COL R. B. ENGESSER	NEW RIVER			C1		1	1	1	1			
H&MS-40		MAJ J. P. KIZER		255	1	C1		1	1	1	1			
HMMT-401		LTCOL H. D. GRESS JR.		118		C1		1	1	1	1			12/CH-53D
HMMT-402		LTCOL J. L. FELTER		149		C1		1	1	1	1			19/CH-46F
MAG-14		COL W. R. NOWADNICK	CHERPT			C3	X	3	2	2	4	C2	710801	
H&MS-14		LTCOL R. K. SLACK		720		C2	P	2	1	1	2	C2	711001	1/A-6A, 4/EA-6A, 4/F-4B, 4/TA-4F
MABS-14 (-)		MAJ C. M. DOYLE		292	10	C3	P	3	1	2	1	C3	711001	
SU 1, MABS-14 (-)		MAJ B. L. MEEK	BOGUE, NC	223		C1		1	1	1	1			
MATCU-61		CAPT G. P. HAYES		58		C4	P	4	1	4	2	C2	710926	
VMCJ-2 (-)		LTCOL J. L. GREEN	CHERPT	356	3	C2	R	1	1	2	2	C2	711001	14/EA-6A, 9/RF-4B
DET 60, VMCJ-2 (6THFLT)	16*	MAJ R. C. CONWAY	USS SARATOGA	143	1	C1		1	1	1	1			4/EA-6A
VMA(AW)-121		MAJ E. A. BIRZER	CHERPT	196	1	C3	P	3	1	1	3	C2	710815	11/A-6A
VMA(AW)-224		LTCOL B. R. STANDLEY		283	3	C2	T	1	1	1	2	C1	710805	12/A-6A
VMA(AW)-332		LTCOL P. R. JONES JR.		192	2	C2	P	2	1	1	2	C1	710831	11/A-6A
VMFA-312		MAJ R. G. KROPP		187		C4	P	4	1	3	4	C4	711001	17/F-4B
DET 14, 2D MAW (NAS, KEY WEST)	*		KEY WEST	84		C1		1	1	1	1			5/F-4B
MAG-26		COL G. R. HUNTER	NEW RIVER			C3	R	2	2	3	3	C2	711020	
H&MS-26		MAJ C. E. CANNON		586		C2	X	2	1	1	1	C2	711016	31/CH-46F, 17/CH-53A, 11/CH-53D
MABS-26		MAJ Z. V. LAMASCUS		477	44	C4	P	4	1	1	1	C4	710901	
MATCU-64 (MAG-26)	*	CAPT D. V. ESMOND		53		C4	P	4	1	2	3	C3	710915	
VMO-1		LTCOL R. D. MYERS		189		C3	P	3	2	3	1	C3	710806	17/OV-10A
HMA-269		LTCOL L. W. SMITH		158		C4	T	4	1	1	4	C2	710901	27/AH-1J, 5/UH-1E, 2/UH-1N
HML-167		LTCOL H. S. LOWREY												
HMM-162 (32D MAU)	5*	LTCOL J. W. ALBER	32D MAU	237	3	C1	X	1	1	2	1		710831	12/CH-46F, 4/CH-53D, 2/UH-1E
HMM-261		MAJ D. R. ALLEN JR.	NEW RIVER	251		C2	R	1	1	2	1	C2	710901	25/CH-46F
HMM-263		LTCOL V. M. HAZELBAKER	QUANTICO	100		C4	P	4	4	4	4	C3	710915	20/CH-46D, 9/CH-46F
HMM-264		MAJ R. K. GOFORTH	NEW RIVER	238		C1		1	1	1	1			22/CH-46F, 4/CH-53D
HMH-362		MAJ R. F. WILEY		178		C2	R	1	1	2	1	C1	711027	17/CH-53D
HMH-461		LTCOL D. E. WEBB		191		C4	R	2	2	4	3	C3	710920	2/CH-53A, 12/CH-53D
MAG-31		COL N. B. MCCRARY	BEAUFORT			C2	X	3	1	2	3	C2	710930	
H&MS-31		LTCOL J. K. COCHRAN		671		C3	R	2	1	3	2	C3	710815	1/C-117D, 2/F-4B, 3/F-4J, 3/TA-4F
MABS-31		MAJ J. L. CUNNINGHAM		325	18	C3	P	3	1	1	3	C3	710903	
MATCU-69		CAPT W. T. FARROW		39		C4	P	4	1	2	4	C4	710925	
VMFA-251		MAJ J. M. MEAD		274	1	C2	X	2	1	2	3	C2	711001	6/F-4B, 9/F-4J
VMFA-333 (CVA-66)	3*	LTCOL R. PLANT	USS AMERICA	303	1	C2	S	1	2	1	1	C1	711231	12/F-4J
VMFA-451		LTCOL R. J. WEISS	BEAUFORT	270	1	C2	T	2	1	2	2	C2	710930	18/F-4J
MAG-32		COL I. L. MORGAN	BEAUFORT			C2	X	3	2	2	3	C2	710930	
H&MS-32		MAJ R. L. UPCHURCH		512		C2	X	3	2	2	2	C2	710901	1/C-117D, 5/TA-4F
MABS-32		MAJ H. R. PALMATEER		376	17	C3	P	3	2	2	1	C3	710901	
MATCU-63		1STLT M. M. HENDERSON		37		C3	X	4	1	2	2	C3	710915	
VMA-324		LTCOL G. J. ERTLMEIER		175	1	C2	X	2	2	2	3	C2	710730	5/A-4E, 17/A-4M
VMA-331		LTCOL P. E. BROOKSHIRE		185		C4	T	2	1	2	4	C3	711001	22/A-4E
VMA-513		LTCOL C. M. BAKER		142	2	C4	T	4	3	2	4	C3	711101	7/AV-8A
2D FSR		COL R. G. EYKYN	CAMLEJ	2098	27	C3	P	3	1	1	3	C4	711101	
H&SBN		LTCOL J. B. CANTIENY		609	19	C3	P	3	1	1	3	C2	711101	
SUPPLY BN		LTCOL J. F. FORHAN		740	8	C4	P	4	1	1	4	C4	711001	
MAINT BN		MAJ P. S. GALLIGAN		749		C3	P	3	1	1	3	C4	711001	3/LVTR, 2/M51 VTR

* PARENTHETIC UNIT INDICATES OPCON WHEN DIFFERENT FROM ORGANIZATIONAL STRUCTURE.

TAB 21-8

Unclassified

UNCLASSIFIED

[redacted] UNCLASSIFIED

MARINE CORPS COMMAND CENTER

STATUS OF FMF UNITS**

25 AUGUST 1971

UNIT	NOTE	UNIT COMMANDER	LOCATION	STRENGTH		UNIT READINESS☆								MAJOR EQUIPMENT
						CURRENT						EXPECTED		
				USMC	USN	RATE	RSN	P	S	R	T	RATE	BY	

☆UNIT READINESS RATING CATEGORY

C-1 FULLY COMBAT READY
C-2 SUBSTANTIALLY COMBAT READY
C-3 MARGINALLY COMBAT READY
C-4 NOT COMBAT READY

☆READINESS ABBREVIATIONS

P PERSONNEL READINESS
S SUPPLIES/EQUIPMENT ON HAND
R EQUIPMENT READINESS
T TRAINING READINESS
X COMMANDERS SUBJECTIVE JUDGEMENT
N RESOURCE ALLOCATION BY COGNIZANT SERVICE DOES NOT PERMIT A HIGHER C-RATING

NOTES

1. BLT 1/4 BREAKDOWN ON TAB 34.
2. 31ST MAU BREAKDOWN ON TAB 34.
3. ABOARD USS AMERICA (CVA-66).
4. ASSIGNED III MAF
5. LANFOR6THFLT 1-71 (32D MAU) BREAKDOWN ON TAB 36.
6. LANFORCARIB 1-71 BREAKDOWN ON TAB 36.
7. VMA(AW)-533 (w/10 A-6A AIRCRAFT) AT NAHA, OKINAWA, FOR TRAINING DURING THE PERIOD 16AUG-15OCT71.
8. H&SCO, CO B, 1ST SP BN IN CADRE STATUS.
9. GTMO BN (REIN) BREAKDOWN ON TAB 36-2.
10. TRUCK CO, 1ST SERV BN (CADRE).
11. CO C, 7TH ENGR BN (CADRE).
12. THIS UNIT IS BOTH ADCON/OPCON TO WERS-17 (-).
13. AIR ALERT BATTALION.
14. PERSONNEL AND EQUIPMENT CARRIED IN HQBN, 1ST MARDIV.
15. VIEQUES TRNG (DET, H&SCO, CO F, 2/2).
16. ABOARD USS SARATOGA (CVA-60).
17. INCLUDES STRENGTH CO D, 7TH ENGR BN AND 1ST PLAT, 1ST BRIDGE CO.
18. H&SCO, CO B, CO C, AND CO D, 1ST TANK BN (CADRE).
19. H&SCO, CO B, AND CO C, 3D AMTRAC BN (CADRE).
20. PERSONNEL AND EQUIPMENT CARRIED IN HQBN, 2D MARDIV.
21. ONE PLATOON IS DEPLOYED WITH LANFOR6THFLT 1-71 AND ALSO ONE PLATOON WTIH LANFORCARIB 1-71.
22. PERSONNEL AND EQUIPMENT CARRIED IN HQBN, 3D MARDIV.
23. CONDUCTING DESFEX 1-71 DURING THE PERIOD 16-31AUG71.
24. SANGLEY AUGMENTATION FORCE (DET, 4TH MARINES w/1 OFF AND 91 ENL) AT SANGLEY PT, R.P.I.
25. ONE PLATOON IS DEPLOYED WITH LANFOR6THFLT 1-71, ONE PLATOON WITH LANFORCARIB 1-71 AND ONE PLATOON WITH THE GTMO BN.
26. STRENGTH INCLUDES DET, H&SCO, DET, ENGR SPT CO, AND CO A, 1ST ENGR BN.
27. THIS UNIT IS BOTH ADCON/OPCON TO MAG-12, HOWEVER, IS PHYSICALLY LOCATED ON OKINAWA WITH THEIR STRENGTH CARRIED UNDER OKINAWA.
28. UNASSIGNED.
29. TWO OFF & 32 ENL DEPLOYED TO MOROCCO & 1 OFF & 10 ENL DEPLOYED TO GTMO ON A PERMANENT BASIS.
30. BLT 3/4 AT FUJI TRAINING (3D BN, 4TH MAR, AND BTRY I (REIN), 3D BN, 12TH MAR).

** SOURCE: MARES FORSTAT REPORT DATED 2 AUGUST 1971.

TAB 21-9

UNCLASSIFIED [redacted]

Unclassified

UNCLASSIFIED [redacted]

MARINE CORPS COMMAND CENTER

FLEET MARINE FORCE DISPOSITION

25 AUGUST 1971

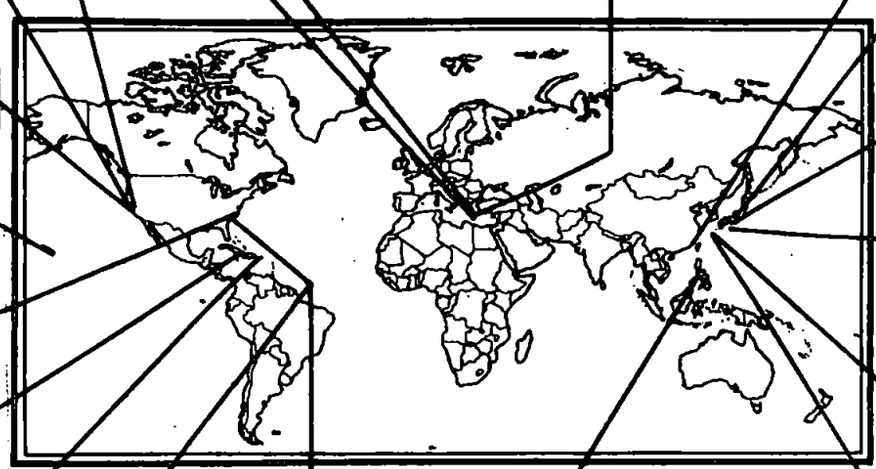

DISTRIBUTION BY BATTALION/SQUADRON

	INF BNS	VMFA	VMA	VMA(AW)	VMCJ	VMO	VMGR	HMA	HML	HMM	HMH
WESTPAC	6	2	2	1	1	1	1		1	2	1
OKINAWA	(4)	(2)	(2)	(1)	(1)		(1)		(1)	(1)	(1)
JAPAN											
LANDING FORCE	(2)									(1)	
MIDPAC	2	3								1	1
HAWAII	(2)	(3)								(1)	(1)
EASTPAC	10	4	2	2	1	1	1		1	2	2
EL TORO/SANTA ANA		(4)	(2)	(2)	(1)		(1)			(2)	(2)
CAMPEN	(10)					(1)			(1)		
ATLANTIC	8	4	3	3	1	1	1	1	1	3	2
CAMP LEJEUNE	(6)										
CHERRY POINT		(1)		(3)	(1)		(1)				
BEAUFORT		(3)	(3)								
NEW RIVER						(1)		(1)	(1)	(2)	(2)
QUANTICO										(1)	
CARIBBEAN	(2)										
EUROPE	1									1	
MEDITERRANEAN	(1)									(1)	
GRAND TOTAL	27	13	7	6	3	3	3	1	3	9	6

Unclassified
UNCLASSIFIED [redacted]

TAB 31-1

[redacted]

UNCLASSIFIED

MARINE CORPS COMMAND CENTER

25 AUGUST 1971

FLEET MARINE FORCE MOVEMENTS

	UNIT	ETD/ATD	FROM	DESTINATION	ETA/ATA
	MOVEMENTS 19 - 25 AUGUST 1971				
(4)	LANFOR6THFLT 1-71 (32D MAU)	19AUG71	PORTO SCUDO/CAPO TEULADA, SARDINIA	SOUDA BAY, CRETE	22AUG71
(7)	BLT 1/4	19AUG71	OKINAWA	ARGOPS SOUTH CHINA SEA	19AUG71
		22AUG71	ARGOPS SOUTH CHINA SEA	HONG KONG	23AUG71
(3)	VMFA-333	20AUG71	OPS CENTRAL MED	CORFU, GREECE	28AUG71
(6)	LANFOR7THFLT (31ST MAU)	25AUG71	SASEBO, JAPAN	KEELUNG/KAOHSIUNG, TAIWAN	30AUG71
	F/2/2	20AUG71	CAMP LEJEUNE, NORTH CAROLINA	VIEQUES, PUERTO RICO	20AUG71
	E/2/2	21AUG71	VIEQUES, PUERTO RICO	CAMP LEJEUNE, NORTH CAROLINA	21AUG71
	PROJECTED MOVEMENTS 26 AUGUST - 1 SEPTEMBER 1971				
(5)	DET 60, VMCJ-2	27AUG71	SOUDA BAY, CRETE (SHORE-BASED)	OPS CENTRAL MED	28AUG71
		30AUG71	OPS CENTRAL MED	BARCELONA, SPAIN	31AUG71
(4)	LANFOR6THFLT 1-71 (32D MAU)	27AUG71	SOUDA BAY, CRETE	PALMA, MALLORCA, SPAIN	31AUG71
(7)	BLT 1/4	28AUG71	HONG KONG	ARGOPS SOUTH CHINA SEA	28AUG71
		31AUG71	ARGOPS SOUTH CHINA SEA	SUBIC BAY, R.P.I.	1SEP71

NOTES:

(1) CG FMFLANT ACTIVATED THE 8TH MAB (HQ, 8TH MAB, BLT 1/2 (LANFORSIXTHFLT 2-71), BLT 3/6 AND PROV MAG-40) FOR PLANNING AND PARTICIPATION IN EXERCISE DEEP FURROW-71. EXERCISE DEEP FURROW-71 IS A JOINT AND COMBINED NATO EXERCISE TO BE CONDUCTED DURING THE PERIOD 9-20OCT71 TO INCLUDE AMPHIBIOUS LANDINGS IN TURKISH THRACE BY A COMBINED U.S. AND UNITED KINGDOM/ITALIAN LANDING FORCE. BGEN T. H. MILLER, JR., AWC 2D MAW, IS DESIGNATED AS CG 8TH MAB.

(2) CG I MAF ACTIVATED THE 7TH MAB (HQ, 7TH MAB, 7TH MARINES AND PROV MAG-50) FOR PLANNING ON 1JUL71 FOR PARTICIPATION IN ROPEVAL 3-71, A MAB SIZE AMPHIBIOUS EXERCISE TO BE CONDUCTED IN THE CAMP PENDLETON/ CLEVELAND NATIONAL FOREST AREAS DURING THE PERIOD 8-17SEP71. LANDING FORCE OPERATIONS WILL BE DESIGNED TO TRAIN FORCES IN THE PLANNING AND EXECUTION OF AMPHIBIOUS OPERATIONS INVOLVING THE TECHNIQUE OF STAND-OFF AMPHIBIOUS ASSAULT AND ASPECTS OF THE SEA-BASING CONCEPT. BGEN P. G. GRAHAM, CG, FORTRPS FMFPAC, IS DESIGNATED AS CG 7TH MAB.

(3) CONDUCTING OPERATIONS IN THE CENTRAL MED(16-27AUG71). SCHEDULED FOR A PORT VISIT AT CORFU, GREECE DURING THE PERIOD 28AUG-1SEP71.

(4) ENROUTE SOUDA BAY, CRETE, (19-21AUG71) FOR TRAINING ASHORE FROM 22-27AUG71. ENROUTE PALMA, MALLORCA, SPAIN, (28-30AUG71) FOR PORT VISIT FROM 31AUG-7SEP71.

(5) PARTICIPATING IN EXERCISE NATIONAL WEEK X (17-27AUG71) A UNILATERAL FLEET EXERCISE INVOLVING AIR, SURFACE AND SUBSURFACE UNITS OF THE SIXTH FLEET DESIGNED TO EXERCISE AND EVALUATE SIXTH FLEET CAPABILITY TO LOCATE, TRACK AND NEUTRALIZE UNITS OF A POTENTIALLY HOSTILE MEDITERRANEAN NAVAL FORCE. SCHEDULED FOR OPERATIONS IN THE CENTRAL MED (28-30AUG71) AND PORT VISIT AT BARCELONA, SPAIN, FROM 31AUG-5SEP71.

(6) COMPLETED PORT VISIT AT SASEBO, JAPAN (18-24AUG71). ENROUTE KEELUNG/KAOHSIUNG, TAIWAN, (25-30AUG71) FOR PORT VISIT FROM 30AUG-1SEP71.

(7) CONDUCTED ARGOPS IN THE SOUTH CHINA SEA (19-22AUG71). AT HONG KONG FOR PORT VISIT DURING THE PERIOD 23-27AUG71. SCHEDULED FOR ARGOPS IN THE SOUTH CHINA SEA (28-31AUG71) ENROUTE SUBIC BAY, R.P.I., FOR FOR UPKEEP (1-8SEP71).

(8) CONDUCTING DESFEX 1-71 DURING THE PERIOD 16-31AUG71.

(9) VMA(AW)-533 (W/10 A-6A AIRCRAFT) AT NAHA, OKINAWA, FOR TRAINING DURING THE PERIOD 16AUG-15OCT71.

MARINE DETACHMENTS FROM THE USS AMERICA (CVA-66), USS SARATOGA (CVA-60) AND USS SPRINGFIELD (CLG-7) ARE TRAINING ASHORE AT SOUDA BAY, CRETE, DURING THE PERIOD 22-27AUG71, WITH THE 32D MAU.

UNCLASSIFIED

Unclassified

[redacted]

TAB 31-2

UNCLASSIFIED [redacted]

MARINE CORPS COMMAND CENTER

FMF PACIFIC UNIT LOCATIONS AND STRENGTHS AND OSD CEILING CONSIDERATIONS (WESTPAC)

25 AUGUST 1971

RVN

USMC TRANSITIONAL SUPPORT FORCE

NAVFORV	5
HQ STAFF MACV	49
JUSPAO	4
SAE	2
I CORPS	3
NAV ADV GRU	80
SOG	17
DEF COM AGCY	11
SUB UNIT 1, 1ST ANGLICO	180
EMBASSY SECURITY	156
CORDS	5
NOG DET YOW-10	21
DCPG LNO	3
DET, H&HS-18	20
DOD SPEC REP	3
ROK LOG TEAM	13
CREDIT ACCOUNT	64
WESTPAC TRANS OFF	1
TOTAL - OSD PROGRAM XIII SPACE AUTHORIZATION	637

	USMC	USN
OSD PROGRAM XIII SPACE AUTHORIZATION	637	
SUB UNIT 1, 1ST ANGLICO	168	10
MACV STAFF/MACV FIELD	163	
NAVADVGRU/MACV UNITS	50	
OTHERS	172	
TOTAL RVN STRENGTH AS OF 19AUG71.	553	10

OKINAWA

III MAF (TF-79)

HQ, III MAF

3D MARDIV (-) (REIN) (TF-79.2)

HQ, 3D MARDIV (-)(REIN)
- 4TH MARINES
  - 1/4 (BLT)
  - 2/4
  - 3/4
- 9TH MARINES
  - 1/9
  - 2/9 (31ST MAU)
  - 3/9

1ST MAW

MAG-36

VMGR-152	(KC-130F)
VMO-6 (-)	(OV-10A/UH-1E)
HMH-462	(CH-53D)
HMM-164	(CH-46D/CH-53D/UH-1E)(31ST MAU)
HMM-165	(CH-46D)
HML-367	(UH-1E/AH-1G/J)

3D FSR

		USMC	USN
	OSD PROGRAM XIII SPACE AUTHORIZATION	19,249	934
	OKINAWA STRENGTH RECAPITULATION		
	III MAF		
	HQ, III MAF	131	
	3D MARDIV (-)(REIN)	12,351	780
	1ST MAW ELEMENTS	2,972	31
	3D FSR	3,105	51
(1)	III MAF TOTAL	18,559	862
	OTHERS		
	MCB CAMP BUTLER/NON FMF	1,238	25
	HOSPITALIZED	0	
	NON-DEPLOYABLE CASUALS	9	
	OTHER TOTAL	1,247	25
	GRAND TOTAL OKINAWA STRENGTH AS OF 12AUG71.	19,806	887

JAPAN

1ST MAW (TF-79.3)

HQ, 1ST MAW

MAG-12

VMA-211	(A-4E)
VMA-311	(A-4E)
VMA(AW)-533	(A-6A)

MAG-15

VMFA-115	(F-4B)
VMFA-232	(F-4J)
VMCJ-1	(EA-6A/RF-4B)

		USMC	USN
	OSD PROGRAM XIII SPACE AUTHORIZATION	7,000	
	JAPAN STRENGTH RECAPITULATION		
	HQ, 1ST MAW	851	54
	1ST MAW	4,979	70
(2)	NON-FMF	1,043	
	GRAND TOTAL JAPAN STRENGTH AS OF 12AUG71.	6,873	124

NOTES
(1) LESS ONE MAU AND SANGLEY AUGMENTATION FORCE (DET, 4TH MARINES) CONSISTING OF 1 OFFICER AND 91 ENLISTED.
(2) INCLUDES MCAS, IWAKUNI, MB YOKOSUKA, MB SASEBO AND CO "E" MAR SPT BN.

SOURCES: RVN STRENGTH: COMUSMACV WEEKLY STRENGTH REPORT MSG 210731ZAUG71.

OKI/JAPAN STRENGTH: FMFPAC WESTPAC STRENGTH VERIFICATION MSG 180007ZAUG71.

TAB 33

UNCLASSIFIED [redacted]
Unclassified

[redacted]L

UNCLASSIFIED

MARINE CORPS COMMAND CENTER

LANDING FORCES, SEVENTH FLEET

31st MAU*

18 AUGUST 1971

UNITS EMBARKED TASK GROUP 79.4	STRENGTH USMC OFF	STRENGTH USMC ENL	STRENGTH USN OFF	STRENGTH USN ENL
31ST MAU HQ DET	9	13		
COL E. F. ROTH, JR.				
BLT 2/9				
(LTCOL F. J. JOHNSON, JR.)				
2D BN, 9TH MARINES	40	1020	2	38
E/2/12TH MARINES	4	89		2
PLT, CO C, 3D RECON BN	1	23		2
PLT, CO B, 1ST AMTRAC BN	1	44		1
PLT, CO C, 3D SP BN	1	38		2
PLT, CO A, 3D MT BN	1	21		
PLT, CO A, 3D TANK BN	1	26		1
PLT, CO A, 3D ENGR BN	1	37		1
PLT, CO B, 3D MED BN		5	1	16
DET, HQBN, 3D MARDIV	1	7		
LOGISTIC SUPPORT UNIT				
DET, 3D SERV BN	1	31		1
DET, 3D FSR	1	25		
DET, 3D DENTAL CO			1	1
HMM-164	53	239	1	2
(LTCOL A. J. KETTERING)				
DET, HMH-462	8	29		
DET, HML-367	7	17		
TOTALS	130	1651	5	67

SHIPPING

USS NEW ORLEANS (LPH-11)
USS VANCOUVER (LPD-2)
USS PEORIA (LST 1183)
USS THOMASTON (LSD-28)

AIRCRAFT

13/CH-46D
4/CH-53D
4/UH-1E

ARMS & EQUIPMENT

1 LVTP-5 CMD
10 LVTP-5
5 M48 TANKS
6 105 HOW TD
8 106MM RR
8 81MM MORTAR
36 TRUCK, UTILITY PLATFORM W/O 106 RR, M-274
40 TRUCK, UTILITY, M-151 & M-715
1 TRUCK, UTILITY MRC-83
2 TRUCK, UTILITY MRC-123
4 TRUCK, UTILITY MRC-109
1 TRUCK, UTILITY MRC-124
1 TRUCK, UTILITY MRC-135
1 TRUCK, AMBULANCE M-718
1 TRUCK, CARGO 5T M-54
2 TRUCK, TANK M-49
2 TRUCK, DUMP 5T M-51
5 TRUCK, CARGO 3/4T M-37
35 TRUCK, CARGO 2½T M-35
1 TRUCK, WRECKER 5T M-543
36 TRAILER, CARGO M-416
17 TRAILER, CARGO M-105
6 TRAILER, TANK WATER M-149
2 TRAILER, CARGO M-101
2 KW LIGHT UNIT
4 TRACTOR TD-15 & TD-25
3 CRANE M-60 & M-62
1 HYPOCHLORINATION UNIT
2 TRUCK, M-43
2 ROUGH TERRAIN FORK LIFT (6000 LBS)
1 STEAM CLEANER
1 WATER PURIFICATION UNIT
1 BATH UNIT
2 GENERATOR PU 708/G & PU 692/G
4 GENERATOR PU-667 & PU 669
51 M60 MG
18 M60 MG HELO MOUNTED
39 50 CAL. HELO MOUNTED
6 60MM MORTAR
24 3.5 ROCKET LAUNCHER
8 FLAME THROWERS
10 50 CAL. MG

BLT 1/4*

25 AUGUST 1971

UNITS EMBARKED TASK GROUP 79.5	STRENGTH USMC OFF	STRENGTH USMC ENL	STRENGTH USN OFF	STRENGTH USN ENL
BLT 1/4				
(LTCOL D. G. ROBISON)				
1ST BN, 4TH MARINES	44	934	2	44
BTRY "G", (REIN), 3D BN, 12TH MAR	8	119	1	2
PLT, CO D, 3D RECON BN	1	20		
PLT, CO A, 1ST AMTRAC BN	1	39		1
PLT, CO C, 3D TANK BN	1	27		1
PLT, CO C, 9TH MT BN	1	22		
PLT, CO C, 3D ENGR BN	1	39		1
PLT, CO C, 3D SP BN	1	45		2
PLT, CO D, 3D MED BN		5	1	17
DET, 3D DENTAL CO			1	1
DET, HQBN, 3D MARDIV	1	4		
LOGISTIC SUPPORT UNIT	1	38		
DET, 3D SERV BN				
DET, 3D FSR				
DET B, HML-367				
TOTALS	60	1292	5	69

SHIPPING

USS DUBUQUE (LPD-8)
USS DURHAM (LKA-114)
USS FREDERICK (LST-1184)

AIRCRAFT

2/UH-1E

ARMS & EQUIPMENT

1 LVTP-5 CMD
10 LVTP-5
5 M48 TANKS
6 105 HOW TD
8 106MM RR
8 81MM MORTAR
33 TRUCK, UTILITY PLATFORM W/O 106 RR, M-274
30 TRUCK, UTILITY , M-151
4 TRUCK, VAN MRC-109
2 TRUCK, UTILITY M-123
2 TRUCK, UTILITY M-124
1 TRUCK, AMBULANCE M-718
2 TRUCK, AMBULANCE M-43
16 TRUCK, CARGO 2½T M-35
4 TRUCK, CARGO 3/4T M-37
2 TRUCK, TANK M-49
2 TRUCK, DUMP 5T M-51
14 TRUCK, CARGO 5T M-54
1 TRUCK, WRECKER 5T M-543
4 TRAILER, CARGO M-101
6 TRAILER, CARGO 3/4T M-101A1
15 TRAILER, CARGO M-105
4 TRAILER, TANK WATER M-149
27 TRAILER, CARGO M-416
1 30 KW GENERATOR
1 GENERATOR SET PU-720G
1 GENERATOR SET TRAILER MOUNTED PU-692G
1 BATH UNIT
1 WATER PURIFICATION UNIT
2 CONEX BOX
1 STEAM CLEANER

Unclassified

* SEE TAB 31 FOR PRESENT LOCATION

TAB 34

UNCLASSIFIED

UNCLASSIFIED

Department of Defense

NUMBER OF CASUALTIES INCURRED BY U. S. MILITARY PERSONNEL
IN CONNECTION WITH THE CONFLICT IN VIET-NAM

Cumulative from January 1, 1961 through August 14, 1971

25 AUGUST 1971

	Army	Navy *	Marine Corps	Air Force	Total
A. CASUALTIES RESULTING FROM ACTIONS BY HOSTILE FORCES					
1. Killed	25,114	1,050	11,465	455	38,084
2. Wounded or Injured					
a. Died of wounds	3,489	140	1,449	44	5,122
b. Nonfatal wounds					
Hospital care required	95,913	4,083	51,356	807	152,159
Hospital care not required	103,832	5,834	37,161	2,295	149,122
3. Missing	1,636	182	5	394	2,217
a. Died while missing	48	7	6	26	87
b. Returned to control	259	113	81	558	1,011
c. Current missing					
4. Captured or Interned					
a. Died while captured or interned	15	-	3	1	19
b. Returned to control	56	3	5	6	70
c. Current captured or interned	62	144	23	236	465
5. Deaths					
a. From aircraft accidents/incidents					
Fixed Wing	89	155	139	694	1,077
Helicopter	2,218	62	429	59	2,768
b. From ground action	27,947	1,155	12,354	141	41,597
TOTAL DEATHS a/	30,254	1,372	12,922	894	45,442
B. CASUALTIES NOT THE RESULT OF ACTIONS BY HOSTILE FORCES					
6. Current Missing	128	-	12	-	140
7. Deaths					
a. From aircraft accidents/incidents					
Fixed Wing	250	172	45	279	746
Helicopter	1,694	52	242	18	2,006
b. From other causes	4,712	608	1,391	261	6,972
TOTAL DEATHS	6,656	832	1,678	558	9,724

a/ Sum of lines 1, 2a, 3a and 4a.

*Navy figures include a small number of Coast Guard casualties.

Department of Defense
OASD (Comptroller)
Directorate for Information Operations
August 18, 1971

TAB 45-2

UNCLASSIFIED

Unclassified

UNCLASSIFIED

MARINE CORPS COMMAND CENTER

25 AUGUST 1971

DISPOSITION AND STRENGTH OF MAJOR US AND FW FORCES IN RVN

DISPOSITION

MR RECAP

MR I*		XXIV CORPS
220 MILES LENGTH@		30-75 MILES WIDTH
14,600 SQ MI AREA		2,860,300 CIV POP
		101ST ABN DIV (AM)
USA	19 BNs	23D INF DIV(AMERICAL)
ARVN	36 BNs	2D ROKMC BDE
ROKMC	4 BNs	147TH VNMC BDE
VNMC	6 BNs	258TH VNMC BDE
ARVN CAV	4 BNs	1ST ARVN DIV
		2D ARVN DIV
TOTAL	69 BNs	
MR II*		SRAG (NHA TRANG)
315 MILES LENGTH@		45-130 MILES WIDTH
31,300 SQ MI AREA		2,898,200 CIV POP
USA	4 BNs	173D ABN BDE
ARVN	31 BNs	ROK CAP INF DIV
ROK	18 BNs	9TH ROK DIV
ARVN CAV	3	22D ARVN DIV
TOTAL	56 BNs	23D ARVN DIV
MR III*		TRAC (LONG BINH)
90 MILES LENGTH@		55-115 MILES WIDTH
10,100 SQ MI AREA		5.133.000 CIV POP
USA	5 BNs	2D BDE, 25TH INF DIV
ARVN	55 BNs	1ST AUSTRALIAN TF
AUSTRALIA	2 BNs	ROYAL THAI VOL REGT
THAILAND	3 BNs	1ST CAV DIV (AM)
ARVN CAV	5 BNs	5TH ARVN DIV
VNMC	3 BNs	18TH ARVN DIV
		25TH ARVN DIV
TOTAL	73 BNs	369TH VNMC BDE
		1ST ARVN ABN DIV
MR IV*		DRAC (CAN THO)
195 MILES LENGTH@		35-115 MILES WIDTH
14,600 SQ MI AREA		5,700,1000 CIV POP
ARVN	41 BNs	7TH ARVN DIV
ARVN CAV	5 BNs	9TH ARVN DIV
		21ST ARVN DIV
TOTAL	46 BNs	

@ Coastal Arc

* See RVN Recap note

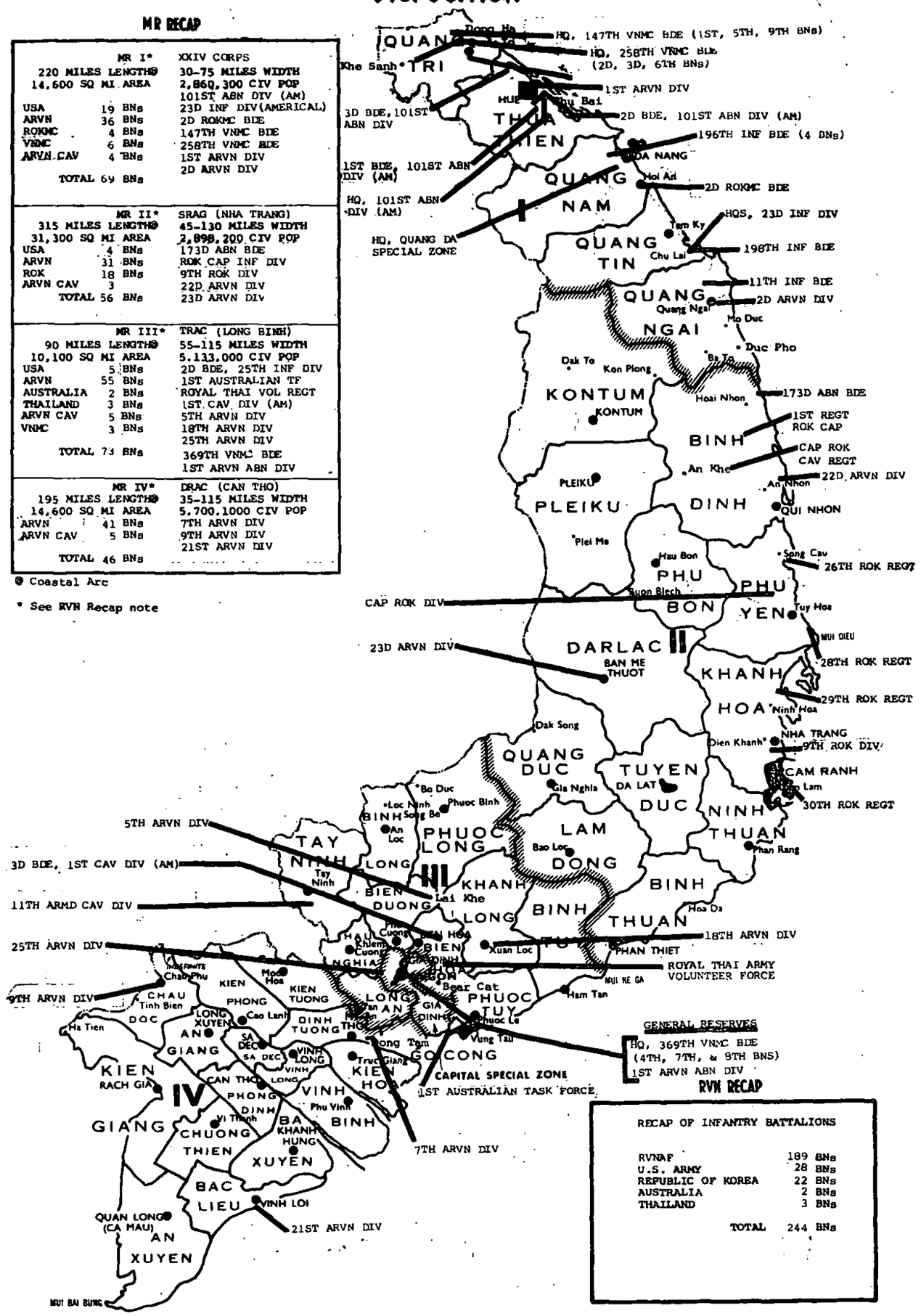

RVN RECAP

RECAP OF INFANTRY BATTALIONS	
RVNAF	189 BNs
U.S. ARMY	28 BNs
REPUBLIC OF KOREA	22 BNs
AUSTRALIA	2 BNs
THAILAND	3 BNs
TOTAL	244 BNs

TAB 46-1

Unclassified
UNCLASSIFIED

UNCLASSIFIED
[redacted]

MARINE CORPS COMBAT CENTER

STRENGTHS*

25 AUGUST 1971

RVN ARMED FORCES (RVNAF)

ARMY (ARVN)	412,705
NAVY (VNN)	41,184
AIR FORCE (VNAF)	50,245
MARINE CORPS (VNMC)	13,806
REGIONAL FORCES (RF)	295,019
POPULAR FORCES (PF)	247,638
TOTAL RVNAF	1,060,597

UNITED STATES FORCES

ARMY	173,581
NAVY	9,962
AIR FORCE	35,954
MARINE CORPS	553
COAST GUARD	99
TOTAL U.S.	220,149

FREE WORLD MILITARY ASSISTANCE FORCES (FWMAF)

REPUBLIC OF KOREA	48,561
AUSTRALIA	6,087
PHILIPPINES	83
THAILAND	8,161
NEW ZEALAND	274
REPUBLIC OF CHINA	31
SPAIN	7
TOTAL FWMAF	63,204

TOTAL FORCES IN RVN	1,343,950

★ SOURCE: RVNAF - MACV MONTHLY RPT OF GVN STRENGTH AS OF

ALL OTHERS - MACV WEEKLY STRENGTH RPT AS OF 2400, 19AUG71.

Unclassified
UNCLASSIFIED
~~CONFIDENTIAL~~

TAB 46-2

UNCLASSIFIED

MARINE CORPS COMMAND CENTER

REPUBLIC OF KOREA MARINE CORPS

25 AUGUST 1971

Commandant: General LEE, BYUNG MOON

Senior Marine Advisor: Colonel Howard T. PITTMAN, USMC

Strength: 32,360 (JUN71)

The Headquarters of the Republic of Korea Marine Corps (ROKMC) is located in Seoul. Marine Barracks are located in Seoul and the major Naval Bases at Inchon, Mokpo, Chejudo, Chinhae, Pusan, and Mukho. The ROKMC Supply and Maintenance Depot as well as the ROK Marine Schools Base are located at Chinhae. The Schools Base offers Recruit Training, NCO School, Supply School, LVT School, Officer Candidate Course, Drill Instructor School, Senior Amphibious Warfare School, English Language Training, and the ROKMC Command and Staff College. The ROK Marine Corps Amphibious Base at Pohang houses the 1st ROKMC Division (-), Special Training Unit to support ROK Marine personnel assigned to the 2d ROKMC Brigade (Blue Dragons) in Vietnam. The ROKMC is operationally organized as indicated below:

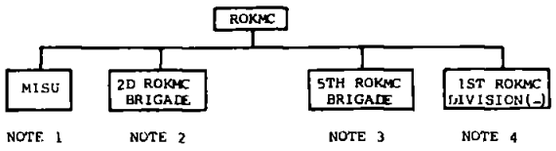

NOTE 1: Marine Island Security Unit (MISU) is a defense force approximating a reinforced Infantry Battalion in size and weaponry. It is located on the offshore islands of the Westerly extension of the DMZ mandated to the United Nations. Although it is administratively controlled by HQ, ROKMC, it is under the operational control of Commander, ROK Fleet. The organization of the MISU is indicated on Chart 1.

NOTE 2: The 2d ROK Marine Brigade is deployed to the Republic of Vietnam and organization is indicated on Chart 2.

NOTE 3: The 5th ROK Marine Brigade is currently deployed in a defensive role along the DMZ on the Kimpo Peninsula. It is administratively controlled by HQ, ROKMC but is under the operational control of I Corps (Group), Eighth U. S. Army. It is considered the Brigade would be fixed in position in the event of open hostilities in Korea and could not be readily redeployed without major adjustment in combat unit locations within the the United Nation Command during peacetime. The Brigade was initially formed from the assets of the 1st ROKMC Division and represents those units which the division is minus at this time. The current organization of the 5th Brigade is indicated on Chart 3.

NOTE 4: The 1st ROKMC Division (-) located at Pohang is administratively controlled by HQ, ROKMC and under the operational control of Commander, Naval Forces Korea. It is designated as the strategic Reserve for the Defense of the ROK. The organization for the Division (-) is indicated on Chart 4. It should be noted that the Amphibian Tractor Battalion is presently equipped with the LVT-3C.

MARINE ISLAND SECURITY UNIT (MISU)

COMMANDING OFFICER:
BGEN HUR HONG

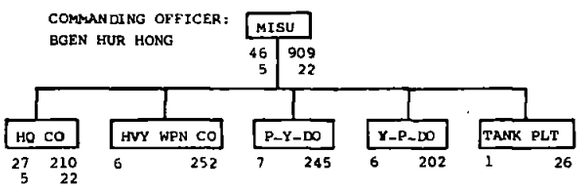

CHART #1

5TH ROK MARINE BRIGADE

COMMANDING GENERAL:
BGEN KIM, Suk Ku

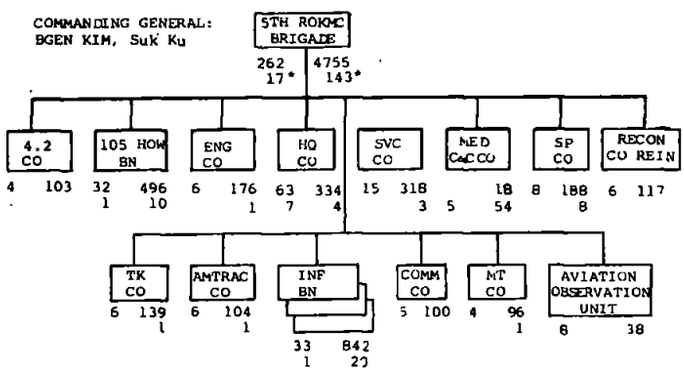

CHART #3

2D ROK MARINE BRIGADE

Strength: 6,133 (AUG71)

COMMANDING GENERAL:
MGEN LEE, Dong Yong

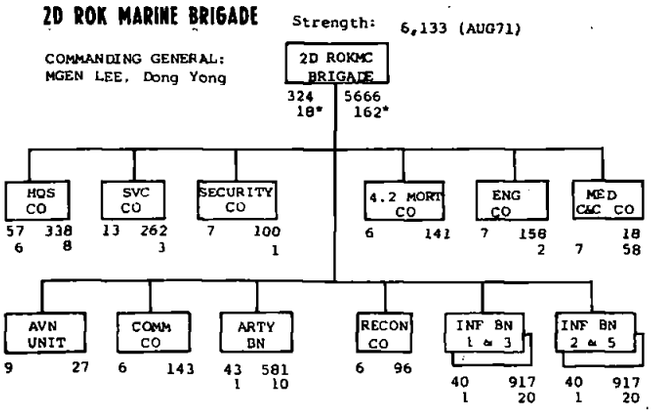

CHART #2

FIRST ROK MARINE DIVISION (-)

COMMANDING GENERAL:
MGEN KIM, YUN SANG

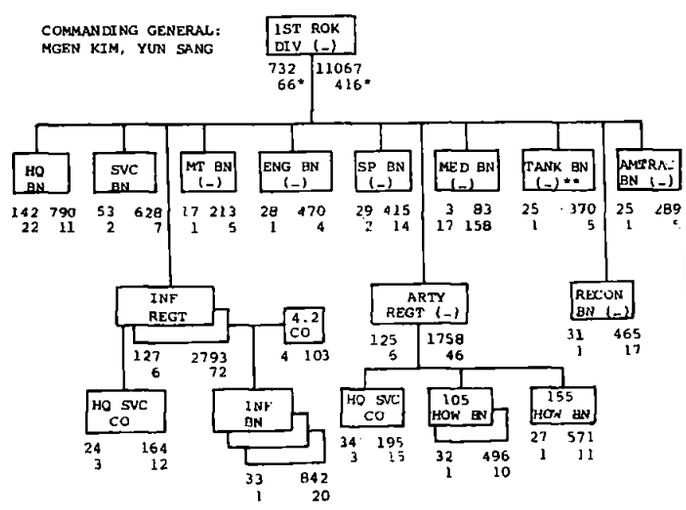

CHART #4

* Second line of figures under each block indicates ROK Navy personnel.
** Minus includes 1 Co Tanks assigned 5th Brigade and 1 Platoon Tanks attached MISU.

TAB 48-1

Unclassified
UNCLASSIFIED

UNCLASSIFIED
[redacted]

MARINE CORPS COMMAND CENTER

TABLE OF CONTENTS

1 SEPTEMBER 1971

	LIST OF EFFECTIVE TABS	DATE OF LATEST CHANGE
SECTION I - MARINE CORPS FORCES - WORLD WIDE		
ALLOCATION OF MARINE CORPS PERSONNEL	11	28JUL71
SELECTED PERSONNEL AND AIRCRAFT DATA	12	1SEP71●
UNITED STATES MARINE CORPS RESERVE	13-1	30DEC70
	13-2	23DEC70
	13-3	4AUG71
	13-4	23DEC70
MISCELLANEOUS NON-FMF UNITS	14-1	14JUL71
(MARINE BARRACKS)	14-2	30JUN71
(MARINE SECURITY GUARD BATTALION)	14-3	14APR71
(MARINE DETACHMENTS AFLOAT)	14-4	14APR71
	14-5	30JUN71
SECTION II - STATUS OF FLEET MARINE FORCES		
STATUS OF FMF UNITS	21-1	1SEP71●
	21-2	1SEP71●
	21-3	1SEP71●
	21-4	1SEP71●
	21-5	11AUG71
	21-6	1SEP71●
	21-7	1SEP71●
	21-8	1SEP71●
	21-9	1SEP71●
RECAPITULATION OF FMF ACTUAL STRENGTHS	22	1SEP71●
DISTRIBUTION OF MAJOR GROUND EQUIPMENT AND AIRCRAFT	23	1SEP71
SECTION III - DISPOSITION OF FLEET MARINE FORCE UNITS		
FLEET MARINE FORCE DISPOSITION, DISTRIBUTION BY BATTALION/ SQUADRON AND MOVEMENTS	31-1	1SEP71●
	31-2	1SEP71●
FMF PACIFIC UNIT LOCATIONS AND STRENGTHS (MIDPAC/EASTPAC)	32	1SEP71●
FMF PACIFIC UNIT LOCATIONS, STRENGTHS AND OSD CEILING CONSIDERATIONS (WESTPAC)	33	1SEP71●
LANDING FORCES - 7TH FLEET	34	25AUG71
FMF ATLANTIC UNIT LOCATIONS AND STRENGTHS	35	1SEP71●
LANDING FORCES - MEDITERRANEAN AND CARIBBEAN	36-1	11AUG71
GUANTANAMO BAY BATTALION	36-2	1SEP71●
SECTION IV - GENERAL		
CHRONOLOGY OF SIGNIFICANT EVENTS	41-1	17MAR71
	41-2	21APR71
	41-3	23JUN71
	41-4	16JUN71
	41-5 (missing)	1SEP71
USMC/ENEMY CASUALTIES IN RVN; CUMULATIVE DOD CASUALTY FIGURES ON U.S. MILITARY PERSONNEL AND COMPARATIVE USMC/ENEMY KIA IN CONNECTION WITH THE CONFLICT IN RVN	45-1	28JUL71
	45-2	1SEP71●
	45-3	26MAY71
	45-4	1SEP71●
DISPOSITION AND STRENGTH OF MAJOR U.S. AND FW FORCES IN RVN	46-1	1SEP71●
	46-2	1SEP71●
COMUSMACV STAFF, PRINCIPAL MARINE OFFICERS HQ MACV	47	1SEP71●
REPUBLIC OF KOREA MARINE CORPS	48-1	25AUG71
REPUBLIC OF VIETNAM MARINE CORPS	48-2	7JUL71
VIETNAM GEOGRAPHIC AND CLIMATE DATA	49-1	18NOV70
	49-2	18NOV70
CHRONOLOGY OF FMF DEPLOYMENT AND STRENGTH IN RVN	410-1	20JAN71
	410-2	25NOV70
	410-3	25NOV70
	410-4	25NOV70
	410-5	25NOV70
	410-6	25NOV70
	410-7	9DEC70
	410-8	10MAR71
	410-9	19MAY71
	410-10	23JUN71
	410-11	21JUL71
	410-12	21JUL71

CONTENTS OF THIS PUBLICATION
DOWNGRADED AT 3 YEAR INTERVALS
DECLASSIFIED AFTER 12 YEARS
DOD DIR 5200.10

UNCLASSIFIED
[redacted]
Unclassified

MARINE CORPS
SEP 3 1971
REFERENCE BRANCH

Unclassified

[redacted]

UNCLASSIFIED

MARINE CORPS COMMAND CENTER

SELECTED PERSONNEL AND AIRCRAFT DATA

PERSONNEL

1 SEPTEMBER 1971

		STRENGTH	PERCENT USMC	PERCENT FMF	PERCENT FMFPAC
USMC TOTAL	*	211,301	100.00		
FLEET MARINE FORCES		99,029	46.85	100.00	
FMF ATLANTIC	#	38,258	18.11	38.63	
FMF PACIFIC	#	60,771	28.74	61.37	
VIETNAM	¢	529	00.25		

SOURCE: * HQMC 1080-20 (ESTIMATED PERSONNEL DATA) AS OF 31JUL71.
MARES FORSTAT REPORT DATED 2AUG71.
¢ MACV WEEKLY STRENGTH REPORT AS OF 26AUG71.

AIRCRAFT

11 AUGUST 1971

		FIXW	HELO	TOTAL	PERCENT USMC	PERCENT FMF	PERCENT FMFPAC
USMC TOTALS	**	771	607	1,378	100.00		
FLEET MARINE FORCES	@	695	566	1,261	91.51	100.00	
FMF ATLANTIC	@	324	275	599	43.47	47.50	
FMF PACIFIC	@	371	291	662	48.04	52.50	

SOURCE: ** DC/S AIR STATUS BOARD PHOTO AS OF 10AUG71.
@ MARES FORSTAT REPORT DATED 2AUG71.

TAB 12

Unclassified

UN[redacted]

[redacted] UNCLASSIFIED

MARINE CORPS COMMAND CENTER

STATUS OF FMF UNITS **

1 SEPTEMBER 1971

UNIT *	NOTE	UNIT COMMANDER	LOCATION	STRENGTH USMC	STRENGTH USN	UNIT READINESS ☆ CURRENT RATE	RSN	P	S	R	T	EXPECTED RATE	BY	MAJOR EQUIPMENT
FMF				99029	3051									
MIDPAC				5654	167									
FMFPAC		LTGEN W. K. JONES	HAWAII	60771	2019	C1		1	1	1	1			
HQ FMFPAC				1060	35									
HQSBN		COL R. G. HAUFFER	CP SMITH	997	27	C1		1	1	1	1			
DET 2, 21ST DENTAL CO (-)		CAPT M. R. HAMILTON (USN)			8	C1		1	1	1	1			
HQ SQDN		LTCOL C. E. DORFFELD	KANEOHE	63		C4	P	4	1	1	1	C4	710731	5/T-28B, 2/UH-34D, 1/US-2D, 1/VH-34D
1ST ANGLICO (-)		MAJ H. S. MORGAN JR.	SDIEGO	153	3	C3	S	2	3	2	3	C2	710831	
SU 1, 1ST ANGLICO (MACV)	*	LTCOL D. GRAY	SAIGON	168	10	C1		1	1	1	1			
1ST RADIO BN		LTCOL J. K. HYATT JR.	KANEOHE	400		C1		1	1	1	1			
1ST MARINE BRIGADE		BGEN V. A. ARMSTRONG	KANEOHE	3873	119	C4	P	4	2	2	3	C3	711031	
H&S CO		CAPT H. J. TRAUTWEIN JR.		242	15	C1		1	1	1	1			
1ST ITT		1STLT R. R. SCOTT		11		C1		1	1	1	1			
11TH CIT (CADRE) (FMFPAC)	*	CAPT K. W. CLEM				C4	N	5	5	5	5			
21ST DENTAL CO (-)		CDR J. D. CRAWFORD (USN)			13	C1		1	1	1	1			
3D MARINES (-) (REIN)		LTCOL J. P. CONNOLLY II	KANEOHE			C4	P	4	1	1	4	C3	711031	
HQCO (-)		CAPT E. P. MUSSETT JR.		66		C4	P	4	1	1	4	C3	711031	
1ST BN	23	MAJ P. J. KIESELBACH		807	53	C3	P	3	1	1	3	C2	711031	6/105 HOW TD, 8/106MM RR, 8/81 MORT
2D BN		MAJ F. W. BEEKMAN		4		C4	N	5	3	2	5	C3	711031	8/106MM RR, 8/81 MORT
CO A, 3D ENGR BN (-)		CAPT T. M. COOK		93		C3	P	3	2	2	2	C2	711031	
CO A (REIN), 3D MT BN (-)		1STLT R. S. DOLGERT		19		C4	P	4	1	1	4	C3	711031	
CO A (REIN), 3D SP BN (-) (CADRE)		CAPT R. F. BAKER		26		C4	P	4	1	1	4	C3	711031	
CO A, 3D RECON BN (-) (REIN) (CADRE)		CAPT P. M. KATANA		10		C4	P	4	1	1	4	C3	711031	
CO A (REIN), 3D MED BN (-) (CADRE)					4	C4	P	4	1	1	4	C3	711031	
1ST BN (-), 12TH MAR		MAJ R. J. COOGAN	KANEOHE	101		C4	P	4	1	1	4	C3	711031	18/105 HOW TD
CO D, 3D AMTRAC BN (-)		CAPT K. R. BURNS		138		C4	P	4	1	2	4	C3	711001	3/LVTP-5 COMD, 44/LVTP-5, 1/LVTR
COMM SPT CO, 7TH COMM BN (-)		MAJ R. T. HIMMERICH		242		C3	R	3	2	3	2	C2	711230	
PROV SERV BN		LTCOL J. W. BROWN		220		C4	P	4	4	3	4	C3	711231	
MAG-24		COL R. E. CAREY	KANEOHE	1894	34	C1	X	4	2	3	4	C3	710915	
H&MS-24		LTCOL C. L. PHILLIPS		508		C4	S	2	4	4	2	C3	710901	1/C-117D, 5/CH-46A, 2/TA-4F
MABS-24		LTCOL W. R. LEDBETTER		338	34	C4	P	4	2	2	2	C3	710915	
MATCU-70		WO O. F. GOUR JR.		40		C4	P	4	2	1	4	C1	710801	
VMFA-122		LTCOL L. FURSTENBERG		170		C4	P	4	4	4	4	C3	711101	7/F-4B
VMFA-212		LTCOL R. D. REVIE		212		C3	X	4	1	3	3	C2	710704	13/F-4J
VMFA-235		MAJ G. H. LEACH		215		C3	X	4	1	1	4	C2	711231	16/F-4J
MACS-2	*	LTCOL P. L. ELLIOTT		168		C4	P	4	1	2	3	C3	711101	
HMM-262		MAJ C. M. LIVELY		130		C4	N	5	1	2	5			30/CH-46D
HMH-463		MAJ M. E. EDWARDS		113		C4	P	4	1	4	4	C3	711101	15/CH-53D
DET, VMO-6 (-)						C4	P	4	4	4	4	C3	711231	3/OV-10A
DET, HML-367 (-)						C4	P	4	1	1	4	C3	711231	8/UH-1E
WESTPAC				26580	986									
FMFPAC														
III MAF		LTGEN D. J. ROBERTSON	CP COURTNEY	26580	986									
H&SCO				131		C1		1	1	1	1			
3D MARDIV(-)(REIN) (III MAF)	*	MAJGEN L. METZGER	CP COURTNEY	14431	780	C2	T	1	1	1	2	C2	720601	
HQBN		COL H.A.F.VONDERHEYDE		1683	46	C2	T	1	1	2	2	C2	720601	
3D ITT	22	WO T. F. SINGLEY	CP HANSEN											
7TH ITT	22	CAPT E. N. SIBLEY												
11TH ITT	22	1STLT M. C. MONAHAN												
15TH ITT	22	WO J. W. STANLEY												
17TH ITT	22	CAPT G. H. JOHNSON JR.												
SCAMP	22													
3D CIT		CAPT R. E. SHROYER		14		C1		1	1	1	1			
1ST SSCT		CAPT T. L. STROHECKER	CP COURTNEY	11		C3	S	1	3	1	1	C1	710805	
3D DENTAL CO		CAPT W. J. KENNEDY (USN)		4	66	C1		1	1	1	1			

* PARENTHETIC UNIT INDICATES OPCON WHEN DIFFERENT FROM ORGANIZATIONAL STRUCTURE.

TAB 21-1

[redacted]

Unclassified

UNCLASSIFIED

[redacted]

UNCLASSIFIED

MARINE CORPS COMMAND CENTER

STATUS OF FMF UNITS **

1 SEPTEMBER 1971

UNIT *	NOTE	UNIT COMMANDER	LOCATION	STRENGTH USMC	STRENGTH USN	UNIT READINESS ☆ CURRENT RATE	RSN	P	S	R	T	EXPECTED RATE	BY	MAJOR EQUIPMENT
4TH MARINES		COL R. J. PERRICH	CP HANSEN			C2	T	2	1	1	2	C2	720601	
HQCO		CAPT S. M. HARTNETT		203	8	C2	T	1	1	1	2	C2	720601	
1STBN	1	LTCOL D. G. ROBISON		978	46	C2	P	2	1	1	2	C1	710825	8/106MM RR, 8/81 MORT
2DBN	13	LTCOL J. PHILLIPS		991	37	C2	R	2	1	2	2	C1	710930	8/106MM RR, 8/81 MORT
3DBN	30	LTCOL W. J. HALLISEY JR.	FUJI	988	42	C2	P	2	1	1	2	C1	710930	8/106MM RR, 8/81 MORT
9TH MARINES		COL R. T. LAWRENCE	CP SCHWAB			C2	T	1	1	1	2	C1	710805	
HQCO		CAPT M. H. CRAFTON JR.		238	5	C2	R	1	1	2	2	C1	710930	
1STBN		LTCOL P. B. FRIEDRICHS		1028	34	C2		2	1	2	1	C1	710915	8/106MM RR, 8/81 MORT
2DBN (31ST MAU)	2*	LTCOL F. J. JOHNSON JR.	31ST MAU	1060	40	C1		1	1	1	1			8/106MM RR, 8/81 MORT
3DBN		LTCOL B. S. SNELL	CP SCHWAB	976	40	C2	P	2	1	2	2	C1	711115	7/106MM RR, 8/81 MORT
12TH MARINES (-)		COL J. P. O'CONNELL	CP HANSEN			C2	T	2	1	1	2	C1	710805	
HQ BTRY (-)		CAPT D. J. LABOISSIERE		221	7	C2	R	1	1	2	2	C1	710905	
2DBN		LTCOL E. D. LITZENBERGER		516	16	C2	T	2	1	1	2	C2	711205	18/105 HOW TD
3DBN	30	LTCOL W. J. HALLISEY		467	15	C2	T	2	1	1	2	C2	711205	18/105 HOW TD
4THBN (-) (REIN)		LTCOL K. G. PATTERSON		479	12	C2	P	2	1	2	2	C2	711201	1/M51 VTR, 17/155 HOW SP
3D PLAT, 1ST 8" HOW BTRY	4													2/8" HOW SP
3D SERV BN (-)		COL E. B. HART	CP HANSEN	769	27	C2	T	1	1	1	2	C1	710825	
3D TANK BN (-)		LTCOL C. R. STIFFLER		573	16	C2	T	2	1	1	2	C2	720601	53/M48 TANK, 5/M51 VTR 8/M67 TANK
9TH MT BN (-)		MAJ M. F. SCANLON		295	9	C2	T	1	1	1	2	C2	711114	
3D MED BN (-)		LTCOL F. E. CLARK JR.		137	199	C3	S	3	3	3	2	C2	711001	
1ST HOSPITAL CO (CADRE)		LTJG J. W. VRABEL (USN)		23	23	C4	P	4	1	2	4	C4	711231	
3D MT BN (-)		MAJ B. L. PARKS	CP SCHWAB	133	6	C2	T	1	1	1	2	C2	720601	
3D RECON BN (-)		LTCOL T. R. STUART		362	24	C2	T	1	1	1	2	C1	711001	
3D ENGR BN (-) (REIN)	17	LTCOL C. R. GIBSON		684	8	C2	P	2	1	2	2	C1	711001	
CO D (REIN), 7TH ENGR BN(-)		CAPT H. L. CAMPBELL	CP HAGUE	141		C3	P	3	2	2	2	C2	711201	
BRIDGE PLAT, 1ST BRIDGE CO		1STLT R. M. RAPP		18										
7TH COMM BN (-)		LTCOL W. A. SCOTT JR.	CP SCHWAB	463	8	C2	T	2	1	2	2	C2	720601	
3D SP BN (-)		LTCOL R. L. ANDERTON	CP HAGUE	380	36	C2	T	1	1	2	2	C2	720701	
1ST AMTRAC BN (-)		LTCOL J. G. BUCKMAN	CP SCHWAB	596	10	C2	P	2	2	2	2	C1	710905	3/LVTE-1, 9/LVTP-5 CMD, 76/LVTP-5, 3/LVTR
1ST MAW (III MAF)	*	MAJGEN R. G. OWENS JR.	IWAKUNI	8913	155	C2	R	2	2	2	2	C2	711001	
JAPAN (1ST MAW ELEMENTS)				5854	124									
MWHS-1		COL W. C. KELLY	IWAKUNI	819	22	C2	S	1	2	2	2	C1	710801	
7TH CIT (1ST MAW)	*	WO J. A. CANONICO		20		C1		1	1	1	1			
11TH FORCE DENTAL CO (-)		CDR J. J. LYONS (USN)		2	32	C1		1	1	1	1			
3D SSCT		CAPT G. G. MEYERS		10		C2	X	1	1	1	1	C1	710801	
MACG-18 (-)		COL E. M. JONES	IWAKUNI			C2	R	2	1	2	2	C2	711021	
H&HS-18 (-)		MAJ L. E. OBENHAUS		190		C2	R	2	2	2	2	C1	710901	
MASS-2 (-)		LTCOL T. G. DAVIS		184		C2	R	1	2	2	2	C1	711110	
MWCS-18		MAJ R. S. KAYE		292		C2	P	2	2	2	2	C2	711021	
MAG-12		COL E. J. RUTTY	IWAKUNI			C2	R	2	2	2	1	C2	711001	
H&MS-12		LTCOL K. D. CURRY JR.		550		C2	R	1	1	2	2	C2	711020	
MABS-12		LTCOL J. L. DRIEFER		377	20	C2	R	2	1	2	2	C2	711031	
MATCU-62 (MAG-12)	*	CAPT A. E. PETERS		39		C4	P	4	1	1	2	C3	711001	
VMA-211		LTCOL W. E. WILSON		211	1	C2	R	2	2	2	1	C2	711030	19/A-4E
VMA-311		LTCOL K. L. BATT		186	1	C2	P	2	2	2	1	C2	711002	24/A-4E
VMA(AW)-533	7	LTCOL R. P. SPRIER	NAHA	249		C2	R	2	1	2	1	C2	711001	12/A-6A
OTHER														
SU 2, H&MS-36			FUJI	7	17									3/CH-46D

* PARENTHETIC UNIT INDICATES OPCON WHEN DIFFERENT FROM ORGANIZATIONAL STRUCTURE.

TAB 21- 2

Unclassified

[redacted]

UNCLASSIFIED

[redacted] UNCLASSIFIED

MARINE CORPS COMMAND CENTER

STATUS OF FMF UNITS **

1 SEPTEMBER 1971

UNIT *	NOTE	UNIT COMMANDER	LOCATION	STRENGTH USMC	STRENGTH USN	UNIT READINESS ☆ CURRENT RATE	RSN	P	S	R	T	EXPECTED RATE	BY	MAJOR EQUIPMENT
MAG-15		COL R. R. MILLER	IWAKUNI			C2	T	2	2	2	2	C1	710915	
H&MS-15		MAJ M. P. CADY		554		C2	R	1	1	2	1	C1	711001	4/TA-4F
MABS-15		MAJ R. L. BECKWITH		368	21	C2	R	2	1	2	2	C2	710731	
MATCU-60 (MAG-15)	•	CAPT D. L. HENDRIX		56		C2	P	2	1	1	2	C1	710801	
VMFA-115		LTCOL R. R. POWELL	CUBI PT.	289	1	C2	T	2	2	2	2	C2	711001	14/F-4B
VMFA-232		LTCOL J. L. GREGORCYK	IWAKUNI	318	1	C2	T	2	1	2	2	C1	710815	16/F-4J
VMCJ-1 (1ST MAW)	•	LTCOL S. S. EISENHAUER		341	1	C3	X	2	1	2	4	C2	711006	6/EA-6A, 9/RF-4B
MWSG-17		COL W. G. MCCOOL	IWAKUNI			C3	R	1	2	3	2	C2	710801	
H&MS-17		LTCOL W. R. LIMBACH		568	7	C3	R	1	2	3	2	C2	710901	4/C-117D, 3/C-54Q/R/S
WERS-17 (-)		MAJ A. L. FRUCCI		224		C2	R	1	2	2	2	C1	710815	
OKINAWA (1ST MAW ELEMENTS)				3059	31									
MAG-36		COL R. J. ZITNIK	FUTEMA			C2	R	1	2	2	1	C2	710924	
H&MS-36 (-)		LTCOL D. A. SPURLOCK		576		C2	S	1	2	2	1	C1	710901	9/CH-46D, 6/UH-1E
SU 1, H&MS-36 (-)		MAJ F. W. CRONE		51		C2	R	1	1	2	1	C1	710911	4/AH-1J
MABS-36		LTCOL V. J. GUINEE JR.		521	24	C2	R	2	1	2	2	C1	710830	
MATCU-66 (MAG-36)	•	CAPT K. R. CLARK		56		C2	P	2	1	2	2	C2	710925	
MATCU-68 (MAG-36)	•	WO L. R. COXE		16		C4	P	4	2	2	4	C4	711015	
HMM-164 (31ST MAU)	2*	LTCOL A. J. KETTERING	31ST MAU	285	3	C2	R	1	2	2	1	C1	710815	13/CH-46D, 4/CH-53D, 4/UH-1E
HMM-165		LTCOL P. L. MOREAU	FUTEMA	254		C2	R	1	2	2	1	C1	710810	20/CH-46D
HMH-462 (-)	2	LTCOL D. G. MCDONALD		262	1	C2	R	1	1	2	1	C1	710901	17/CH-53D
VMO-6 (-)		LTCOL J. L. NORTON		206		C2	R	1	2	2	1	C1	710901	11/OV-10A
VMGR-152 (1ST MAW)	•	LTCOL R. W. DUPHINEY		293	1	C4	R	2	4	4	3	C3	710831	6/KC-130F
HML-367 (-)		MAJ R. SANCHO		167		C1		1	1	1	1			12/UH-1E
OTHERS														
DET, MASS-2 (-)			FUTEMA											
SU 1, WERS-17 (-)	12	WO E. W. HICKS		51		C1		1	1	1	1			
SU 1, H&MS-12 (-)	27	CAPT R. D. PITTS	NAHA	49		C2	S	1	2	2	1	C1	710730	
MACS-4		LTCOL R. D. MILLER	FUTEMA	272	2	C3	T	2	1	2	3	C2	710923	
3D FSR		COL R. E. ROEDER JR.	CP FOSTER	3105	51	C3	S	2	3	3	2	C2	710915	
H&S BN		LTCOL J. B. HARRIS SR.		890	25	C3	R	2	3	3	2	C2	710915	
SUPPLY BN		LTCOL J. W. FRIBERG		1212	26	C3	S	2	3	2	2	C2	710915	
NOP, 3D FSR (3D FSR)	•	CAPT C. W. SHIVER		45		C1		1	1	1	1			
MAINT BN		LTCOL H. I. FREY		958		C3	S	2	3	3	2	C2	710915	2/LVTE-1, 1/106MM RR, 1/81 MORT
EASTPAC				28537	866									
FMFPAC														
I MAF		MAJGEN R. T. DWYER JR.	CAMPEN	21		C3	X	2	4	4	2	C2	710901	
1ST MAR DIV (-) (REIN)		MAJGEN R. T. DWYER JR.	CAMPEN	14348	524	C4	P	4	2	3	4	C4	711001	
HQBN		COL R. N. BURHANS		1780	60	C4	P	4	2	2	4	C4	711001	3/81 MORT
1ST CIT		CAPT B. B. VORONIN		20		C1		1	1	1	1			
5TH ITT	14	CAPT R. A. KAROLY				C3	P	3	1	1	3	C3	710901	
9TH ITT	14	CAPT L. J. JANSEN				C1		1	1	1	1			
19TH ITT	14	1STLT G. D. JENNINGS				C4	P	4	1	1	4	C4	711101	
21ST ITT	14	2DLT M. M. LINCOLN				C4	P	4	1	1	4	C3	711001	
23D ITT	14	CAPT R. D. TOMLIN				C1		1	1	1	1			
25TH ITT	14	CAPT H. K. LEE				C4	P	4	1	1	4	C4	711001	
2D SSCT		WO E. L. HANEY		8		C4	R	1	1	4	1	C3	710901	
SCAMP		CAPT A. L. SELLECK JR.		24										
COMM SPT CO, 9TH COMM BN (-)		MAJ R. R. ANDERSON		299		C2	R	1	1	2	1	C2	711001	
1ST CIVIL AFFAIRS GRP (CADRE)		CAPT R. S. GRISCHKOWSKY		23		C4	P	4	1	1	4	C4	711001	
1ST MARINES		LTCOL E. J. BONARS				C4	S	3	4	4	3	C3	711001	
HQCO		CAPT V. L. SCHULTZ		186	10	C3	S	2	3	3	2	C2	711101	
1ST BN		LTCOL C. A. BARSTOW		1258	10	C4	R	3	3	4	3	C3	711001	8/106MM RR, 8/81 MORT
2D BN		LTCOL A. LUKEMAN		1055	17	C4	S	2	4	3	2	C3	711001	8/106MM RR, 8/81 MORT
3D BN		LTCOL M. HUNTER		1048	27	C3	S	3	3	3	3	C2	711001	8/106MM RR, 8/81 MORT

* PARENTHETIC UNIT INDICATES OPCON WHEN DIFFERENT FROM ORGANIZATIONAL STRUCTURE.

TAB 21-3

Unclassified

UNCLASSIFIED

[redacted] UNCLASSIFIED

MARINE CORPS COMMAND CENTER

STATUS OF FMF UNITS**

1 SEPTEMBER 1971

UNIT *	NOTE	UNIT COMMANDER	LOCATION	STRENGTH USMC	STRENGTH USN	UNIT READINESS☆ CURRENT RATE	RSN	P	S	R	T	EXPECTED RATE	EXPECTED BY	MAJOR EQUIPMENT
3D BN, 3D MARINES (CADRE)		MAJ F. G. HUTCHINSON JR.	CAMPEN	112	2	C4	N	5	4	4	5			7/106MM RR
5TH MARINES		LTCOL M. J. HOCHENAUER	CAMPEN			C4	P	4	4	4	4	C4	711001	
HQCO		CAPT J. R. WILLIAMS		88	10	C4	P	4	4	3	4	C4	711001	
1ST BN		MAJ W. T. MACY		132	6	C4	P	4	4	4	4	C4	711001	1/106MM RR, 6/81 MORT
2D BN		MAJ J. A. LINNEMANN		198	4	C4	P	4	4	4	4	C4	711001	
3D BN		CAPT M. B. DARLING		139	7	C4	P	4	4	4	4	C4	711001	8/106MM RR
7TH MARINES		COL A. A. MONTI	CAMPEN			C3	P	3	1	2	3	C3	711001	
HQCO		1STLT P. E. MILLER		221	12	C2	S	1	2	2	1	C1	711001	
1ST BN (CADRE)		MAJ R. C. HALL		409	7	C4	N	5	3	3	5			8/106MM RR, 8/81 MORT
2D BN		LTCOL T. L. SULLIVAN		1136	44	C2	T	1	1	1	2	C1	711101	8/106MM RR, 7/81 MORT
3D BN	13	LTCOL R. J. MILLE		1104	41	C2	T	1	1	1	2	C1	710901	8/106MM RR, 8/81 MORT
11TH MARINES (-) (REIN)		COL W. R. GRUBAUGH	CAMPEN			C4	P	4	3	4	4	C4	711001	
HQ BTRY		1STLT W. T. WILLIAMS		183		C4	P	4	4	4	4	C4	711001	6/M-30 MORT
1ST BN		LTCOL R. J. HENLEY		627	1	C4	P	4	2	4	4	C4	711001	18/105 HOW TD
2D BN (CADRE)		MAJ L. E. KOLEBER		217	2	C4	P	4	4	4	4	C4	711001	
3D BN		MAJ W. A. HALL		657	18	C2	T	1	1	1	2	C1	711001	18/105 HOW TD
1ST MT BN (REIN)		CAPT E. R. WHITING		306	5	C3	R	1	2	3	2	C2	711001	
CO B, 9TH MT BN (-)		CAPT R. F. WILLIAMS		77	1	C3	X	4	1	1	4	C2	710901	
1ST RECON BN		CAPT R. E. MILLER		267	5	C4	P	4	2	3	4	C4	711001	
1ST FORCE RECON CO		CAPT D. L. COOK		71	3	C4	P	4	2	3	4	C4	711001	
1ST TANK BN (REIN)	18	LTCOL H. G. EDEBOHLS		417	21	C4	P	4	2	2	4	C4	711001	5/M-51 VTR, 7/M-67 TANK, 15/M103 TANK, 25/M48 TANK
CO D, 3D TANK BN (-) (CADRE)														
1ST ENGR BN		MAJ J. T. SCHULTZ		480	6	C4	P	4	4	4	4	C4	711001	
7TH ENGR BN (-) (REIN)	11	MAJ C. N. WALL		382	14	C4	P	4	2	3	4	C4	711001	
1ST BRIDGE CO (-)(CADRE)		1STLT D. N. TAYLOR JR.		52		C4	P	4	1	4	4	C4	711001	
1ST SP BN	8	MAJ F. L. EDWARDS JR.		247	17	C4	P	4	1	2	4	C4	711001	
3D AMTRAC BN (-)	19	MAJ J. P. SENIK		368	17	C4	P	4	2	2	4	C4	711001	5/LVTE-1, 8/LVTP-5 COMD, 70/LVTP-5, 3/LVTR
1ST SERV BN (REIN)	10	COL G. K. REID		732	33	C4	P	4	1	2	4	C4	711001	
1ST SEARCHLIGHT BTRY (CADRE)								5	5	5	5			
7TH SEP BULK FUEL CO (CADRE)								5	5	5	5			
1ST MED BN		LCDR C. A. ROPER (USN)		44	82	C4	P	4	3	4	4	C4	711001	
1ST DENTAL CO		CAPT J. F. KING (USN)		3	42	C4	P	4	1	1	4	C4	711001	
FORCE TROOPS FMFPAC		BGEN P. G. GRAHAM	29 PALMS	1495	75	C4	X	4	2	3	3			
HQCO		MAJ E. L. ROTTSOLK		173	9	C1		1	1	1	1			
NOP, 1ST FSR		CAPT T. R. GERIES		49		C1		1	1	1	1			
9TH COMM BN (-)		LTCOL D. J. GARRET		376	12	C4	P	4	1	2	3	C3	710901	
13TH CIT (FORTRPS FMFPAC)	*	CAPT A. G. WILSON		16		C1		1	1	1	1			
DET 1, 21ST DENTAL CO (-)		CAPT G. W. WALTER (USN)		2	21	C4	S	1	4	4	1	C3	711001	
1ST FAG		LTCOL R. O. GILLICK	29 PALMS	19		C4	P	4	2	3	4	C3	710802	
HQ BTRY, 1ST FAG		1STLT G. R. MABRY		132	13	C2	T	1	1	2	2	C1	710802	
1ST 8" HOW BTRY SP (-)		CAPT J. P. FARRELL		136		C3	P	3	2	2	3	C3	710915	1/M-51 VTR, 4/8" HOW SP
1ST 175MM GUN BTRY SP		CAPT M. T. OWENS JR.		65		C4	P	4	1	3	4	C3	710802	1/M-51 VTR, 6/175 GUN SP
3D 175MM GUN BTRY SP		CAPT D. L. ROSENBERG		94		C4	P	4	3	4	4	C3	710802	1/M-51 VTR, 6/175 GUN SP
4TH BN, 11TH MAR (1ST FAG)	*	LTCOL D. W. SANFORD		304	2	C4	P	4	2	3	4	C3	710915	1/M-51 VTR, 18/155 HOW SP
CO A (REIN), 7TH ENGR BN(-)		CAPT P. A. PANKEY	29 PALMS	107		C4	P	4	1	2	3	C3	710802	
3D HOSPITAL CO (CADRE)		LT W. L. NICHOLS (USN)		22	18	C4	X	4	4	3	4			

* PARENTHETIC UNIT INDICATES OPCON WHEN DIFFERENT FROM ORGANIZATIONAL STRUCTURE.

TAB 21-4

[redacted]

Unclassified

UNCLASSIFIED

[redacted] UNCLASSIFIED

MARINE CORPS COMMAND CENTER

STATUS OF FMF UNITS **

1 SEPTEMBER 1971

UNIT *	NOTE	UNIT COMMANDER	LOCATION	STRENGTH USMC	STRENGTH USN	UNIT READINESS ☆ CURRENT RATE	RSN	P	S	R	T	EXPECTED RATE	EXPECTED BY	MAJOR EQUIPMENT
MHTG-30		COL R. BIANCHI	SANTA ANA			C2	R	1	1	2	1	C1	710901	
H&MS-30		MAJ D. G. DUNLAP		290	1	C1		1	1	1	1			4/CH-46F, 2/CH-53A
HMHT-301		MAJ D. A. DALRYMPLE		171		C2	P	2	2	1	1	C1	710901	8/CH-53A
HMHT-302		LTCOL R. G. RITCHIE		186		C1		1	1	1	1			16/CH-46F
MCCRTG-10		COL R. B. SINCLAIR	YUMA			C2	P	1	2	2	1	C2	711130	
H&MS-10		MAJ J. R. CALLISON		424	6	C1		1	1	1	1			
VMFAT-101		LTCOL T. R. MOORE		375	4	C2	P	2	2	2	2	C1	711231	19/F-4B
VMAT-102		LTCOL R. D. REID		270	3	C3	P	3	2	2	1	C2	711031	25/A-4E
VMT-103		MAJ B. H. FREEMAN		212	3	C2	R	1	2	2	1	C1	710930	14/TA-4F, 4/TA-4J
1ST FSR		COL H. C. REED	CAMPEN	1564	44	C3	P	3	2	2	3	C2	711001	
H&SBN		MAJ R. E. JOHNSON		408	23	C3	P	3	2	2	3	C2	711001	
SUPPLY BN		MAJ R. J. WEBB		631	21	C2	P	2	2	2	2	C1	711001	
MAINT BN		MAJ A. A. MCVITTY		523		C3	P	3	2	2	3	C2	711001	
EAST COAST														
FMFLANT		LTGEN E. E. ANDERSON	NORFOLK	38258	1032	C1		1	1	1	1			
HQ FMFLANT				806	4									
HQBN		COL L. H. EVINE		726	4	C2	P	2	1	1	2	C1	711001	
HQ SQDN		LTCOL D. PRUDHOMME		80		C2	X	4	2	1	1	C1	710901	1/C-131F, 1/C-54T, 2/T-28B, 1/UH-34D, 1/US-2A, 2/US-2B
2D MAR DIV		BGEN R. D. BOHN	CAMLEJ	15562	644	C2	P	2	1	1	2	C3	710930	
HQBN		COL G. R. HERSHEY		1812	35	C2	R	1	1	2	1	C1	710831	
2D ITT	20	WO G. L. ANDERSON												
4TH ITT	20	2DLT R. L. LAMBERT												
6TH ITT	20	MSGT R. L. GONYO												
SCAMP	20													
2D MARINES		COL C. B. REDMAN	CAMLEJ			C2	P	2	1	1	2	C1	710831	
HQCO		CAPT G. W. SCHLITZ		262	5	C1		1	1	1	1			
1ST BN	13	LTCOL A. M. GRAY		1087	31	C3	T	1	1	1	3	C2	710830	8/106MM RR, 8/81 MORT
2D BN	15	LTCOL M. ROJO JR.		945	19	C3	P	3	1	1	3	C2	710930	8/106MM RR, 8/81 MORT
3D BN (-) (32D MAU)	5*	LTCOL T. J. WILLIS	MED	945	33	C1		1	1	1	1			8/106MM RR, 8/81 MORT
SU 1, H&SCO, 3D BN (2D MAR)	*	1STLT J. R. LOWEY	CAMLEJ	22		C4	N	5	5	5	5			
6TH MARINES		COL F. R. KRAINCE	CAMLEJ			C2	P	2	1	1	2	C1	710831	
HQCO		CAPT R. J. SNOWDEN		264	6	C1		1	1	1	1			
1ST BN	6	LTCOL T. F. QUALLS		921	33	C2	P	2	1	1	1	C1	710930	6/106MM RR, 6/81 MORT
2D BN		LTCOL J. T. ENOCH		994	20	C2	P	2	1	1	2	C1	710831	8/106MM RR, 8/81 MORT
3D BN		MAJ S. B. WANNER		913	31	C3	P	3	1	1	1	C2	710930	8/106MM RR, 8/81 MORT
8TH MARINES		COL E. M. YOUNG	CAMLEJ			C2	P	2	1	1	1	C1	710930	
HQCO	23	1STLT H. L. SAWYER		231	14	C1		1	1	1	1			
1ST BN		LTCOL J. K. COODY		854	21	C2	P	2	1	1	2	C1	711031	8/106MM RR, 8/81 MORT
2D BN (-)	9	LTCOL D. O. PAREDES	GTMO	707	22	C2	P	2	1	1	1	C1	710930	8/106MM RR, 8/81 MORT
CO E, 2D BN		1STLT H. R. WEHUNT	CAMLEJ	293	2	C4	N	5	5	5	5			
3D BN	23	MAJ J. T. BOWLIN		877	20	C3	P	3	1	1	1	C2	710930	8/106MM RR, 8/81 MORT
10TH MARINES		COL C. R. BURROUGHS	CAMLEJ			C4	F	4	1	1	2	C3	710930	
HQ BTRY		1STLT R. R. HARRIS		246	6	C1		1	1	1	1			
1ST BN	23	LTCOL J. A. LIVINGSTONE		420	10	C4	P	4	1	1	2	C3	710930	18/105 HOW TD
2D BN		MAJ J. W. ROSS		375	10	C4	P	4	1	1	2	C3	710930	18/105 HOW TD
3D BN		LTCOL R. F. MOODY		366	10	C4	P	4	1	1	2	C3	710930	18/105 HOW TD
4TH BN		LTCOL R. F. BELLI		281	7	C4	F	4	1	1	2	C3	710930	1/M-51 VTR, 18/185 HOW SP

* PARENTHETIC UNIT INDICATES OPCON WHEN DIFFERENT FROM ORGANIZATIONAL STRUCTURE.

TAB 21-6

[redacted]

Unclassified

UNCLASSIFIED

[redacted] UNCLASSIFIED

MARINE CORPS COMMAND CENTER

STATUS OF FMF UNITS **

1 SEPTEMBER 1971

UNIT *	NOTE	UNIT COMMANDER	LOCATION	STRENGTH USMC	STRENGTH USN	UNIT READINESS ☆ CURRENT RATE	RSN	P	S	R	T	EXPECTED RATE	BY	MAJOR EQUIPMENT
2D SERV BN		COL S. DAVIS	CAMLEJ	912	33	C2	P	2	1	1	2	C1	710930	
2D MT BN		LTCOL W. S. GERICHTEN		241	6	C2	P	2	1	1	1	C1	710930	
2D ENGR BN		MAJ W. W. WIDENER		590	10	C3	P	3	1	1	3	C2	710930	
2D RECON BN		MAJ G. E. STRICKLAND		417	13	C2	T	1	1	1	2	C1	710831	
2D SP BN		MAJ R. J. KENWORTHY		433	8	C2	P	2	1	2	2	C1	710930	
2D MED BN		CDR P. S. O'HALLORAN (USN)		154	179	C4	P	4	2	2	2	C3	710831	
2D DENTAL CO		CAPT A.P.GIAMMISSO(USN)			60	C2	P	2	1	1	1	C1	710930	
FORTPS, FMFLANT		BGEN J. C. FEGAN	CAMLEJ	5194	146	C3	P	3	1	1	2	C3	711101	
HQCO		MAJ R. M. OTTERAAEN		474		C1		1	1	1	1			
2D CIT		1STLT R. H. OSBON JR.		16		C1		1	1	1	1			
5TH CIT		CAPT W. A. BROWN		11		C4	P	4	1	1	1	C4	711201	
2D FAG		COL W. W. HIXSON	CAMLEJ			C3	P	3	1	1	3	C2	711015	
HQ BTRY, 2D FAG		CAPT D. J. JORDAN		157	5	C1		1	1	1	1			
2D 8" HOW BTRY SP		MAJ G. C. ROSS		160		C4	P	4	1	1	3	C2	711001	1/M51 VTR, 6/8" HOW SP
2D 175MM GUN BTRY		CAPT F. A. BOZANICH		119		C3	P	3	1	1	3	C2	711012	1/M51 VTR, 6/155 GUN SP, 6/175 GUN SP
5TH 175MM GUN BTRY SP		MAJ R. R. WRIGHT		134		C3	X	4	1	1	4	C2	711030	1/M51 VTR, 6/175 GUN SP
2D TANK BN (-)	25	LTCOL F. E. GRUBE	CAMLEJ	664	12	C3	P	3	1	1	3	C2	711001	17/M103 TK, 55/M48 TK, 5/M51 VTR, 9/M67 TK
2D AMTRAC BN (-)	21	LTCOL R. A. SULIK		766	14	C3	T	2	1	2	3	C1	710901	5/LVTE-1, 12/LVTP-5 COMD, 142/LVTP-5, 4/LVTR
8TH COMM BN		LTCOL R. E. HAISLIP		625	9	C2	P	2	1	2	1	C2	710901	
8TH ENGR BN		LTCOL B. A. KAASMANN		714	13	C4	P	4	3	1	3	C4	711101	
8TH MT BN		LTCOL C. W. TONNACLIFF		353	4	C2	P	2	1	1	2	C2	710914	
2D RADIO BN (-)	29	LTCOL J. T. BRASSFIELD		344	4	C3	P	3	1	2	2	C2	711030	
2D ANGLICO		LTCOL D. E. SCHNEIDER		277	12	C3	T	2	1	1	3	C2	710930	
2D FORCE RECON CO		CAPT A. G. LITTLE		138	3	C3	T	1	1	1	3	C2	710825	
2D TOPO CO		WO J. F. MCGRORY		83	1	C3	P	3	1	1	3	C2	710901	
2D BRIDGE CO		1STLT D. C. BELL		121	1	C3	P	3	1	1	3	C2	710901	
2D HOSPITAL CO		CDR D. W. HOPPING (USN)		30	21	C4	P	4	1	1	4	C3	710901	
22D DENTAL CO		CAPT W.H.HAGERMAN (USN)		5	36	C4	P	4	1	1	1	C2	710901	
2D SEP SURG CO (CADRE)		LCDR G. H. ASHTON (USN)		3	11	C4	N	5	5	5	5			
9TH SEP BULK FUEL CO(CADRE)														
2D MAW		MAJGEN G. C. AXTELL	CHERPT	14598	211	C2	X	2	2	2	3	C2	711231	
MWHS-2		COL D. G. SWINFORD		688	23	C1		1	1	1	1			
12TH FORCE DENTAL CO		CAPT J. H. SMITH (USN)		1	51	C3	P	3	1	1	1	C2	710901	
8TH CIT		WO E. J. JOHNSTON		18		C1		1	1	1	1			
6TH SSCT		1STLT V. E. STROTE		7		C2	R	1	1	2	1	C1	711001	
MATCU-78 (FMFLANT)	*	CAPT A. E. DAVIS	QUANTICO	51		C4	T	3	1	2	4	C4	711101	
MWSG-27		LTCOL W. L. RICE	CHERPT			C3	P	3	1	2	2	C3	711015	
H&MS-27 (-)		LTCOL E. J. HEISE		724	10	C2	P	2	1	1	2	C1	711209	5/C-117D, 1/C-54S
SU 1, H&MS-27 (-)		CAPT K. D. MCCURRY		42		C1		1	1	1	1			
WERS-27		MAJ R. C. BAGLEY JR.		195		C3	P	3	1	1	2	C2	711208	
VMGR-252 (2D MAW)	*	LTCOL M. V. STATZER		336	2	C3	X	3	2	2	4	C3	710901	10/KC-130F
MACG-28		LTCOL A. F. MCCALEB JR.	CHERPT			C2	P	2	2	2	2	C2	710809	
H&HS-28		MAJ E. S. OLIN		254	2	C2	T	2	1	1	2	C2	711022	
MASS-1		MAJ H. F. SAEGER		168		C3	P	3	1	1	2	C2	710930	
2D REDEYE PLAT		1STLT A. W. HEATH		41		C2	P	2	1	1	2	C2	710930	
MACS-5		MAJ J. R. THROGMORTON	BEAUFORT	204		C2	P	2	2	2	2	C2	710805	
MACS-6		MAJ A. M. YOUNGER	CHERPT	243		C3	T	2	2	2	3	C3	711001	
3D LAAM BN		LTCOL J. C. DIXON		529	11	C3	P	3	2	2	2	C3	710921	
MWCS-28		MAJ L. J. MITCHELL		190		C4	P	4	2	2	3	C4	710920	
MCCRTG-20		COL R. D. WALLACE	CHERPT			C3	R	1	2	3	2	C3	710825	
H&MS-20		LTCOL V. P. HART JR.		632		C2	X	1	1	2	3	C1	711001	
VMFAT-201		LTCOL R. H. SCHULTZ		348		C3	X	3	1	1	4	C3	710915	4/F-4B, 30/F-4J
VMAT(AW)-202		LTCOL C. G. LAWSON		322		C4	R	1	2	4	2	C3	710815	13/A-6A, 3/TC-4C
VMT-203		LTCOL S. M. WILLIAMS		188	3	C3	T	2	1	1	3	C4	710901	17/TA-4F, 5/TA-4J

* PARENTHETIC UNIT INDICATES OPCON WHEN DIFFERENT FROM ORGANIZATIONAL STRUCTURE.

TAB 21-7

[redacted]

Unclassified

UNCLASSIFIED

UNCLASSIFIED
[redacted]

MARINE CORPS COMMAND CENTER

STATUS OF FMF UNITS **

1 SEPTEMBER 1971

UNIT *	NOTE	UNIT COMMANDER	LOCATION	STRENGTH USMC	STRENGTH USN	UNIT READINESS ☆ CURRENT RATE	RSN	P	S	R	T	EXPECTED RATE	EXPECTED BY	MAJOR EQUIPMENT
MHTG-40		COL R. B. ENGESSER	NEW RIVER			C1		1	1	1	1			
H&MS-40		MAJ J. P. KIZER		255	1	C1		1	1	1	1			
HMHT-401		LTCOL H. D. GRESS JR.		118		C1		1	1	1	1			12/CH-53D
HMMT-402		LTCOL J. L. FELTER		149		C1		1	1	1	1			19/CH-46F
MAG-14		COL W. R. NOWADNICK	CHERPT			C3	X	3	2	2	4	C2	710801	
H&MS-14		LTCOL R. A. SLACK		720		C2	P	2	1	1	2	C2	711001	1/A-6A, 4/EA-6A, 4/F-4B, 4/TA-4F
MABS-14 (-)		MAJ C. M. DOYLE		292	10	C3	P	3	1	2	1	C3	711001	
SU 1, MABS-14 (-)		MAJ B. L. MEEK	BOGUE, NC	223		C1		1	1	1	1			
MATCU-61		CAPT G. P. HAYES		58		C4	P	4	1	4	2	C2	710926	
VMCJ-2 (-)		LTCOL A. W. REALSEN	CHERPT	356	3	C2	R	1	1	2	2	C2	711001	14/EA-6A, 9/RF-4B
DET 60, VMCJ-2 (6THFLT)	16*	MAJ R. C. CONWAY	USS SARATOGA	143	1	C1		1	1	1	1			4/EA-6A
VMA(AW)-121		MAJ E. A. BIRZER	CHERPT	196	1	C3	P	3	1	1	3	C2	710815	11/A-6A
VMA(AW)-224		LTCOL B. R. STANDLEY		283	3	C2	T	1	1	1	2	C1	710805	12/A-6A
VMA(AW)-332		LTCOL C. L. COMFORT		192	2	C2	P	2	1	1	2	C1	710831	11/A-6A
VMFA-312		MAJ R. G. KROPP		187		C4	P	4	1	3	4	C4	711001	12/F-4B
DET 14, 2D MAW (NAS, KEY WEST)	*		KEY WEST	84		C1		1	1	1	1			5/F-4B
MAG-26		COL G. R. HUNTER	NEW RIVER			C3	R	2	2	3	3	C2	711020	
H&MS-26		MAJ C. E. CANNON		586		C2	X	2	1	1	1	C2	711016	31/CH-46F, 17/CH-53A, 11/CH-53D
MABS-26		MAJ Z. V. LAMASCUS		477	44	C4	P	4	1	1	1	C4	710901	
MATCU-64 (MAG-26)	*	CAPT D. V. ESMOND		53		C4	P	4	1	2	3	C3	710915	
VMO-1		LTCOL J. D. PIERCE		189		C3	P	3	2	3	1	C3	710806	17/OV-10A
HMA-269		LTCOL L. W. SMITH		158		C4	T	4	1	1	4	C2	710901	27/AH-1J, 5/UH-1E, 2/UH-1N
HML-167		LTCOL H. S. LOWREY JR.		194		C4	S	4	4	4	4	C3	711001	5/UH-1E, 10/UH-1N
HMM-162 (32D MAU)	5*	LTCOL J. W. ALBER	32D MAU	237	3	C1	X	1	1	2	1		710831	12/CH-46F, 4/CH-53D, 2/UH-1E
HMM-261		MAJ D. R. ALLEN JR.	NEW RIVER	251		C2	R	1	1	2	1	C2	710901	25/CH-46F
HMM-263		LTCOL V. M. HAZELBAKER	QUANTICO	100		C4	P	4	4	4	4	C3	710915	20/CH-46D, 9/CH-46F
HMM-264		MAJ R. K. GOFORTH	NEW RIVER	238		C1		1	1	1	1			22/CH-46F, 4/CH-53D, 4/AH-1J
HMH-362		MAJ R. F. WILEY		178		C2	R	1	1	2	1	C1	711027	17/CH-53D
HMH-461		LTCOL D. E. WEBB		191		C4	R	2	2	4	3	C3	710920	2/CH-53A, 12/CH-53D
MAG-31		COL N. B. MCCRARY	BEAUFORT			C2	X	3	1	2	3	C2	710930	
H&MS-31		LTCOL J. K. COCHRAN		671		C3	R	2	1	3	2	C3	710815	1/C-117D, 2/F-4B, 3/F-4J, 3/TA-4F
MABS-31		MAJ J. L. CUNNINGHAM		325	18	C3	P	3	1	1	3	C3	710903	
MATCU-69		CAPT W. T. FARROW		39		C4	P	4	1	2	4	C4	710925	
VMFA-251		MAJ J. M. MEAD		274	1	C2	X	2	1	2	3	C2	711001	6/F-4B, 9/F-4J
VMFA-333 (CVA-66)	3*	LTCOL R. PLANT	USS AMERICA	303	1	C2	S	1	2	1	1	C1	711231	12/F-4J
VMFA-451		LTCOL R. J. WEISS	BEAUFORT	270	1	C2	T	2	1	2	2	C2	710930	18/F-4J
MAG-32		COL I. L. MORGAN	BEAUFORT			C2	X	3	2	2	3	C2	710930	
H&MS-32		MAJ R. L. UPCHURCH		512		C2	X	3	2	2	2	C2	710901	1/C-117D, 5/TA-4F
MABS-32		MAJ H. R. PALMATEER		376	17	C3	P	3	2	2	1	C3	710901	
MATCU-63		1STLT M. M. HENDERSON		37		C3	X	4	1	2	2	C3	710915	
VMA-324		LTCOL G. J. ERTLMEIER		175	1	C2	X	2	2	2	3	C2	710730	5/A-4E, 17/A-4M
VMA-331		LTCOL P. E. BROOKSHIRE		185		C4	T	2	1	2	4	C3	711001	22/A-4E
VMA-513		LTCOL C. M. BAKER		142	2	C4	T	4	3	2	4	C3	711101	7/AV-8A
2D FSR		COL R. G. EYKYN	CAMLEJ	2098	27	C3	P	3	1	1	3	C4	711101	
H&SBN		LTCOL J. B. CANTIENY		609	19	C3	P	3	1	1	3	C2	711101	
SUPPLY BN		LTCOL J. F. FORHAN		740	8	C4	P	4	1	1	4	C4	711001	
MAINT BN		MAJ P. S. GALLIGAN		749		C3	P	3	1	1	3	C4	711001	3/LVTR, 2/M51 VTR

* PARENTHETIC UNIT INDICATES OPCON WHEN DIFFERENT FROM ORGANIZATIONAL STRUCTURE.

TAB 21-8

[redacted]
Unclassified
UNCLASSIFIED

[redacted]T

UNCLASSIFIED

MARINE CORPS COMMAND CENTER

STATUS OF FMF UNITS**

1 SEPTEMBER 1971

UNIT	NOTE	UNIT COMMANDER	LOCATION	STRENGTH		UNIT READINESS☆								MAJOR EQUIPMENT
						CURRENT						EXPECTED		
				USMC	USN	RATE	RSN	P	S	R	T	RATE	BY	

☆UNIT READINESS RATING CATEGORY

C-1 FULLY COMBAT READY
C-2 SUBSTANTIALLY COMBAT READY
C-3 MARGINALLY COMBAT READY
C-4 NOT COMBAT READY

☆READINESS ABBREVIATIONS

P PERSONNEL READINESS
S SUPPLIES/EQUIPMENT ON HAND
R EQUIPMENT READINESS
T TRAINING READINESS
X COMMANDERS SUBJECTIVE JUDGEMENT
N RESOURCE ALLOCATION BY COGNIZANT SERVICE DOES NOT PERMIT A HIGHER C-RATING

NOTES

1. BLT 1/4 BREAKDOWN ON TAB 34.
2. 31ST MAU BREAKDOWN ON TAB 34.
3. ABOARD USS AMERICA (CVA-66).
4. ASSIGNED III MAF
5. LANFOR6THFLT 1-71 (32D MAU) BREAKDOWN ON TAB 36.
6. LANFORCARIB 1-71 BREAKDOWN ON TAB 36.
7. VMA(AW)-533 (w/10 A-6A AIRCRAFT) AT NAHA, OKINAWA, FOR TRAINING DURING THE PERIOD 16AUG-15OCT71.
8. H&SCO, CO B, 1ST SP BN IN CADRE STATUS.
9. GTMO BN (REIN) BREAKDOWN ON TAB 36-2.
10. TRUCK CO, 1ST SERV BN (CADRE).
11. CO C, 7TH ENGR BN (CADRE).
12. THIS UNIT IS BOTH ADCON/OPCON TO WERS-17 (-).
13. AIR ALERT BATTALION.
14. PERSONNEL AND EQUIPMENT CARRIED IN HQBN, 1ST MARDIV.
15. VIEQUES TRNG (DET, H&SCO, CO F, 2/2).
16. ABOARD USS SARATOGA (CVA-60).
17. INCLUDES STRENGTH CO D, 7TH ENGR BN AND 1ST PLAT, 1ST BRIDGE CO.
18. H&SCO, CO B, CO C, AND CO D, 1ST TANK BN (CADRE).
19. H&SCO, CO B, AND CO C, 3D AMTRAC BN (CADRE).
20. PERSONNEL AND EQUIPMENT CARRIED IN HQBN, 2D MARDIV.
21. ONE PLATOON IS DEPLOYED WITH LANFOR6THFLT 1-71 AND ALSO ONE PLATOON WTIH LANFORCARIB 1-71.
22. PERSONNEL AND EQUIPMENT CARRIED IN HQBN, 3D MARDIV.
23. ENROUTE CAMPEN TO PARTICIPATE IN ROPEVAL 3-71.
24. UNASSIGNED.
25. ONE PLATOON IS DEPLOYED WITH LANFOR6THFLT 1-71, ONE PLATOON WITH LANFORCARIB 1-71 AND ONE PLATOON WITH THE GTMO BN.
26. UNASSIGNED.
27. THIS UNIT IS BOTH ADCON/OPCON TO MAG-12, HOWEVER, IS PHYSICALLY LOCATED ON OKINAWA WITH THEIR STRENGTH CARRIED UNDER OKINAWA.
28. UNASSIGNED.
29. TWO OFF & 32 ENL DEPLOYED TO MOROCCO & 1 OFF & 10 ENL DEPLOYED TO GTMO ON A PERMANENT BASIS.
30. BLT 3/4 AT FUJI TRAINING (3D BN, 4TH MAR, AND BTRY I (REIN), 3D BN, 12TH MAR).

**SOURCE: MARES FORSTAT REPORT DATED 2 AUGUST 1971.

TAB 21-9

UNCLASSIFIED

Unclassified

UNCLASSIFIED

MARINE CORPS COMMAND CENTER

RECAPITULATION OF FMF ACTUAL STRENGTHS*

FMF

1 SEPTEMBER 1971

UNIT	GROUND		AIR		GRAND TOTAL	
	USMC	USN	USMC	USN	USMC	USN
FMF	62,372	2,428	36,657	623	99,029	3,051

PACIFIC

FMFPAC	38,792	1,607	21,979	412	60,771	2,019
MIDPAC	3,697	133	1,957	34	5,654	167
HQ, FMFPAC	997	35	63		1,060	35
1ST MARBDE	1,979	85	1,894	34	3,873	119
OTHER	721	13			721	13
WESTPAC (III MAF)	17,667	831	8,913	155	26,580	986
III MAF (OKINAWA)	17,667	831	3,059	31	20,726	862
HQ, III MAF	131				131	
3D MARDIV (-) (REIN)	14,431	780			14,431	780
1ST MAW			3,059	31	3,059	31
3D FSR	3,105	51			3,105	51
III MAF (JAPAN)			5,854	124	5,854	124
1ST MAW			5,854	124	5,854	124
(1) LANFOR 7TH FLT	2,780	138	353	3	3,133	141
31ST MAU	1,428	64	353	3	1,781	67
BLT 1/4	1,352	74			1,352	74
EASTPAC	17,428	643	11,109	223	28,537	866
HQ, I MAF	21				21	
1ST MARDIV (-) (REIN)	14,348	524			14,348	524
FORTRPS FMFPAC	1,495	75			1,495	75
3D MAW			11,109	223	11,109	223
1ST FSR	1,564	44			1,564	44

ATLANTIC

FMFLANT	23,580	821	14,678	211	38,258	1,032
EAST COAST	23,580	821	14,678	211	38,258	1,032
HQ, FMFLANT	726	4	80		806	4
2D MARDIV	15,562	644			15,562	644
FORTRPS FMFLANT	5,194	146			5,194	146
2D MAW			14,598	211	14,598	211
2D FSR	2,098	27			2,098	27
(2) CARIBBEAN	2,220	78			2,220	78
GTMO BN (-) (REIN)	947	30			947	30
LANFORCARIB 1-71	1,273	48			1,273	48
(2) MEDITERRANEAN	1,460	66	684	5	2,144	71
LANFOR6THFLT 1-71 (32D MAU)	1,460	66	238	3	1,698	69
DET A, VMCJ-2			143	1	143	1
VMFA-333			303	1	303	1

NOTES:
(1) STRENGTH INCLUDED IN III MAF OKINAWA.
(2) STRENGTH INCLUDED IN EAST COAST.

UNCLASSIFIED

Unclassified

* SOURCE: MARES FORSTAT REPORT DATED 2AUG71.

TAB 22

[redacted]

[redacted]

MARINE CORPS COMMAND CENTER

UNCLASSIFIED

FLEET MARINE FORCE DISPOSITION

1 SEPTEMBER 1971

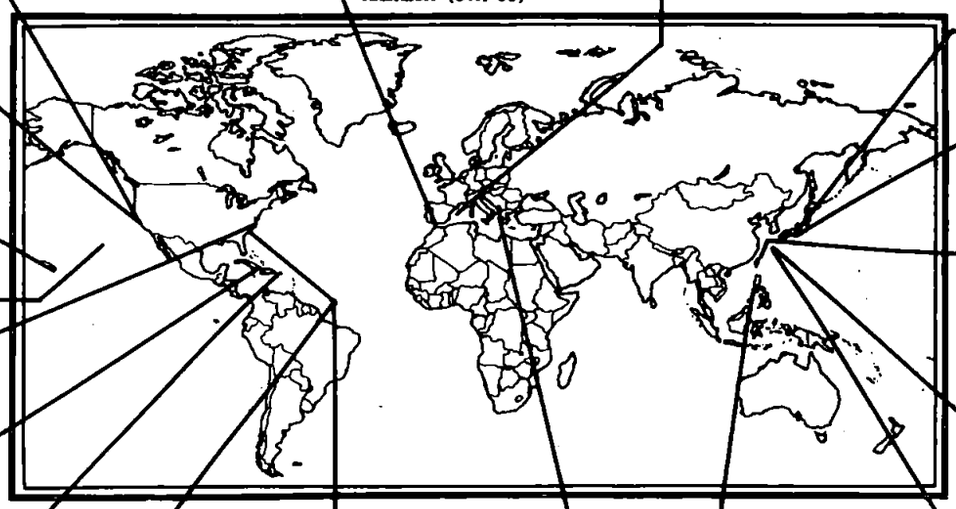

7TH MAB (2)
HQ, 7TH MAB
7TH MARINES
PROV MAG-50
AT CAMPEN

I MAF
1ST MARDIV (-)(REIN)
FORTRPS, FMFPAC
3D MAW

HQ, FMFPAC
1ST MARBDE
3D MAR (-)(REIN)
MAG-24

BLT 1/3 (2)
ENROUTE CAMPEN

HQ, FMFLANT
2D MARDIV (-)(REIN)
FORTRPS, FMFLANT
2D MAW

GTMO BN (REIN)
2D BN, 8TH MAR
BTRY B, 1/10
2 PLATS, 2D TANK BN
DET, FSR

VIEQUES TRAINING
DET, H&SCO, 2/2
CO F, 2/2
AT CAMP GARCIA, P.R.

8TH MAB (1)
HQ, 8TH MAB
BLT 1/2 (LANFOR6THFLT 2-71)
BLT 3/6
PROV MAG-40
AT CAMLEJ

(5) DET A, VMCJ-2 (4EA-6A A/C)
ABOARD USS SARATOGA (CVA-60)
AT ATHENS, GREECE
AIRCRAFT AT ROTA, SPAIN
PERSONNEL ABOARD THE USS AMERICA (CVA-66)

LANFORCARIB 1-71
BLT 1/6
AT CAMLEJ

LANFOR6THFLT 1-71 (4)
32D MAU
BLT 3/2
HMM-162
AT PALMA, MALLORCA, SPAIN

VMFA 333 (12/F-4J A/C) (3)
ABOARD USS AMERICA (CVA-66)
AT CORFU, GREECE

BLT 1/4 (7)
AT SUBIC BAY

JAPAN
1ST MAW

FUJI TRAINING
BLT 3/4

LANFOR7THFLT (6)
31ST MAU
BLT 2/9
HMM-164
AT TAIWAN

OKINAWA
III MAF
3D MARDIV (-)(REIN)
MAG-36

NAHA TRAINING
VMA(AW)-533
(16AUG-15OCT71)

DISTRIBUTION BY BATTALION/SQUADRON

	INF BNS	VMFA	VMA	VMA(AW)	VMCJ	VMO	VMGR	HMA	HML	HMM	HMH
WESTPAC	6	2	2	1	1	1	1		1	2	1
OKINAWA	(4)						(1)		(1)	(1)	(1)
JAPAN		(2)	(2)	(1)	(1)						
LANDING FORCE	(2)									(1)	
MIDPAC	2	3								1	1
HAWAII	(2)	(3)								(1)	(1)
EASTPAC	10	4	2	2	1	1	1		1	2	2
EL TORO/SANTA ANA		(4)	(2)	(2)	(1)		(1)			(2)	(2)
CAMPEN	(10)					(1)			(1)		
ATLANTIC	8	4	3	3	1	1	1	1	1	3	2
CAMP LEJEUNE	(6)										
CHERRY POINT		(1)		(3)	(1)		(1)				
BEAUFORT		(3)	(3)								
NEW RIVER						(1)		(1)	(1)	(2)	(2)
QUANTICO										(1)	
CARIBBEAN	(2)										
EUROPE	1									1	
MEDITERRANEAN	(1)									(1)	
GRAND TOTAL	27	13	7	6	3	3	3	1	3	9	6

Unclassified

UNCLASSIFIED

[redacted]

TAB 31-1

CO[redacted]

UNCLASSIFIED

MARINE CORPS COMMAND CENTER

1 SEPTEMBER 1971

FLEET MARINE FORCE MOVEMENTS

	UNIT	ETD/ATD	FROM	DESTINATION	ETA/ATA
	MOVEMENTS 26 AUGUST - 1 SEPTEMBER 1971				
(3)	VMFA-333	27AUG71	OPS CENTRAL MED	CORFU, GREECE	28AUG71
		1SEP71	CORFU, GREECE	OPS IONIAN SEA	2SEP71
(4)	LANFOR6THFLT 1-71 (32D MAU)	28AUG71	SOUDA BAY, CRETE	PALMA, MALLORCA, SPAIN	31AUG71
(8)	8TH MAR (-)(REIN)	29AUG71	29 PALMS, CALIFORNIA	CAMP LEJEUNE, NORTH CAROLINA	29AUG71
(7)	BLT 1/4	27AUG71	HONG KONG	ARGOPS SOUTH CHINA SEA	27AUG71
		30AUG71	ARGOPS SOUTH CHINA SEA	SUBIC BAY, R.P.I.	30AUG71
(9)	VMA(AW)-224 (-)	28AUG71	CHERRY POINT, NORTH CAROLINA	PENSACOLA, FLORIDA	28AUG71
		1SEP71	PENSACOLA, FLORIDA	CHERRY POINT, NORTH CAROLINA	1SEP71
(2)	BLT 1/3	28AUG71	KANEOHE, HAWAII	CAMP PENDLETON, CALIFORNIA	3SEP71
(10)	DET, 4TH MARINES	27AUG71	SANGLEY POINT, R.P.I.	CAMP HANSEN, OKINAWA	27AUG71
	PROJECTED MOVEMENTS 2 - 8 SEPTEMBER 1971				
	VMFA-333	6SEP71	OPS IONIAN SEA	SOUDA BAY, CRETE	7SEP71
(6)	LANFOR7THFLT (31ST MAU)	3SEP71	KEELUNG/KAOHSIUNG, TAIWAN	ARGOPS SOUTH CHINA SEA	3SEP71

NOTES:

(1) CG FMFLANT ACTIVATED THE 8TH MAB (HQ, 8TH MAB, BLT 1/2 (LANFORSIXTHFLT 2-71), BLT 3/6 AND PROV MAG-40) FOR PLANNING AND PARTICIPATION IN EXERCISE DEEP FURROW-71. EXERCISE DEEP FURROW-71 IS A JOINT AND COMBINED NATO EXERCISE TO BE CONDUCTED DURING THE PERIOD 9-20OCT71 TO INCLUDE AMPHIBIOUS LANDINGS IN TURKISH THRACE BY A COMBINED U.S. AND UNITED KINGDOM/ITALIAN LANDING FORCE. BGEN T. H. MILLER, JR., AWC 2D MAW, IS DESIGNATED AS CG 8TH MAB.

(2) CG I MAF ACTIVATED THE 7TH MAB (HQ, 7TH MAB, 7TH MARINES AND PROV MAG-50) FOR PLANNING ON 1JUL71 FOR PARTICIPATION IN ROPEVAL 3-71, A MAB SIZE AMPHIBIOUS EXERCISE TO BE CONDUCTED IN THE CAMP PENDLETON/CLEVELAND NATIONAL FOREST AREAS DURING THE PERIOD 8-17SEP71. LANDING FORCE OPERATIONS WILL BE DESIGNED TO TRAIN FORCES IN THE PLANNING AND EXECUTION OF AMPHIBIOUS OPERATIONS INVOLVING THE TECHNIQUE OF STAND-OFF AMPHIBIOUS ASSAULT AND ASPECTS OF THE SEA-BASING CONCEPT. BGEN P. G. GRAHAM, CG FORTRPS FMFPAC, IS DESIGNATED AS CG 7TH MAB. BLT 1/3, ENROUTE TO CAMP PENDLETON TO PARTICIPATE IN ROPEVAL 3-71, IS SCHEDULED TO CHOP TO CG 1ST MARDIV FOR SIMULTANEOUS CHOP TO CG 7TH MAB ON ARRIVAL AT WEST COAST PORT OF DEBARKATION. ETA 3SEP71.

(3) CONTINUING PORT VISIT AT CORFU, GREECE (28AUG-1SEP71). SCHEDULED FOR OPERATIONS IN THE IONIAN SEA (2-6SEP71) AND ANCHORAGE AT SOUDA BAY, CRETE (7-9SEP71).

(4) CONTINUING PORT VISIT AT PALMA, MALLORCA, SPAIN, DURING THE PERIOD 31AUG-7SEP71.

(5) DET A, VMCJ-2, IS TEMPORARILY SHORE-BASED AT ROTA, SPAIN, PENDING COMPLETION OF REPAIRS TO THE USS SARATOGA (CVA-60). THE USS SARATOGA IS SCHEDULED TO BE READY FOR SEA ON 7SEP71.

(6) SCHEDULED TO DEPART KEELUNG/KAOHSIUNG, TAIWAN, ON 3SEP71 FOR ARGOPS IN THE SOUTH CHINA SEA DURING THE PERIOD 3-8SEP71.

(7) CONDUCTING UPKEEP AT SUBIC BAY, R.P.I. (31AUG-8SEP71).

(8) CONDUCTED DESFEX 1-71 DURING THE PERIOD 16-28AUG71.

(9) VMA(AW)-224 (-) (w/10 A-6A A/C) CONDUCTED CARRIER QUALIFICATION TRAINING AT NAS PENSACOLA DURING THE PERIOD 28AUG-1SEP71.

(10) DET, 4TH MARINES, ASSIGNED AS SANGLEY AUGMENTATION FORCE, WAS RETURNED TO OKINAWA DUE TO THE OFFICIAL TURN-OVER OF USNS SANGLEY POINT TO THE REPUBLIC OF THE PHILIPPINES ON 31AUG71.

Unclassified

UNCLASSIFIED

TAB 31-2

[redacted]

[redacted] UNCLASSIFIED

MARINE CORPS COMMAND CENTER

FMF PACIFIC UNIT LOCATIONS AND STRENGTHS*
(MIDPAC/EASTPAC)

1 SEPTEMBER 1971

MIDPAC

FMFPAC

HQ, FMFPAC

1st MAR BDE

HQ, 1ST MAR BDE (KANEOHE)

3D MARINES (-)(REIN)
- 1/3 (ENROUTE CAMPEN)
- 2/3

MAG-24
- VMFA-122 (F-4B)
- VMFA-212 (F-4J)
- VMFA-235 (F-4J)
- HMM-262 (CH-46D)
- HMH-463 (CH-53D)
- DET, VMO-6(-) (OV-10A)
- DET, HML-367(-) (UH-1E)

MIDPAC STRENGTH RECAPITULATION	USMC	USN
HQ, FMFPAC	1,060	35
HQ, 1ST MAR BDE	253	28
3D MAR(-)(REIN)	1,025	57
SERVICE/SUPPORT UNITS	701	
MAG-24	1,894	34
OTHER	721	13
GRAND TOTAL MIDPAC	5,654	167

EASTPAC

I MAF

HQ, I MAF (CAMP PENDLETON)

1ST MAR DIV (-) (REIN)

1ST MARINES
- 1/1
- 2/1
- 3/1

5TH MARINES 3/3 (CADRE)
- 1/5
- 2/5
- 3/5

7TH MARINES
- 1/7 (CADRE)
- 2/7
- 3/7

FORTRPS FMFPAC

HQ, FORTRPS FMFPAC (29 PALMS)

3D MAW

HQ, 3D MAW (EL TORO)

MAG-11 (EL TORO)
- VMFA-314
- VMFA-323 (F-4B)
- VMFA-334
- VMFA-531 (F-4B)

MAG-13 (EL TORO)
- VMA-214 (A-4F)
- VMA-223 (A-4F)
- VMA(AW)-225
- VMA(AW)-242 (A-6A)
- VMCJ-3 (RF-4B/EA-6A)

MWSG-37 (EL TORO)
- VMGR-352 (KC-130F)

MHTG-30 (SANTA ANA)
- HMHT-301 (CH-53A)
- HMMT-302 (CH-46F)

MAG-16 (SANTA ANA)
- HMM-161 (CH-46D)
- HMM-163 (CH-46F)
- HMH-361 (CH-53A)
- HMH-363 (CH-53A)

MAG-16 ELEMENTS (CAMPEN)
- VMO-2
- HML-267 (OV-10A/UH-1E)

MCCRTG-10 (YUMA)
- VMFAT-101 (F-4B)
- VMAT-102 (A-4E)
- VMT-103 (TA-4F/J)

1ST FSR

	USMC	USN
HQ, I MAF	21	
1ST MAR DIV (-) (REIN)	14,348	524
HQ, FORTRPS FMFPAC	1,495	75
3D MAW	11,109	223
1ST FSR	1,564	44
GRAND TOTAL EASTPAC	28,537	866

*SOURCE: MARES FORSTAT REPORT DATED 2AUG71.

Unclassified

UNCLASSIFIED [redacted]

TAB 32

UNCLASSIFIED

MARINE CORPS COMMAND CENTER

FMF PACIFIC UNIT LOCATIONS AND STRENGTHS AND OSD CEILING CONSIDERATIONS (WESTPAC)

1 SEPTEMBER 1971

RVN

USMC TRANSITIONAL SUPPORT FORCE

NAVFORV	3
HQ STAFF MACV	49
JUSPAO	4
SAE	2
NAVADVGRU	76
SOG	12
DEF COM AGCY	5
SU #1, 1ST ANGLICO	175
EMBASSY SECURITY	156
CORDS	5
DET, H&HS-18	20
DOD SPEC REP	3
ROK LOG TEAM	13
CREDIT ACCOUNT	4
WESTPAC TRANS OFF	1
TOTAL - OSD PROGRAM XIV SPACE AUTHORIZATION	528

	USMC	USN
OSD PROGRAM XIV SPACE AUTHORIZATION	528	
SUB UNIT 1, 1ST ANGLICO	168	10
MACV STAFF/MACV FIELD	159	
NAVADVGRU/MACV UNITS	22	
OTHERS	170	
TOTAL RVN STRENGTH AS OF 26AUG71.	529	10

OKINAWA

III MAF (TF-79)

HQ, III MAF

3D MARDIV (-) (REIN) (TF-79.2)

HQ, 3D MARDIV (-)(REIN)
- 4TH MARINES
  - 1/4 (BLT)
  - 2/4
  - 3/4
- 9TH MARINES
  - 1/9
  - 2/9 (31ST MAU)
  - 3/9

1ST MAW

MAG-36

VMGR-152	(KC-130F)
VMO-6 (-)	(OV-10A)
HMH-462	(CH-53D)
HMM-164	(CH-46D/CH-53D/UH-1E)(31ST MAU)
HMM-165	(CH-46D)
HML-367	(UH-1E)

3D FSR

	USMC	USN
OSD PROGRAM XIV SPACE AUTHORIZATION	19,249	934
OKINAWA STRENGTH RECAPITULATION		
III MAF		
HQ, III MAF	131	
3D MARDIV (-)(REIN)	12,351	780
1ST MAW ELEMENTS	2,820	31
3D FSR	3,105	51
(1) III MAF TOTAL	18,407	862
OTHERS		
MCB CAMP BUTLER/NON FMF	1,251	25
HOSPITALIZED	0	
NON-DEPLOYABLE CASUALS	0	
OTHER TOTAL	1,251	25
GRAND TOTAL OKINAWA STRENGTH AS OF 19AUG71.	19,658	887

JAPAN

1ST MAW (TF-79.3)

HQ, 1ST MAW

MAG-12

VMA-211	(A-4E)
VMA-311	(A-4E)
VMA(AW)-533	(A-6A)

MAG-15

VMFA-115	(F-4B)
VMFA-232	(F-4J)
VMCJ-1	(EA-6A/RF-4B)

	USMC	USN
OSD PROGRAM XIV SPACE AUTHORIZATION	7,000	
JAPAN STRENGTH RECAPITULATION		
HQ, 1ST MAW	851	54
1ST MAW	4,953	70
(2) NON-FMF	897	
GRAND TOTAL JAPAN STRENGTH AS OF 19AUG71.	6,701	124

NOTES
(1) LESS ONE MAU.
(2) INCLUDES MCAS, IWAKUNI, MB YOKOSUKA, MB SASEBO AND CO "E" MAR SPT BN.

SOURCES: RVN STRENGTH: COMUSMACV WEEKLY STRENGTH REPORT MSG 280744ZAUG71.

OKI/JAPAN STRENGTH: FMFPAC WESTPAC STRENGTH VERIFICATION MSG 250319ZAUG71.

UNCLASSIFIED

Unclassified

TAB 33

[redacted]NCLASSIFIED

MARINE CORPS COMMAND CENTER

FMF ATLANTIC UNIT LOCATIONS AND STRENGTHS*

1 SEPTEMBER 1971

EAST COAST

		USMC	USN
FMFLANT	FMFLANT STRENGTH RECAPITULATION		
HQ, FMFLANT (NORFOLK)	HQ, FMFLANT	806	4
2D MARDIV			
HQ, 2D MARDIV (CAMLEJ)	2D MARDIV	15,562	644
2D MARINES			
1/2			
2/2			
3/2 (LANFOR6THFLT 1-71)(32D MAU)			
6TH MARINES			
1/6 (LANFORCARIB 1-71)			
2/6			
3/6			
8TH MARINES			
1/8			
2/8 (GTMC BN (-) (REIN))			
3/8			
FORTRPS FMFLANT			
HQ, FORTRPS (CAMLEJ)	FORTRPS	5,194	146
2D MAW			
HQ, 2D MAW (CHERRY POINT)	2D MAW	14,598	211
MAG-14 (CHERRY POINT)			
VMCJ-2	(RF-4F/EA-6A)		
VMA(AW)-121	(A-6A)		
VMA(AW)-224	(A-6A)		
VMFA-312	(F-4B)		
VMA(AW)-332	(A-6A)		
MWSG 27 (CHERRY POINT)			
VMGR-252	(KC-130F)		
MCRTG-20 (CHERRY POINT)			
VMFAT-201	(F-4B/J)		
VMAT(AW)-202	(A-6A/TC-4C)		
VMT-203	(TA-4F/J)		
MAG-31 (BEAUFORT)			
VMFA-251	(F-4B/J)		
VMFA-333	(F-4J)		
VMFA-451	(F-4J)		
MAG-32 (BEAUFORT)			
VMA-324	(A-4E/M)		
VMA-331	(A-4E)		
VMA-513	(AV-8A)		
MAG-26 (NEW RIVER)			
VMO-1	(OV-10A)		
HML-167	(UH-1E/N)		
HMM-162	(CH-46F/CH-53D/UH-1E)(LANFOR6THFLT 1-71)(32D MAU)		
HMM-261	(CH-46F)		
HMM-264	(CH-46F/CH-53D/AH-1J)		
HMM-263	(CH-46D/F) (QUANTICO)		
HMH-461	(CH-53A/D)		
HMH-362	(CH-53D)		
HMA-269	(UH-1E/N/AH-1J)		
MHTG-40 (NEW RIVER)			
HMHT-401	(CH-53D)		
HMMT-402	(CH-46F)		
2D FSR	2D FSR	2,098	27
	GRAND TOTAL FMFLANT	38,258	1,032

* SOURCE: MARES FORSTAT REPORT DATED 2AUG71.

TAB 35

S[redacted]
UNCLASSIFIED
Unclassified

[redacted]

UNCLASSIFIED

MARINE CORPS COMMAND CENTER

GUANTANAMO BAY BATTALION (-) (REIN) *

1 SEPTEMBER 1971

UNITS	STRENGTH**				ARMS & EQUIPMENT
	USMC		USN		
	OFF	ENL	OFF	ENL	
2D BN (REIN), 8TH MARINES					5 M-103 TANKS 7 M48 TANKS 2 M67 TANKS (FLAME) 8 106MM RR 8 81 MORTAR 6 155 HOW TD# 4 105 HOW TD# 6 106MM RR# 8 81 MORTAR#
LTCOL O. O. PAREDES					
2D BN, 8TH MARINES	29	678	3	19	
BTRY B, 1ST BN, 10TH MAR	6	132		3	
2D TANK BN (2 PLATS)	1	35			
DET, 2D FSR (LSU)		18			
PLAT, 2D ANGLICO	3	45	3		
DET, 2D DENTAL CO			1	1	
TOTALS	39	908	7	23	

*SEE TAB 31 FOR LOCATION.
**MARES FORSTAT OF 2AUG71.
#USN OWNED AND USMC OPERATED.

TAB 36-2

[redacted]

UNCLASSIFIED

Unclassified

UNC[redacted]

MARINE CORPS COMMAND CENTER

CHRONOLOGY OF SIGNIFICANT EVENTS

1 SEPTEMBER 1971

DATES	LOCATION	UNITS	REMARKS
15JUN71	FUTEMA, OKINAWA	MACS-8, MACG-18, 1ST MAW	MACS-8 DEACTIVATED 150530ZJUN71.
26JUN71	DANANG, RVN	FLC	FLC DEACTIVATED 260900ZJUN71.
27JUN71	DANANG, RVN	3D MAB	AT 270400ZJUN71 HQ 3D MAB WAS DEACTIVATED AND MAJGEN A. J. ARMSTRONG, CG 3D MAB, DEPARTED DANANG ENROUTE TO HQ FMFPAC, HAWAII. WITH THE DEACTIVATION OF HQ 3D MAB, ALL 13593 OSD SPACES SCHEDULED FOR REDEPLOYMENT/DEACTIVATION DURING INCREMENT VII (KEYSTONE ORIOLE (ALPHA)) HAVE EITHER REDEPLOYED FROM RVN OR HAVE BEEN DEACTIVATED, LEAVING A TRANSITIONAL SUPPORT FORCE OF 637 PROGRAM XIII OSD SPACES.
30JUN71	ATSUGI, JAPAN SANGLEY PT., R.P.I.	MB, ATSUGI MB, SANGLEY PT.	MB, ATSUGI, JAPAN, DEACTIVATED 30 JUNE 1971. MB, SANGLEY PT., R.P.I. DEACTIVATED 30 JUNE 1971
30JUN71	29 PALMS, CALIF.	CO A (REIN) & DET, HQCO, 11 TH ENGR BN, FORTRPS FMFPAC	CO A (REIN) AND DET, HQCO, 11TH ENGR BN DEACTIVATED 301600ZJUN71.
30JUN71	BEAUFORT, S.C.	MACS-9, MACG-28, 2DMAW	MACS-9 DEACTIVATED 30JUN71.
1JUL71	IWAKUNI, JAPAN CHERRY PT,N.C. EL TORO, CALIF GLENVIEW, ILL.	1ST MAW 2D MAW 3D MAW 4TH MAW	DEACTIVATIONS MWHG-1 AND MWFS-1, 1ST MAW MWHG-2 AND MWFS-2, 2D MAW MWHG-3 AND MWFS-3, 3D MAW MWHG-4 (GLENVIEW, ILLINOIS) AND MWFS-4 (GREEN BAY, WISC), 4TH MAW (USMCR) REDESIGNATIONS FROM — TO 1ST MAW H&HS-1 — MWHS-1 MWCS-1 — MWCS-18 2D MAW H&HS-2 — MWHS-2 MWCS-2 — MWCS-28 3D MAW H&HS-3 — MWHS-3 MWCS-3 — MWCS-38 4TH MAW (USMCR) H&HS-4 (DETROIT, MICH.) — MWHS-4 MWCS-4 (CHICAGO, ILL.) — MWCS-48
9JUL71	CAMPEN, CALIF	3D 8" HOW BTRY, 1ST MARDIV	3D 8" HOW BTRY DEACTIVATED 091500ZJUL71.
15JUL71	EL TORO, CALIF. CAMPEN, CALIF.	MAG-56, 3D MAW	DEACTIVATIONS MAG-56, 3D MAW H&MS-56, MAG-56, 3D MAW MABS-56, MAG-56, 3D MAW REDESIGNATIONS FROM — TO SU 1, H&MS-56, MAG-56 — SU 1, H&MS-16, MAG-16 MATCU-74, H&MS-56, MAG-56 — MATCU-74, H&MS-16, MAG-16 MATCU-75, H&MS-56, MAG-56 — MATCU-75, H&MS-16, MAG-16 HML-267, MAG-56 — HML-267, MAG-16 VMO-2, MAG-56 — VMO-2, MAG-16 HMM-161, MAG-56 — HMM-161, MAG-16 HMM-163, MAG-56 — HMM-163, MAG-16 HMH-361, MAG-56 — HMH-361, MAG-16 HMH-363, MAG-56 — HMH-363, MAG-16
19JUL71	RVN	3D MAB	AT 191630ZJUL71, WITH THE ARRIVAL OF THE FINAL 3D MAB ELEMENTS OF INCREMENT VII (KEYSTONE ORIOLE (ALPHA)) ABOARD THE USS ST. LOUIS (LKA-116) AT LONG BEACH, CALIFORNIA, REDEPLOYMENT OF ALL MAJOR USMC UNITS FROM RVN HAS BEEN COMPLETED.
13AUG71	CAMPEN	1ST MP BN, 1ST MARDIV	1ST MP BN DEACTIVATED 131500ZAUG71.
1SEP71	29 PALMS, CALIF. KANEOHE, HAWAII	21ST DENTAL CO (-) DET 1, 21ST DENTAL CO (=)	EFFECTIVE-011001ZSEP71, THE 21ST DENTAL CO-(=), FORTRPS FMFPAC, IS REDESIGNATED DET 1, 21ST DENTAL CO (-) AND AT THE SAME TIME DET 1, 21ST DENTAL CO-(-), 1ST MARBDE, IS REDESIGNATED THE 21ST DENTAL CO (-).

UNCLASSIFIED

Unclassified

C[redacted]

TAB 41-5

UNCLASSIFIED

Department of Defense

NUMBER OF CASUALTIES INCURRED BY U. S. MILITARY PERSONNEL
IN CONNECTION WITH THE CONFLICT IN VIET-NAM

Cumulative from January 1, 1961 through August 21, 1971

1 SEPTEMBER 1971

	Army	Navy *	Marine Corps	Air Force	Total
A. CASUALTIES RESULTING FROM ACTIONS BY HOSTILE FORCES					
1. Killed	25,121	1,050	11,465	455	38,091
2. Wounded or Injured					
a. Died of wounds	3,491	140	1,449	44	5,124
b. Nonfatal wounds					
Hospital care required	95,947	4,083	51,356	807	152,193
Hospital care not required	103,875	5,835	37,161	2,295	149,166
3. Missing					
a. Died while missing	1,636	182	5	395	2,218
b. Returned to control	48	7	6	26	87
c. Current missing	259	113	81	558	1,011
4. Captured or Interned					
a. Died while captured or interned	15	-	3	1	19
b. Returned to control	56	3	5	6	70
c. Current captured or interned	62	144	23	236	465
5. Deaths					
a. From aircraft accidents/incidents					
Fixed Wing	89	155	139	695	1,078
Helicopter	2,218	62	429	59	2,768
b. From ground action	27,956	1,155	12,354	141	41,606
TOTAL DEATHS a/	30,263	1,372	12,922	895	45,452
B. CASUALTIES NOT THE RESULT OF ACTIONS BY HOSTILE FORCES					
6. Current Missing	130	-	12	-	142
7. Deaths					
a. From aircraft accidents/incidents					
Fixed Wing	250	172	45	279	746
Helicopter	1,701	52	242	18	2,013
b. From other causes	4,719	608	1,391	261	6,979
TOTAL DEATHS	6,670	832	1,678	558	9,738

a/ Sum of lines 1, 2a, 3a and 4a.

*Navy figures include a small number of Coast Guard casualties.

Department of Defense
OASD (Comptroller)
Directorate for Information Operations
August 25, 1971

TAB 45-2

UNCLASSIFIED

Unclassified

COMPARATIVE USMC/ENEMY KIA

1 SEPTEMBER 1971

1969

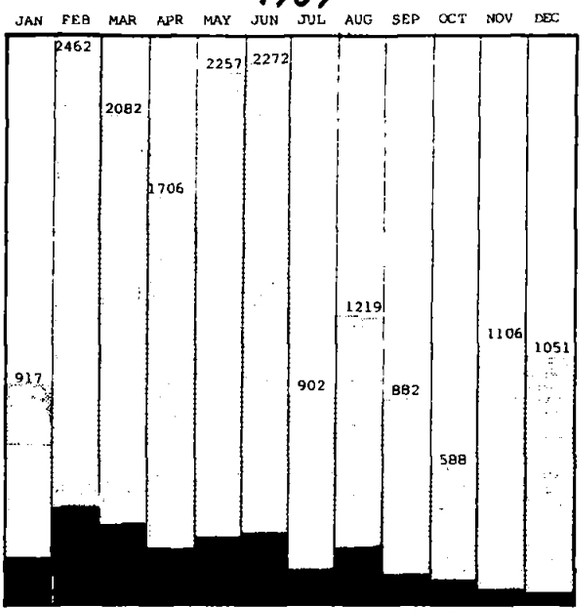

1969 USMC	1969 ENEMY		1970 USMC	1970 ENEMY
181	917	JAN	59	1027
411	2462	FEB	91	898
323	2082	MAR	62	491
204	1706	APR	53	732
241	2257	MAY	42	780
257	2272	JUN	61	693
126	902	JUL	32	524
209	1219	AUG	41	313
112	882	SEP	31	191
73	588	OCT	20	169
69	1106	NOV	30	156
48	1051	DEC	11	198
2,254	17,444		533	6,172

1971

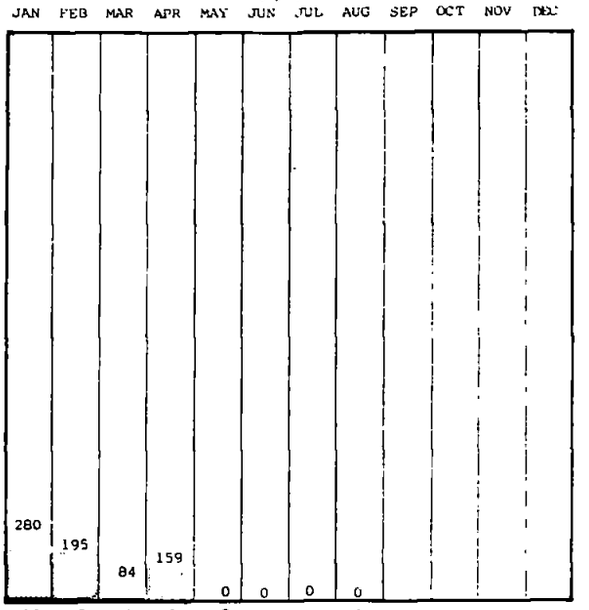

1971 USMC	1971 ENEMY	
18	280	JAN
9	195	FEB
7	84	MAR
3	159	APR
0	0	MAY
1	0	JUN
0	0	JUL
0	0	AUG
		SEP
		OCT
		NOV
		DEC

1970

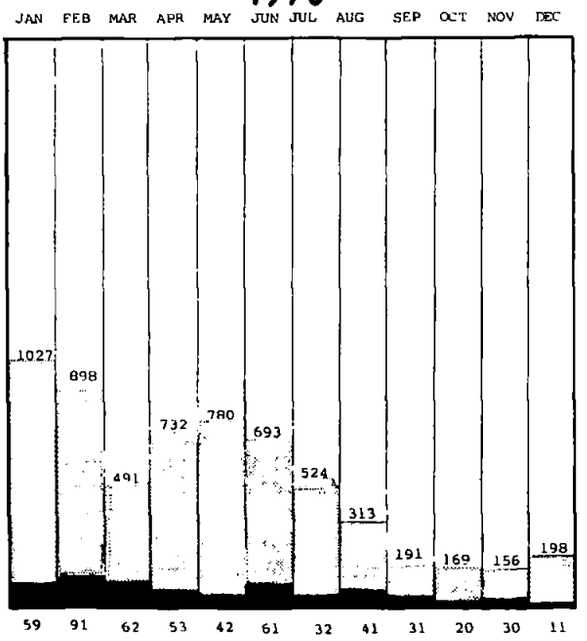

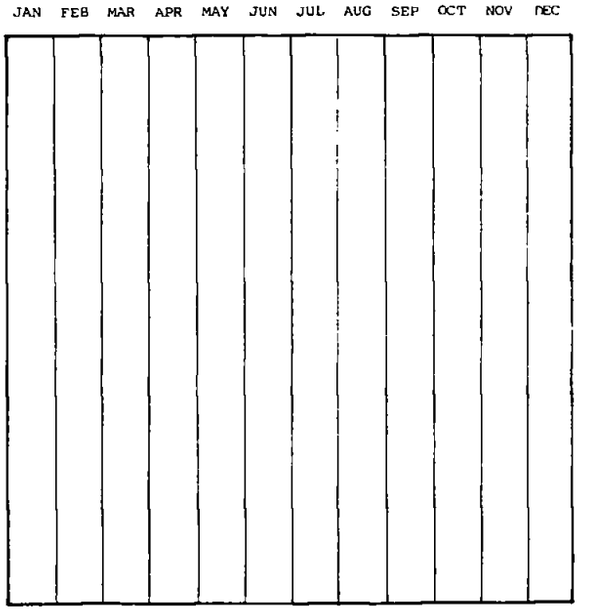

Unclassified

UNCLASSIFIED

MARINE CORPS COMMAND CENTER

1 SEPTEMBER 1971

DISPOSITION AND STRENGTH OF MAJOR US AND FW FORCES IN RVN

DISPOSITION

MR RECAP

	MR I*	XXIV CORPS
	220 MILES LENGTH@	30-75 MILES WIDTH
	14,600 SQ MI AREA	2,860,300 CIV POP
		101ST ABN DIV (AM)
USA	19 BNs	23D INF DIV (AMERICAL)
ARVN	36 BNs	2D ROKMC BDE
ROKMC	4 BNs	147TH VNMC BDE
VNMC	6 BNs	258TH VNMC BDE
ARVN CAV	4 BNs	1ST ARVN DIV
		2D ARVN DIV
	TOTAL 69 BNs	
	MR II*	SRAG (NHA TRANG)
	315 MILES LENGTH@	45-130 MILES WIDTH
	31,300 SQ MI AREA	2,898,200 CIV POP
USA	3 BNs	173D ABN BDE
ARVN	32 BNs	ROK CAP INF DIV
ROK	18 BNs	9TH ROK DIV
ARVN CAV	3	22D ARVN DIV
	TOTAL 56 BNs	23D ARVN DIV
	MR III*	TRAC (LONG BINH)
	90 MILES LENGTH@	55-115 MILES WIDTH
	10,100 SQ MI AREA	5,133,000 CIV POP
USA	5 BNs	2D BDE, 25TH INF DIV
ARVN	54 BNs	1ST AUSTRALIAN TF
AUSTRALIA	2 BNs	ROYAL THAI VOL REGT
THAILAND	3 BNs	1ST CAV DIV (AM)
ARVN CAV	5 BNs	5TH ARVN DIV
VNMC	3 BNs	18TH ARVN DIV
		25TH ARVN DIV
	TOTAL 72 BNs	369TH VNMC BDE
		1ST ARVN ABN DIV
	MR IV*	DRAC (CAN THO)
	195 MILES LENGTH@	35-115 MILES WIDTH
	14,600 SQ MI AREA	5,700,1000 CIV POP
ARVN	41 BNs	7TH ARVN DIV
ARVN CAV	5 BNs	9TH ARVN DIV
		21ST ARVN DIV
	TOTAL 46 BNs	

@ Coastal Arc

* See RVN Recap note

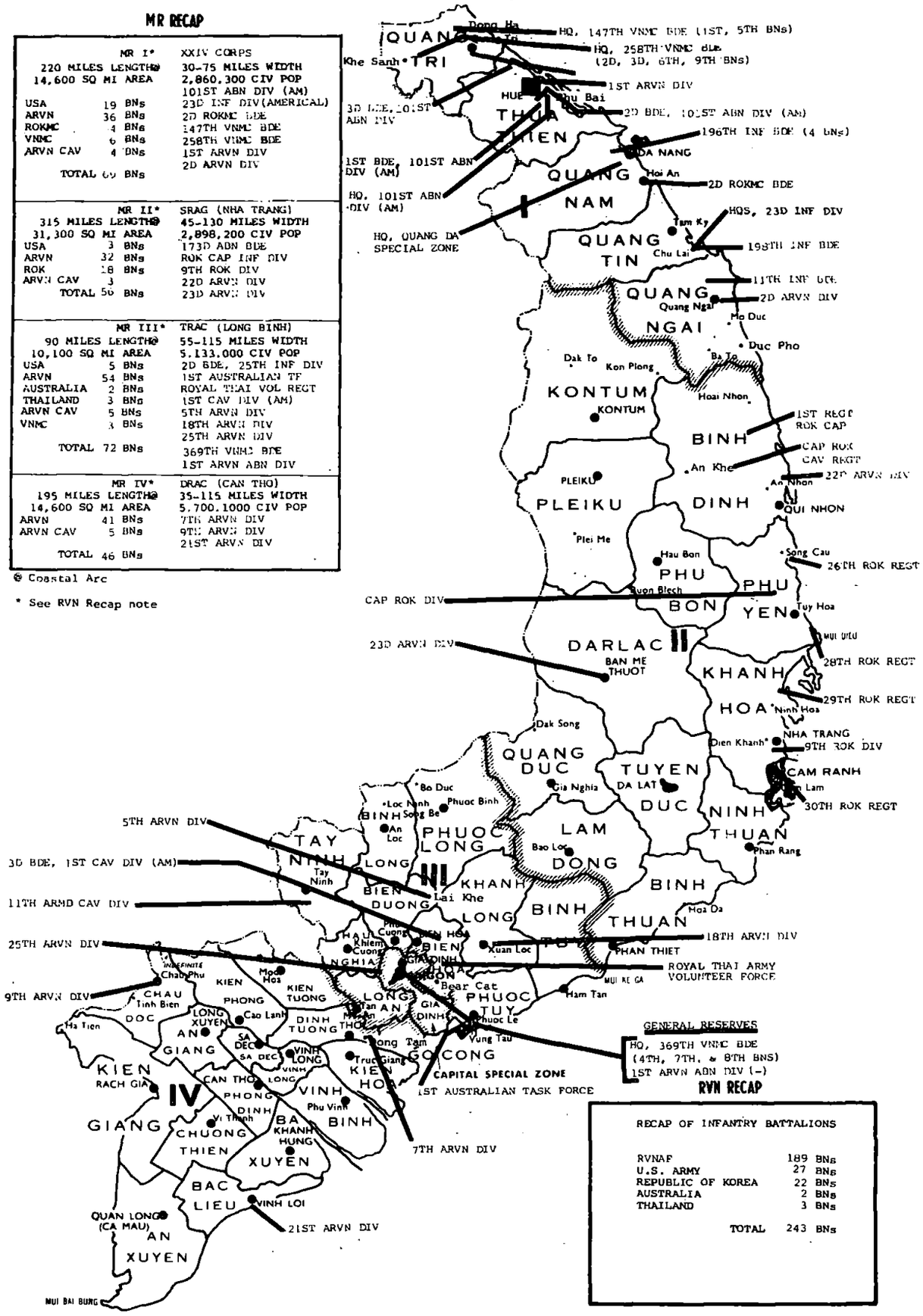

RVN RECAP

RECAP OF INFANTRY BATTALIONS	
RVNAF	189 BNs
U.S. ARMY	27 BNs
REPUBLIC OF KOREA	22 BNs
AUSTRALIA	2 BNs
THAILAND	3 BNs
TOTAL	243 BNs

TAB 46-1

UNCLASSIFIED
Unclassified

[redacted]

UNCLASSIFIED

MARINE CORPS COMMAND CENTER

STRENGTHS*

1 SEPTEMBER 1971

RVN ARMED FORCES (RVNAF)

ARMY (ARVN)	412,705
NAVY (VNN)	41,184
AIR FORCE (VNAF)	50,245
MARINE CORPS (VNMC)	13,806
REGIONAL FORCES (RF)	295,019
POPULAR FORCES (PF)	247,638
TOTAL RVNAF	1,060,597

UNITED STATES FORCES

ARMY	172,590
NAVY	9,971
AIR FORCE	35,813
MARINE CORPS	529
COAST GUARD	102
TOTAL U.S.	219,005

FREE WORLD MILITARY ASSISTANCE FORCES (FWMAF)

REPUBLIC OF KOREA	48,455
AUSTRALIA	6,068
PHILIPPINES	81
THAILAND	6,362
NEW ZEALAND	267
REPUBLIC OF CHINA	31
SPAIN	7
TOTAL FWMAF	61,271

TOTAL FORCES IN RVN	1,340,873

★ SOURCE: RVNAF - MACV MONTHLY RPT OF GVN STRENGTH AS OF 31MAY71
ALL OTHERS - MACV WEEKLY STRENGTH RPT AS OF 2400, 26AUG71.

Unclassified

UNCLASSIFIED

[redacted]

TAB 46-2

UNCLASSIFIED
[redacted]

MARINE CORPS COMMAND CENTER

1 SEPTEMBER 1971

PRINCIPAL MARINE OFFICERS COMUSMACV STAFF, HQ USMACV

DEP ASST C/S, J-3	BGEN WILLIAM H. LANAGAN JR.
DIRECTOR, COMBINED INTELLIGENCE CENTER, VIETNAM, J-2	COL WILLIAM WENTWORTH
CHIEF, RESEARCH AND ANALYSIS DIVISION	COL VICTOR A. KLEBER, JR.
CHIEF, PLANS/REQUIREMENTS DIVISION, J-44	COL JAMES P. KELLEY
SENIOR MARINE ADVISOR, NAG	COL JOSHUA W. DORSEY III
CHIEF, COMMAND CENTER	COL CLIFFORD F. QUILICI

TAB 47

[redacted]

UNCLASSIFIED
Unclassified

UNCLASSIFIED
[redacted]

MARINE CORPS COMMAND CENTER

TABLE OF CONTENTS

8 SEPTEMBER 1971

	LIST OF EFFECTIVE TABS	DATE OF LATEST CHANGE
SECTION I - MARINE CORPS FORCES - WORLD WIDE		
ALLOCATION OF MARINE CORPS PERSONNEL	11	8SEP71●
SELECTED PERSONNEL AND AIRCRAFT DATA	12	8SEP71●
UNITED STATES MARINE CORPS RESERVE	13-1	30DEC70
	13-2	23DEC70
	13-3	4AUG71
	13-4	23DEC70
MISCELLANEOUS NON-FMF UNITS	14-1	8SEP71●
(MARINE BARRACKS)	14-2	30JUN71
(MARINE SECURITY GUARD BATTALION)	14-3	14APR71
(MARINE DETACHMENTS AFLOAT)	14-4	14APR71
	14-5	30JUN71
SECTION II - STATUS OF FLEET MARINE FORCES		
STATUS OF FMF UNITS	21-1	8SEP71●
	21-2	1SEP71
	21-3	8SEP71●
	21-4	8SEP71●
	21-5	11AUG71
	21-6	1SEP71
	21-7	1SEP71
	21-8	1SEP71
	21-9	8SEP71●
RECAPITULATION OF FMF ACTUAL STRENGTHS	22	1SEP71
DISTRIBUTION OF MAJOR GROUND EQUIPMENT AND AIRCRAFT	23	1SEP71
SECTION III - DISPOSITION OF FLEET MARINE FORCE UNITS		
FLEET MARINE FORCE DISPOSITION, DISTRIBUTION BY BATTALION/ SQUADRON AND MOVEMENTS	31-1	8SEP71●
	31-2	8SEP71●
FMF PACIFIC UNIT LOCATIONS AND STRENGTHS (MIDPAC/EASTPAC)	32	8SEP71●
FMF PACIFIC UNIT LOCATIONS, STRENGTHS AND OSD CEILING CONSIDERATIONS (WESTPAC)	33	8SEP71●
LANDING FORCES - 7TH FLEET	34	25AUG71
FMF ATLANTIC UNIT LOCATIONS AND STRENGTHS	35	1SEP71
LANDING FORCES - MEDITERRANEAN AND CARIBBEAN	36-1	11AUG71
GUANTANAMO BAY BATTALION	36-2	1SEP71
SECTION IV - GENERAL		
CHRONOLOGY OF SIGNIFICANT EVENTS	41-1	17MAR71
	41-2	21APR71
	41-3	23JUN71
	41-4	16JUN71
	41-5	1SEP71
USMC/ENEMY CASUALTIES IN RVN; CUMULATIVE DOD CASUALTY FIGURES ON U.S. MILITARY PERSONNEL AND COMPARATIVE USMC/ENEMY KIA IN CONNECTION WITH THE CONFLICT IN RVN	45-1	28JUL71
	45-2	8SEP71●
	45-3	26MAY71
	45-4	1SEP71
DISPOSITION AND STRENGTH OF MAJOR U.S. AND FW FORCES IN RVN	46-1	8SEP71●
	46-2	8SEP71●
COMUSMACV STAFF, PRINCIPAL MARINE OFFICERS HQ MACV	47	1SEP71
REPUBLIC OF KOREA MARINE CORPS	48-1	25AUG71
REPUBLIC OF VIETNAM MARINE CORPS	48-2	7JUL71
VIETNAM GEOGRAPHIC AND CLIMATE DATA	49-1	18NOV70
	49-2	18NOV70
CHRONOLOGY OF FMF DEPLOYMENT AND STRENGTH IN RVN	410-1	20JAN71
	410-2	25NOV70
	410-3	25NOV70
	410-4	25NOV70
	410-5	25NOV70
	410-6	25NOV70
	410-7	9DEC70
	410-8	10MAR71
	410-9	19MAY71
	410-10	23JUN71
	410-11	21JUL71
	410-12	21JUL71

CONTENTS OF THIS PUBLICATION
DOWNGRADED AT 3 YEAR INTERVALS
DECLASSIFIED AFTER 12 YEARS
DOD DIR 5200.10

UNCLASSIFIED
Unclassified
[redacted]

MARINE CORPS
SEP 10 1971
REFERENCE BRANCH

Unclassified

UNCLASSIFIED

MARINE CORPS COMMAND CENTER

ALLOCATION OF MARINE CORPS PERSONNEL

AS OF 30 JUNE 1971

8 SEPTEMBER 1971

	TOTAL		GROUND		AVIATION		GRAND TOTAL	PERCENT
	OFF	# ENL	OFF	# ENL	** OFF	#** ENL		
OPERATING FORCE								
FLEET MARINE FORCE TOTAL	9,446	92,224	4,625	59,832	4,821	32,392	101,670	47.87
SECURITY FORCES								
NAVY DEPARTMENT	492	8,629	492	8,629			9,121	4.30
STATE DEPARTMENT	15	895	15	895			910	.43
FT MEADE, MARYLAND	16	351	16	351			367	.17
SPECIAL ACTIVITIES	52	617	52	617			669	.32
SECURITY FORCE TOTAL	575	10,492	575	10,492			11,067	5.21
MARINES AFLOAT	187	1,805	166	1,769	21	36	1,992	.94
OPERATING FORCE TOTAL	10,208	104,521	5,366	72,093	4,842	32,428	114,729	54.02
TRAINING BASE								
RECRUITS		13,842		13,842			13,842	6.52
STUDENTS								
INDIVIDUAL CBT TRAINEES	2	4,185	2	4,185			4,187	1.97
STAGING BATTALION	2	1,388	2	1,380		8	1,390	.65
BST/AVN TRAINEES	331	3,584	2	1,948	329	1,636	3,915	1.84
OTHER	2,095	7,505	1,214	4,202	881	3,303	9,600	4.52
STUDENTS TOTAL	2,430	16,662	1,220	11,715	1,210	4,947	19,092	8.99
OVERHEAD								
RECRUIT TRAINING	422	4,146	422	4,145		1	4,568	2.15
STUDENT TRAINING	1,831	11,398	1,385	9,778	446	1,620	13,229	6.23
OVERHEAD TOTAL	2,253	15,544	1,807	13,923	446	1,621	17,797	8.38
RESERVE TRAINING PROGRAM	703	4,818	488	2,186	215	2,632	5,521	2.60
TRAINING BASE TOTAL	5,386	50,866	3,515	41,666	1,871	9,200	56,252	26.50
SUPPORTING BASE								
SUPPLY ESTABLISHMENT	368	2,379	368	2,379			2,747	1.29
BASE SERVICE AND ADMIN.	2,837	15,670	2,069	10,826	768	4,844	18,507	8.72
JOINT AND LIAISON	597	349	454	238	143	111	946	.45
SUPPORTING BASE TOTAL	3,802	18,398	2,891	13,443	911	4,955	22,200	10.46
TRANSIENTS, PATIENTS & PRISONERS								
NON-MOVING TRANSIENTS	133	2,695	93	2,447	40	248	2,828	1.33
TRANSIENTS	1,969	12,675	1,516	9,849	453	2,826	14,644	6.90
PATIENTS	37	582	26	509	11	73	619	.29
HOSPITALIZED CASUALTIES	24	408	20	354	4	54	432	.20
PRISONERS	3	292	2	240	1	52	295	.14
CAPTURED OR MISSING	66	50	5	44	61	6	116	.06
TRANS, PATIENTS & PRISONERS TOTAL	2,232	16,702	1,662	13,443	570	3,259	18,934	8.92
UNKNOWNS	137	117	137	97		20	254	.10
MARINE CORPS TOTAL	*21,765	190,604	13,571	140,742	8,194	49,862	*212,369	100.00%

EXCLUDES 6 MONTH A/D TRAINEES

** INCLUDES AVN PERS. PERFORMING DUTY WITH GROUND FUNCTIONS

	OFF	ENL
FMF	1,055	73
RCTG	152	166
TOTAL	1,207	239

* INCLUDES 66 RESERVE OFFICERS ON TEMPORARY ACTIVE DUTY.

TAB 11

UNCLASSIFIED

Unclassified

[redacted]

MARINE CORPS COMMAND CENTER

UNCLASSIFIED

SELECTED PERSONNEL AND AIRCRAFT DATA

PERSONNEL

8 SEPTEMBER 1971

		STRENGTH	PERCENT USMC	PERCENT FMF	PERCENT FMFPAC
USMC TOTAL	*	211,301	100.00		
FLEET MARINE FORCES		99,029	46.85	100.00	
FMF ATLANTIC	#	38,258	18.11	38.63	
FMF PACIFIC	#	60,771	28.74	61.37	
VIETNAM	¢	531	00.25		

SOURCE: * HQMC 1080-20 (ESTIMATED PERSONNEL DATA) AS OF 31JUL71.
MARES FORSTAT REPORT DATED 2AUG71.
¢ MACV WEEKLY STRENGTH REPORT AS OF 2SEP71.

AIRCRAFT

11 AUGUST 1971

		FIXW	HELO	TOTAL	PERCENT USMC	PERCENT FMF	PERCENT FMFPAC
USMC TOTALS	**	771	607	1,378	100.00		
FLEET MARINE FORCES	●	695	566	1,261	91.51	100.00	
FMF ATLANTIC	●	324	275	599	43.47	47.50	
FMF PACIFIC	●	371	291	662	48.04	52.50	

SOURCE: ** DC/S AIR STATUS BOARD PHOTO AS OF 10AUG71.
● MARES FORSTAT REPORT DATED 2AUG71.

UNCLASSIFIED

TAB 12

Unclassified [redacted]

[redacted] UNCLASSIFIED

MARINE CORPS COMMAND CENTER

MISCELLANEOUS NON-FMF UNITS
MARINE BARRACKS

8 SEPTEMBER 1971

MAP SYMBOL	MARINE BARRACKS	COMMANDING OFFICER	T/O	O/H
EAST COAST				
B-1	MB, NS, ANNAPOLIS, MARYLAND	MAJOR R. C. WATSON	68	75
B-2	MB, NB, BOSTON, MASSACHUSETTS	COL E. H. MACKEL	80	91
B-3	MB, NB, BROOKLYN, NEW YORK	LTCOL G. C. COOK	123	131
B-4	MB, NAS, BRUNSWICK, MAINE	MAJOR C. H. CIUBA	84	85
B-5	MB, NB, CHARLESTON, S. C.	LTCOL A. J. SPENCE	138	146
B-6	MB, NWS, CHARLESTON, S. C.	MAJOR A. E. LEE	200	192
B-7	MB, FORT MEADE, MARYLAND	COL R. J. SCHENING	365	357
B-8	MB, NAD, EARLE, NEW JERSEY (COLTS NECK)	MAJOR C. L. RUSHING	165	173
B-9	MB, NTC, GREAT LAKES, ILLINOIS	COL J. R. WAYERSKI	173	189
B-10	MB, NAS, JACKSONVILLE, FLORIDA	MAJOR J. E. LAVIN	141	159
B-11	MB, NB, KEY WEST, FLORIDA	MAJOR S. A. JOHNSON	136	138
B-12	MB, NAS, LAKEHURST, NEW JERSEY	MAJOR C. A. AUSTIN	71	74
B-13	MB, NSB, GROTON, NEW LONDON, CONN.	CAPT J. R. KOPKA	62	61
B-14	MB, NB, NEWPORT, RHODE ISLAND	MAJOR D. R. SPARKS	121	126
B-15	MB, NB, NORFOLK, VIRGINIA	COL B. W. ALFORD	365	376
B-16	MB, NAS, PATUXENT RIVER, MARYLAND	CAPT J. J. MULHOLLAND	84	86
B-17	MB, NB, PHILADELPHIA, PENNSYLVANIA	COL R. A. HEYWOOD	192	217
B-18	MB, NSY, PORTSMOUTH, NEW HAMPSHIRE	CAPT R. M. MALLARD	68	80
B-19	MB, NSY, PORTSMOUTH, VIRGINIA	MAJOR C. M. ISBELL	115	133
B-20	MB, NAS, QUONSET POINT, RHODE ISLAND	MAJOR P. F. LESSARD	88	92
B-21	MB, 8TH & I STs S. E., WASHINGTON, D. C.	COL D. M. TWOMEY	604	707
B-22	MB, NWS, YORKTOWN, VIRGINIA	LTCOL G. W. RYHANYCH	232	230
B-23	CINCLANTFLT, NB, NORFOLK, VIRGINIA	MAJOR C. R. ARIOLA	108	105
B-24	MB, NDC, PORTSMOUTH, NEW HAMPSHIRE	LTCOL E. J. ROCKFORD	231	251
B-25	MB, NAS, CECIL FIELD, FLORIDA	MAJOR D. A. POWELL	96	95
WEST COAST				
B-26	MB, NAS, ALAMEDA, CALIFORNIA	MAJOR L. R. WILLIAMS	97	110
B-27	MB, BREMERTON, WASHINGTON	LTCOL C. M. DANIELS	103	105
B-28	MB, NWS, CONCORD, CALIFORNIA	LTCOL J. M. DEAN	202	234
B-29	MB, NWS, FALLBROOK, CALIFORNIA	MAJOR B. T. CHRISTLIEH	86	91
B-30	MB, NAD, HAWTHORNE, NEVADA	MAJOR J. L. BARKER	114	122
B-31	MB, NB, LONG BEACH, CALIFORNIA	MAJOR J. W. HEMINGWAY	136	155
B-32	MB, NAD, MC ALESTER, OKLAHOMA	MAJOR W. H. BARNARD	92	109
B-33	MB, NAS, MOFFET FIELD, CALIFORNIA	CAPT H. W. COURTER	97	108
B-34	MB, NAS, NORIS, SAN DIEGO, CALIFORNIA	MAJOR W. J. DONOVAN, JR.	78	84
B-35	MB, NAS, WHIDBEY ISLAND, OAK HARBOR, WASH.	CAPT R. G. HERMS	79	73
B-36	MB, NS, SAN DIEGO, CALIFORNIA	COL R. W. TELLER	246	250
B-37	MB, NSY, HUNTER POINT, SAN FRANCISCO, CALIF.	MAJOR J. A. HARING	61	63
B-38	MB, NS, TI, SAN FRANCISCO, CALIFORNIA	COL T. E. MULVIHILL	291	304
B-39	MB, NWS, SEAL BEACH, CALIFORNIA	MAJOR D. L. PARKER	101	117
B-40	MB, NTS, VALLEJO, CALIFORNIA	MAJOR G. L. PETERSON	107	109
B-41	MB, NTS, KEYPORT, WASHINGTON	MAJOR B. G. HUNTER	120	123
B-42	MB, NAS, LEMOORE, CALIFORNIA	CAPT M. A. GURROLA	57	70
OVERSEAS				
B-43	MB, KENITRA, MOROCCO	LTCOL L. N. ANGELO	157	168
B-44	MB, NB, GUANTANAMO, CUBA	COL T. J. HOLT	228	243
B-45	MB, NAVACT, ROTA, SPAIN	MAJOR P. L. LEFEVRE	113	123
B-46	MB, FIFTEENTH NAVDIST, RODMAN, CANAL ZONE	LTCOL F. W. ST. CLAIR	111	124
B-47	MB, NS, BERMUDA	MAJOR W. R. HUF	118	107
B-48	MD, NAVACT, LONDON, ENGLAND	CAPT D. J. ROBINSON	47	60
B-49	MB, NAVSPTACT, NAPLES, ITALY	CAPT M. R. JANAY	91	92
B-50	MB, SAN JUAN, PUERTO, RICO	LTCOL D. C. BINNEY	110	113
B-51	MB, NS, ROOSEVELT ROADS, PUERTO RICO	CAPT E. J. LLOYD	89	87
B-52	MB, NF, ICELAND	MAJOR R. J. WEIDNER	121	129
B-53	MB, NS, ADAK, ALASKA	CAPT M. W. WYDO	81	102
B-54	MB, NS, KODIAK, ALASKA	MAJOR R. B. MASON	56	77
B-55	MB, NB, GUAM	COL W. G. TIMME	272	285
B-56	MB, NAD, OAHU, HAWAII	LTCOL B. J. READY	251	275
B-57	MB, NB, SUBIC BAY, R.P.I.	COL J. H. KEITH	466	543
B-58	MB, NAS, BARBERS POINT, OAHU, HAWAII	CAPT R. G. OURNSTED	86	89
B-59	MB, PEARL HARBOR, OAHU, HAWAII	COL W. F. FRY	389	412
B-60	MB, NAF, NAHA, OKINAWA	MAJOR V. D. SUTTON	48	51
B-61	UNASSIGNED			
B-62	UNASSIGNED			
B-63	MB, FLTACT, SASEBO, JAPAN	MAJOR F. E. COIT	81	103
B-64	MB, FLTACT, YOKOSUKA, JAPAN	LTCOL D. H. STRAIN	157	154
B-65	WHITE HOUSE WEST, CAMP PENDLETON, CALIFORNIA		67	80
B-66	WHITE HOUSE WEST, EL TORO, CALIFORNIA		163	174
B-67	HMX-1 PRESIDENTS SECURITY		148	207

UNCLASSIFIED

Unclassified

[redacted]

TAB 14-1

UNCLASSIFIED

MARINE CORPS COMMAND CENTER

STATUS OF FMF UNITS **

8 SEPTEMBER 1971

UNIT *	NOTE	UNIT COMMANDER	LOCATION	STRENGTH USMC	STRENGTH USN	UNIT READINESS ☆ CURRENT RATE	RSN	P	S	R	T	EXPECTED RATE	EXPECTED BY	MAJOR EQUIPMENT
FMF				99029	3051									
MIDPAC				5654	167									
FMFPAC		LTGEN N. K. JONES	HAWAII	60771	2019	C1		1	1	1	1			
HQ FMFPAC				1060	35									
HQSBN		COL R. G. TAUFFER	CP SMITH	997	27	C1		1	1	1	1			
DET 2, 21ST DENTAL CO (-)		CAPT M. R. HAMILTON (USN)			8	C1		1	1	1	1			
HQ SUDN		LTCOL C. E. DORFFELD	KANEOHE	63		C4	P	4	1	1	1	C4	710731	5/T-28B, 2/UH-34D, 1/US-2D, 1/VH-34D
1ST ANGLICO (-)		MAJ H. S. MORGAN JR.	SDIEGO	153	3	C3	S	2	3	2	3	C2	710831	
SU 1, 1ST ANGLICO (MACV)	*	LTCOL D. GRAY	SAIGON	168	10	C1		1	1	1	1			
1ST RADIO BN		LTCOL J. K. HYATT JR.	KANEOHE	400		C1		1	1	1	1			
1ST MARINE BRIGADE		BGEN V. A. ARMSTRONG	KANEOHE	3873	119	C4	P	4	2	2	3	C3	711031	
H&S CO		CAPT H. J. TRAUTWEIN JR.		242	15	C1		1	1	1	1			
1ST ITT		1STLT R. R. SCOTT		11		C1		1	1	1	1			
11TH CIT (CADRE) (FMFPAC)	*	CAPT K. W. CLEM				C4	N	5	5	5	5			
21ST DENTAL CO (-)		CDR J. D. CRAWFORD (USN)			13	C1		1	1	1	1			
3D MARINES (-) (REIN)		LTCOL J. P. CONNOLLY II	KANEOHE			C4	P	4	1	1	4	C3	711031	
HQCO (-)		CAPT E. P. MUSSETT JR.		66		C4	P	4	1	1	4	C3	711031	
1ST BN	23	MAJ P. J. KIESELBACH	CAMPEN	807	53	C3	P	3	1	1	3	C2	711031	6/105 HOW TD, 8/106MM RR, 8/81 MORT
2D BN		MAJ F. W. BEEKMAN	KANEOHE	4		C4	N	5	3	2	5	C3	711031	8/106MM RR, 8/81 MORT
CO A, 3D ENGR BN (-)		CAPT T. M. COOK		93		C3	P	3	2	2	2	C2	711031	
CO A (REIN), 3D MT BN (-)		1STLT R. S. DOLGERT		19		C4	P	4	1	1	4	C3	711031	
CO A (REIN), 3D SP BN (-) (CADRE)		CAPT R. F. BAKER		26		C4	P	4	1	1	4	C3	711031	
CO A, 3D RECON BN (-) (REIN) (CADRE)		CAPT P. M. KATANA		10		C4	P	4	1	1	4	C3	711031	
CO A (REIN), 3D MED BN (-) (CADRE)					4	C4	P	4	1	1	4	C3	711031	
1ST BN (-), 12TH MAR		MAJ R. J. COOGAN	KANEOHE	101		C4	P	4	1	1	4	C3	711031	18/105 HOW TD
CO D, 3D AMTRAC BN (-)		CAPT K. R. BURNS		138		C4	P	4	1	2	4	C3	711001	3/LVTP-5 COMD, 44/LVTP-5, 1/LVTR
COMM SPT CO, 7TH COMM BN (-)		MAJ R. T. HIMMERICH		242		C3	R	3	2	3	2	C2	711230	
PROV SERV BN		LTCOL J. W. BROWN		220		C4	P	4	4	3	4	C3	711231	
MAG-24		COL R. E. CAREY	KANEOHE	1894	34	C3	X	4	2	3	4	C3	710915	
H&MS-24		LTCOL C. L. PHILLIPS		508		C4	S	2	4	4	2	C3	710901	1/C-117D, 5/CH-46A, 2/TA-4F
MABS-24		LTCOL W. R. LEDBETTER		338	34	C4	P	4	2	2	2	C3	710915	
MATCU-70		WO O. F. GOUR JR.		40		C4	P	4	2	1	4	C3	710801	
VMFA-122		LTCOL L. FURSTENBERG		170		C4	P	4	4	4	4	C3	711101	7/F-4B
VMFA-212		LTCOL R. D. REVIE		212		C3	X	4	1	3	3	C2	710704	13/F-4J
VMFA-235		MAJ G. H. LEACH		215		C3	X	4	1	1	4	C2	711231	16/F-4J
MACS-2		LTCOL P. L. ELLIOTT		168		C4	P	4	1	2	3	C3	711101	
HMM-262		MAJ C. M. LIVELY		130		C4	N	5	1	2	5			30/CH-46D
HMM-463		MAJ M. E. EDWARDS		113		C4	P	4	1	4	4	C3	711101	15/CH-53D
DET, VMO-6 (-)						C4	P	4	4	4	4	C3	711231	3/OV-10A
DET, HML-367 (-)						C4	P	4	1	1	4	C3	711231	8/UH-1E
WESTPAC				26580	986									
FMFPAC														
III MAF		LTGEN D. J. ROBERTSON	CP COURTNEY	26580	986									
H&SCO				131		C1		1	1	1	1			
3D MARDIV(-)(REIN) (III MAF)	*	MAJGEN L. METZGER	CP COURTNEY	14431	780	C2	T	1	1	1	2	C2	720601	
HQBN		COL H.A.F.VONDERHEYDE		1683	46	C2	T	1	1	2	2	C2	720601	
3D ITT	22	WO T. F. SINGLEY	CP HANSEN											
7TH ITT	22	CAPT E. R. SIBLEY												
11TH ITT	22	1STLT M. C. MONAHAN												
15TH ITT	22	WO J. W. STANLEY												
17TH ITT	22	CAPT G. H. JOHNSON JR.												
SCAMP	22													
3D CIT		CAPT R. E. SIMOYER		14		C1		1	1	1	1			
1ST SSCT		CAPT T. L. STROHECKER	CP COURTNEY	11		C3	S	1	3	1	1	C1	710801	
3D DENTAL CO		CAPT W. J. KENNEDY (USN)		4	66	C1		1	1	1	1			

Unclassified

*PARENTHETIC UNIT INDICATES OPCON WHEN DIFFERENT FROM ORGANIZATIONAL STRUCTURE.

TAB 21-1

UNCLASSIFIED

[redacted] UNCLASSIFIED

MARINE CORPS COMMAND CENTER

STATUS OF FMF UNITS **

8 SEPTEMBER 1971

UNIT *	NOTE	UNIT COMMANDER	LOCATION	STRENGTH USMC	STRENGTH USN	UNIT READINESS ☆ CURRENT RATE	RSN	P	S	R	T	EXPECTED RATE	BY	MAJOR EQUIPMENT
MAG-15		COL R. R. MILLER	IWAKUNI			C2	T	2	2	2	2	C1	710915	
H&MS-15		MAJ M. P. CADY		554		C2	R	1	1	2	1	C1	711001	4/TA-4F
MABS-15		MAJ R. L. BECKWITH		368	21	C2	R	2	1	2	2	C2	710731	
MATCU-60 (MAG-15)	*	CAPT D. L. HENDRIX		56		C2	P	2	1	1	2	C1	710801	
VMFA-115		LTCOL R. R. POWELL	CUBI PT.	289	1	C2	T	2	2	2	2	C2	711001	14/F-4B
VMFA-232		LTCOL J. L. GREGORCYK	IWAKUNI	318	1	C2	T	2	1	2	2	C1	710815	16/F-4J
VMCJ-1 (1ST MAW)	*	LTCOL S. S. EISENHAUER		341	1	C3	X	2	1	2	4	C2	711006	6/EA-6A, 9/RF-4B
MWSG-17		COL W. G. MCCOOL	IWAKUNI			C3	R	1	2	3	2	C2	710801	
H&MS-17		LTCOL W. R. LIMBACH		568	7	C3	R	1	2	3	2	C2	710901	4/C-117D, 3/C-54Q/R/S
WERS-17 (-)		MAJ A. L. FRUCCI		224		C2	R	1	2	2	2	C1	710815	
OKINAWA (1ST MAW ELEMENTS)				3059	31									
MAG-36		COL R. J. ZITNIK	FUTEMA			C2	R	1	2	2	1	C2	710924	
H&MS-36 (-)		LTCOL D. A. SPURLOCK		576		C2	S	1	2	2	1	C1	710901	9/CH-46D, 6/UH-1E
SU 1, H&MS-36 (-)		MAJ F. W. CRONE		51		C2	R	1	1	2	1	C1	710911	4/AH-1J
MABS-36		LTCOL V. J. GUINEE JR.		521	24	C2	R	2	1	2	2	C1	710830	
MATCU-66 (MAG-36)	*	CAPT K. H. CLARK		56		C2	P	2	1	2	2	C2	710925	
MATCU-68 (MAG-36)	*	WO L. R. COXE		16		C4	P	4	2	2	4	C4	711015	
HMM-164 (31ST MAU)	2*	LTCOL A. J. KETTERING	31ST MAU	285	3	C2	R	1	2	2	1	C1	710815	13/CH-46D, 4/CH-53D, 4/UH-1E
HMM-165		LTCOL P. L. MOREAU	FUTEMA	254		C2	R	1	2	2	1	C1	710810	20/CH-46D
HMH-462 (-)	2	LTCOL D. G. MCDONALD		262	1	C2	R	1	1	2	1	C1	710901	17/CH-53D
VMO-6 (-)		LTCOL J. L. NORTON		206		C2	R	1	2	2	1	C1	710901	11/OV-10A
VMGR-152 (1ST MAW)	*	LTCOL R. W. DUPHINEY		291	1	C4	R	2	4	4	3	C3	710831	6/KC-130F
HML-367 (-)		MAJ R. SANCHO		167		C1		1	1	1	1			12/UH-1E
OTHERS														
DET, MASS-2 (-)			FUTEMA											
SU 1, WERS-17 (-)	12	WO E. Q. HICKS		51		C1		1	1	1	1			
SU 1, H&MS-12 (-)	27	CAPT R. D. PITTS	NAHA	49		C2	S	1	2	2	1	C1	710730	
MACS-4		LTCOL R. D. MILLER	FUTEMA	272	2	C3	T	2	1	2	3	C2	710923	
3D FSR		COL R. E. ROEDER JR.	CP FOSTER	3105	51	C3	S	2	3	3	2	C2	710915	
H&S BN		LTCOL J. B. HARRIS SR.		890	25	C3	R	2	3	3	2	C2	710915	
SUPPLY BN		LTCOL J. W. FRIBERG		1212	26	C3	S	2	3	2	2	C2	710915	
NOP, 3D FSR (3D FSR)	*	CAPT C. W. SHIVER		45		C1		1	1	1	1			
MAINT BN		LTCOL H. J. FREY		958		C3	S	2	3	3	2	C2	710915	2/LVTE-1, 1/106MM RR, 1/81 MORT
EASTPAC				28537	866									
FMFPAC														
I MAF		MAJGEN R. T. DWYER JR.	CAMPEN	21		C3	X	2	4	4	2	C2	710901	
1ST MAR DIV (-) (REIN)		MAJGEN R. T. DWYER JR.	CAMPEN	14348	524	C4	P	4	2	3	4	C4	711001	
HQBN		COL R. N. BURHANS		1780	60	C4	P	4	2	2	4	C4	711001	3/81 MORT
1ST CIT		CAPT B. B. VORONIN		20		C1		1	1	1	1			
5TH ITT	14	CAPT R. A. KAROLY				C3	P	3	1	1	3	C3	710901	
9TH ITT	14	CAPT L. J. JANSEN				C1		1	1	1	1			
19TH ITT	14	1STLT G. D. JENNINGS				C4	P	4	1	1	4	C4	711101	
21ST ITT	14	2DLT M. M. LINCOLN				C4	P	4	1	1	4	C3	711001	
23D ITT	14	CAPT R. D. TOMLIN				C1		1	1	1	1			
25TH ITT	14	CAPT H. K. LEE				C4	P	4	1	1	4	C4	711001	
2D SSCT		WO E. L. HANEY		8		C4	R	1	1	4	1	C3	710901	
SCAMP		CAPT A. L. SELLECK JR.		24										
COMM SPT CO, 9TH COMM BN (-)		MAJ R. R. ANDERSON		299		C2	R	1	1	2	1	C2	711001	
1ST CIVIL AFFAIRS GRP (CADRE)		CAPT R. S. GRISCHKOWSKY		23		C4	P	4	1	1	4	C4	711001	
1ST MARINES		LTCOL E. J. BONARS				C4	S	3	4	4	3	C3	711001	
HQCO		CAPT V. L. SCHULTZ		186	10	C3	S	2	3	3	2	C2	711101	
1ST BN		LTCOL C. A. BARSTOW		1258	10	C4	R	3	3	4	3	C3	711001	8/106MM RR, 8/81 MORT
2D BN	23	LTCOL A. LUKEMAN		1055	17	C4	S	2	4	3	2	C3	711001	8/106MM RR, 8/81 MORT
3D BN		LTCOL M. HUNTER		1048	27	C3	S	3	3	3	3	C2	711001	8/106MM RR, 8/81 MORT

Unclassified

* PARENTHETIC UNIT INDICATES OPCON WHEN DIFFERENT FROM ORGANIZATIONAL STRUCTURE.

TAB 21-3

[redacted] UNCLASSIFIED

S[redacted]

UNCLASSIFIED

MARINE CORPS COMMAND CENTER

STATUS OF FMF UNITS**

8 SEPTEMBER 1971

UNIT *	NOTE	UNIT COMMANDER	LOCATION	STRENGTH USMC	STRENGTH USN	UNIT READINESS☆ CURRENT RATE	RSN	P	S	R	T	EXPECTED RATE	BY	MAJOR EQUIPMENT
3D BN, 3D MARINES (CADRE)		MAJ F. G. HUTCHINSON JR.	CAMPEN	112	2	C4	N	5	4	4	5			7/106MM RR
5TH MARINES		LTCOL M. J. HOCHENAUER	CAMPEN			C4	P	4	4	4	4	C4	711001	
HQCO		CAPT J. R. WILLIAMS		88	10	C4	P	4	4	3	4	C4	711001	
1ST BN		MAJ W. T. MACY		132	6	C4	P	4	4	4	4	C4	711001	1/106MM RR, 6/81 MORT
2D BN		MAJ J. A. LINNEMANN		198	4	C4	P	4	4	4	4	C4	711001	
3D BN		CAPT M. B. DARLING		139	7	C4	P	4	4	4	4	C4	711001	8/106MM RR
7TH MARINES	23	COL A. A. MONTI	CAMPEN			C3	P	3	1	2	3	C3	711001	
HQCO	23	1STLT P. E. MILLER		221	12	C2	S	1	2	2	1	C1	711001	
1ST BN (CADRE)		MAJ R. C. HALL		409	7	C4	N	5	3	3	5			8/106MM RR, 8/81 MORT
2D BN	23	LTCOL T. L. SULLIVAN		1136	44	C2	T	1-	1	1	2	C1	711101	8/106MM RR, 7/81 MORT
3D BN	23/13	LTCOL R. J. MILLE		1104	41	C2	T	1	1	1	2	C1	710901	8/106MM RR, 8/81 MORT
11TH MARINES (-) (REIN)		COL W. R. GRUBAUGH	CAMPEN			C4	P	4	3	4	4	C4	711001	
HQ BTRY		1STLT W. T. WILLIAMS		163		C4	P	4	4	4	4	C4	711001	6/M-30 MORT
1ST BN		LTCOL R. J. HENLEY		627	1	C4	P	4	2	4	4	C4	711001	18/105 HOW TD
2D BN (CADRE)		MAJ L. E. KOLEBER		217	2	C4	P	4	4	4	4	C4	711001	
3D BN	23	MAJ W. A. HALL		657	18	C2	T	1	1	1	2	C1	711001	18/105 HOW TD
1ST MT BN (REIN)		CAPT E. R. WHITING		306	5	C3	R	1	2	3	2	C2	711001	
CO B, 9TH MT BN (-)		CAPT R. F. WILLIAMS		77	1	C3	X	4	1	1	4	C2	710901	
1ST RECON BN		CAPT R. E. MILLER		267	5	C4	P	4	2	3	4	C4	711001	
1ST FORCE RECON CO		CAPT D. L. COOK		71	3	C4	P	4	2	3	4	C4	711001	
1ST TANK BN (REIN)	18	LTCOL H. G. EDEBOHLS		417	21	C4	P	4	2	2	4	C4	711001	5/M-51 VTR, 7/M-67 TANK, 15/M103 TANK, 25/M48 TANK
CO D, 3D TANK BN (-) (CADRE)														
1ST ENGR BN		MAJ J. T. SCHULTZ		480	6	C4	P	4	4	4	4	C4	711001	
7TH ENGR BN (-) (REIN)	11	MAJ C. N. WALL		382	14	C4	P	4	2	3	4	C4	711001	
1ST BRIDGE CO (-) (CADRE)		1STLT D. N. TAYLOR JR.		52		C4	P	4	1	4	4	C4	711001	
1ST SP BN	8	MAJ F. L. EDWARDS JR.		247	17	C4	P	4	1	2	4	C4	711001	
3D AMTRAC BN (-)	19	MAJ J. P. SENIK		368	17	C4	P	4	2	2	4	C4	711001	5/LVTE-1, 8/LVTP-5 COMD, 70/LVTP-5, 3/LVTR
1ST SERV BN (REIN)	10	COL G. K. REID		732	33	C4	P	4	1	2	4	C4	711001	
1ST SEARCHLIGHT BTRY (CADRE)								5	5	5	5			
7TH SEP BULK FUEL CO (CADRE)								5	5	5	5			
1ST MED BN		LCDR C. A. ROPER (USN)		44	82	C4	P	4	3	4	4	C4	711001	
1ST DENTAL CO		CAPT J. F. KING (USN)		3	42	C4	P	4	1	1	4	C4	711001	
FORCE TROOPS FMFPAC		BGEN P. G. GRAHAM	29 PALMS	1495	75	C4	X	4	2	3	3			
HQCO		MAJ E. L. ROTTSOLK		173	9	C1		1	1	1	1			
NOP, 1ST FSR		CAPT T. R. GERIES		49		C1		1	1	1	1			
9TH COMM BN (-)		LTCOL D. J. GARRET		376	12	C4	P	4	1	2	3	C3	710901	
13TH CIT (FORTRPS FMFPAC)	*	CAPT A. G. WILSON		16		C1		1	1	1	1			
DET 1, 21ST DENTAL CO (-)		CAPT G. W. WALTER (USN)		2	21	C4	S	1	4	4	1	C3	711001	
1ST FAG		LTCOL R. O. GILLICK	29 PALMS	19		C4	P	4	2	3	4	C3	710802	
HQ BTRY, 1ST FAG		1STLT G. R. MABRY		132	13	C2	T	1	1	2	2	C1	710802	
1ST 8" HOW BTRY SP (-)		CAPT J. P. FARRELL		136		C3	P	3	2	2	3	C3	710915	1/M-51 VTR, 4/8" HOW SP
1ST 175MM GUN BTRY SP		CAPT M. T. OWENS JR.		65		C4	P	4	1	3	4	C3	710802	1/M-51 VTR, 6/175 GUN SP
3D 175MM GUN BTRY SP		CAPT D. L. ROSENBERG		94		C4	P	4	3	4	4	C3	710802	1/M-51 VTR, 6/175 GUN SP
4TH BN, 11TH MAR (1ST FAG)	*	LTCOL D. W. SANFORD		304	2	C4	P	4	2	3	4	C3	710915	1/M-51 VTR, 18/155 HOW SP
CO A (REIN), 7TH ENGR BN(-)		CAPT P. A. PANKEY	29 PALMS	107		C4	P	4	1	2	3	C3	710802	
3D HOSPITAL CO (CADRE)		LT W. L. NICHOLS (USN)		22	18	C4	X	4	4	3	4			

*PARENTHETIC UNIT INDICATES OPCON WHEN DIFFERENT FROM ORGANIZATIONAL STRUCTURE.

TAB 21-4

Unclassified

UNCLASSIFIED [redacted]

[redacted]

MARINE CORPS COMMAND CENTER

STATUS OF FMF UNITS**

8 SEPTEMBER 1971

UNIT	NOTE	UNIT COMMANDER	LOCATION	STRENGTH		UNIT READINESS☆								MAJOR EQUIPMENT
						CURRENT						EXPECTED		
				USMC	USN	RATE	RSN	P	S	R	T	RATE	BY	

☆ UNIT READINESS RATING CATEGORY

C-1 FULLY COMBAT READY
C-2 SUBSTANTIALLY COMBAT READY
C-3 MARGINALLY COMBAT READY
C-4 NOT COMBAT READY

☆ READINESS ABBREVIATIONS

P PERSONNEL READINESS
S SUPPLIES/EQUIPMENT ON HAND
R EQUIPMENT READINESS
T TRAINING READINESS
X COMMANDERS SUBJECTIVE JUDGEMENT
N RESOURCE ALLOCATION BY COGNIZANT SERVICE DOES NOT PERMIT A HIGHER C-RATING

NOTES

1. BLT 1/4 BREAKDOWN ON TAB 34.
2. 31ST MAU BREAKDOWN ON TAB 34.
3. ABOARD USS AMERICA (CVA-66).
4. ASSIGNED III MAF
5. LANFOR6THFLT 1-71 (32D MAU) BREAKDOWN ON TAB 36.
6. LANFORCARIB 1-71 BREAKDOWN ON TAB 36.
7. VMA(AW)-533 (W/10 A-6A AIRCRAFT) AT NAMA, OKINAWA, FOR TRAINING DURING THE PERIOD 16AUG-15OCT71.
8. H&SCO, CO B, 1ST SP BN IN CADRE STATUS.
9. GTMO BN (REIN) BREAKDOWN ON TAB 36-2.
10. TRUCK CO, 1ST SERV BN (CADRE).
11. CO C, 7TH ENGR BN (CADRE).
12. THIS UNIT IS BOTH ADCON/OPCON TO WERS-17 (-).
13. AIR ALERT BATTALION.
14. PERSONNEL AND EQUIPMENT CARRIED IN HQBN, 1ST MARDIV.
15. VIEQUES TRNG (DET, H&SCO, CO F, 2/2).
16. ABOARD USS SARATOGA (CVA-60).
17. INCLUDES STRENGTH CO D, 7TH ENGR BN AND 1ST PLAT, 1ST BRIDGE CO.
18. H&SCO, CO B, CO C, AND CO D, 1ST TANK BN (CADRE).
19. H&SCO, CO B, AND CO C, 3D AMTRAC BN (CADRE).
20. PERSONNEL AND EQUIPMENT CARRIED IN HQBN, 2D MARDIV.
21. ONE PLATOON IS DEPLOYED WITH LANFOR6THFLT 1-71 AND ALSO ONE PLATOON WTIH LANFORCARIB 1-71.
22. PERSONNEL AND EQUIPMENT CARRIED IN HQBN, 3D MARDIV.
23. PARTICIPATING IN ROPEVAL 3-71 AT CAMPEN DURING THE PERIOD 8-17SEP71. OPCON TO 7TH MAB.
24. UNASSIGNED.
25. ONE PLATOON IS DEPLOYED WITH LANFOR6THFLT 1-71, ONE PLATOON WITH LANFORCARIB 1-71 AND ONE PLATOON WITH THE GTMO BN.
26. UNASSIGNED.
27. THIS UNIT IS BOTH ADCON/OPCON TO MAG-12, HOWEVER, IS PHYSICALLY LOCATED ON OKINAWA WITH THEIR STRENGTH CARRIED UNDER OKINAWA.
28. UNASSIGNED.
29. TWO OFF & 32 ENL DEPLOYED TO MOROCCO & 1 OFF & 10 ENL DEPLOYED TO GTMO ON A PERMANENT BASIS.
30. BLT 3/4 (3D BN, 4TH MAR, AND BTRY I (REIN), 3D BN, 12TH MAR) AT FUJI FOR TRAINING DURING THE PERIOD 18AUG-10CT71.

** SOURCE: MARES FORSTAT REPORT DATED 2 AUGUST 1971.

UNCLASSIFIED

Unclassified [redacted]

TAB 21-9

[redacted]

MARINE CORPS COMMAND CENTER

UNCLASSIFIED

FLEET MARINE FORCE DISPOSITION

8 SEPTEMBER 1971

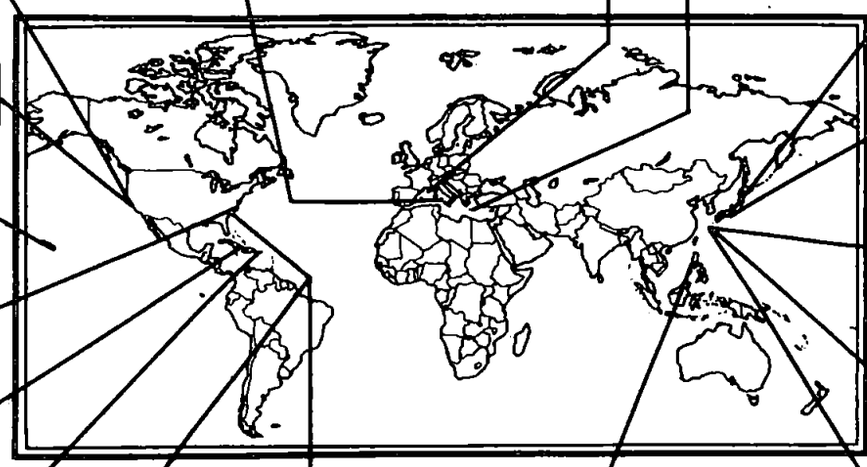

7TH MAB (2)
HQ, 7TH MAB
7TH MARINES
BLT 1/3
PROV MAG-50
AT CAMPEN

I MAF
1ST MARDIV (-)(REIN)
FORTRPS, FMFPAC
3D MAW

HQ, FMFPAC
1ST MARBDE
3D MAR (-)(REIN)
MAG-24

HQ, FMFLANT
2D MARDIV (-)(REIN)
FORTRPS, FMFLANT
2D MAW

GTMO BN (REIN)
2D BN, 8TH MAR
BTRY B, 1/10
2 PLATS, 2D TANK BN
DET, FSR

VIEQUES TRAINING
DET, H&SCO, 2/2
CO F, 2/2
AT CAMP GARCIA, P.R.

8TH MAB (1)
HQ, 8TH MAB
BLT 1/2 (LANFOR6THFLT 2-71)
BLT 3/6
PROV MAG-40
AT CAMLEJ

DET A, VMCJ-2 (4/EA-6A A/C) (5)
ABOARD USS SARATOGA (CVA-60)
OPS TYRRHENIAN SEA/WESTERN MED

LANFORCARIB 1-71
BLT 1/6
AT CAMLEJ

LANFOR6THFLT 1-71 (4)
32D MAU
BLT 3/2
HMM-162
ENROUTE LIVORNO, ITALY

VMFA-333 (12/F-4J A/C) (3)
ABOARD USS AMERICA (CVA-66)
AT SOUDA BAY, CRETE

LANFOR7THFLT (6)
31ST MAU
BLT 2/9
HMM-164
AT SUBIC BAY, R.P.I.

JAPAN
1ST MAW

FUJI TRAINING
BLT 3/4
(18AUG-10CT71)

BLT 1/4 (7)
AT OKINAWA
(STAND-DOWN STATUS)

OKINAWA
III MAF
3D MARDIV (-)(REIN)
MAG-36

NAHA TRAINING
VMA(AW)-533
(16AUG-15OCT71)

DISTRIBUTION BY BATTALION/SQUADRON

	INF BNS	VMFA	VMA	VMA(AW)	VMCJ	VMO	VMGR	HMA	HML	HMM	HMH
WESTPAC	6	2	2	1	1	1	1		1	2	1
OKINAWA	(4)	(2)	(2)	(1)	(1)		(1)		(1)	(1)	(1)
JAPAN										(1)	
LANDING FORCE	(2)										
MIDPAC	2	3								1	1
HAWAII	(2)	(3)								(1)	(1)
EASTPAC	10	4	2	2	1	1	1		1	2	2
EL TORO/SANTA ANA		(4)	(2)	(2)	(1)	(1)	(1)		(1)	(2)	(2)
CAMPEN	(10)										
ATLANTIC	8	4	3	3	1	1	1	1	1	3	2
CAMP LEJEUNE	(6)										
CHERRY POINT		(1)		(3)	(1)		(1)				
BEAUFORT		(3)	(3)			(1)		(1)	(1)	(2)	(2)
NEW RIVER										(1)	
QUANTICO											
CARIBBEAN	(2)										
EUROPE	1									1	
MEDITERRANEAN	(1)									(1)	
GRAND TOTAL	27	13	7	6	3	3	3	1	3	9	6

TAB 31-1

Unclassified [redacted]

UNCLASSIFIED

[redacted]

MARINE CORPS COMMAND CENTER

8 SEPTEMBER 1971

UNCLASSIFIED

FLEET MARINE FORCE MOVEMENTS

	UNIT	ETD/ATD	FROM	DESTINATION	ETA/ATA
	MOVEMENTS 1 - 8 SEPTEMBER 1971				
(3)	VMFA-333	1SEP71	CORFU, GREECE	OPS IONIAN SEA	2SEP71
		6SEP71	OPS IONIAN SEA	SOUDA BAY, CRETE	7SEP71
(2)	BLT 1/3	28AUG71	KANEOHE, HAWAII	CAMP PENDLETON, CALIFORNIA	3SEP71
(6)	LANFOR7THFLT	2SEP71	KEELUNG/KAOHSIUNG, TAIWAN	ARGOPS SOUTH CHINA SEA	3SEP71
	(31ST MAU)	6SEP71	ARGOPS SOUTH CHINA SEA	SUBIC BAY, R.P.I.	7SEP71
(4)	LANFOR6THFLT 1-71 (32D MAU)	3SEP71	PALMA, MALLORCA, SPAIN	LIVORNO, ITALY	11SEP71
(7)	BLT 1/4	4SEP71	SUBIC BAY, R.P.I.	OKINAWA	6SEP71
(5)	DET A, VMCJ-2	6SEP71	ATHENS, GREECE	OPS TYRRHENIAN SEA/WESTERN MED	6SEP71
	PROJECTED MOVEMENTS 9 - 15 SEPTEMBER 1971				
(3)	VMFA-333	9SEP71	SOUDA BAY, CRETE	OPS AEGEAN SEA	10SEP71
		14SEP71	OPS AEGEAN SEA	ATHENS, GREECE	15SEP71
(8)	LANFORCARIB 1-71 (BLT 1/6)	9SEP71	CAMP LEJEUNE, NORTH CAROLINA	VIEQUES, PUERTO RICO	15SEP71

NOTES:

(1) CG FMFLANT ACTIVATED THE 8TH MAB (HQ, 8TH MAB, BLT 1/2 (LANFORSIXTHFLT 2-71), BLT 3/6 AND PROV MAG-40) FOR PLANNING AND PARTICIPATION IN EXERCISE DEEP FURROW-71. EXERCISE DEEP FURROW-71 IS A JOINT AND COMBINED NATO EXERCISE TO BE CONDUCTED DURING THE PERIOD 9-20OCT71 TO INCLUDE AMPHIBIOUS LANDINGS IN TURKISH THRACE BY A COMBINED U.S. AND UNITED KINGDOM/ITALIAN LANDING FORCE. BGEN T. H. MILLER, JR., AWC 2D MAW, IS DESIGNATED AS CG 8TH MAB.

(2) THE 7TH MAB (HQ 7TH MAB, 7TH MARINES (W/2/7, 3/7 & 1/3), 3D BN, 11TH MAR(-), BLT 2/1 (LANFOR RESERVE) AND PROV MAG-50) IS PARTICIPATING IN ROPEVAL 3-71 DURING THE PERIOD 8-17SEP71 IN THE CAMP PENDLETON/CLEVELAND NATIONAL FOREST AREAS. THE 7TH MAB WAS ACTIVATED FOR PLANNING ON 1JUL71 AND FOR EMBARKATION AND OPERATIONS EFFECTIVE 071500Z SEP71. ROPEVAL 3-71 IS A MAB SIZE AMPHIBIOUS EXERCISE. LANDING FORCE OPERATIONS ARE DESIGNED TO TRAIN FORCES IN THE PLANNING AND EXECUTION OF AMPHIBIOUS OPERATIONS INVOLVING THE TECHNIQUE OF STAND-OFF AMPHIBIOUS ASSAULT AND ASPECTS OF THE SEA-BASING CONCEPT. THE 3D BN, 1ST MAR, AND VMA(AW)-242 HAVE BEEN DESIGNATED AS THE AGGRESSOR FORCES. BGEN P. G. GRAHAM, CG FORTRPS, FMFPAC, HAS BEEN DESIGNATED AS CG 7TH MAB.

(3) CONDUCTING ANCHORAGE AT SOUDA BAY, CRETE (7-9SEP71), AND SCHEDULED FOR OPERATIONS IN THE AEGEAN SEA DURING THE PERIOD 10-14SEP71. UPKEEP SCHEDULED AT ATHENS, GREECE, FROM 15-26SEP71.

(4) ENROUTE (8-10SEP71) TO LIVORNO, ITALY, FOR PORT VISIT DURING THE PERIOD 11-20SEP71.

(5) CONDUCTING OPERATIONS IN THE TYRRHENIAN SEA/WESTERN MED AREA (6-10SEP71). SCHEDULED FOR PORT VISITS IN NORTHERN ITALIAN PORTS (11-16SEP71).

(6) AT SUBIC BAY, R.P.I., FOR UPKEEP DURING THE PERIOD 7-24SEP71.

(7) ARRIVED OKINAWA ON 6SEP71 AND DISEMBARKED. WILL BE STANDING DOWN UNTIL RELIEVED APPROXIMATELY 20OCT71.

(8) SCHEDULED TO DEPART CAMP LEJEUNE ON 9SEP71 ENROUTE MOREHEAD CITY, NORTH CAROLINA, FOR EMBARKATION AND DEPARTURE FOR VIEQUES, PUERTO RICO, ON 11SEP71. EDA VIEQUES IS 15SEP71.

UNCLASSIFIED

Unclassified

[redacted]

TAB 31-2

[redacted]

UNCLASSIFIED

MARINE CORPS COMMAND CENTER

FMF PACIFIC UNIT LOCATIONS AND STRENGTHS* (MIDPAC/EASTPAC)

8 SEPTEMBER 1971

MIDPAC

FMFPAC

HQ, FMFPAC

1st MAR BDE

HQ, 1ST MAR BDE (KANEOHE)

3D MARINES (-)(REIN)
- 1/3 (CAMPEN)
- 2/3

MAG-24
- VMFA-122 (F-4B)
- VMFA-212 (F-4J)
- VMFA-235 (F-4J)
- HMM-262 (CH-46D)
- HMH-463 (CH-53D)
- DET, VMO-6 (-) (OV-10A)
- DET, HML-367(-) (UH-1E)

MIDPAC STRENGTH RECAPITULATION	USMC	USN
HQ, FMFPAC	1,060	35
HQ, 1ST MAR BDE	253	28
3D MAR(-)(REIN)	1,025	57
SERVICE/SUPPORT UNITS	701	
MAG-24	1,894	34
OTHER	721	13
GRAND TOTAL MIDPAC	5,654	167

EASTPAC

I MAF

HQ, I MAF (CAMP PENDLETON)

1ST MAR DIV (-) (REIN)

1ST MARINES
- 1/1
- 2/1
- 3/1

5TH MARINES 3/3 (CADRE)
- 1/5
- 2/5
- 3/5

7TH MARINES
- 1/7 (CADRE)
- 2/7
- 3/7

FORTRPS FMFPAC

HQ, FORTRPS FMFPAC (29 PALMS)

3D MAW

HQ, 3D MAW (EL TORO)

MAG-11 (EL TORO)
- VMFA-314
- VMFA-323 (F-4B)
- VMFA-334
- VMFA-531 (F-4B)

MAG-13 (EL TORO)
- VMA-214 (A-4F)
- VMA-223 (A-4F)
- VMA(AW)-225
- VMA(AW)-242 (A-6A)
- VMCJ-3 (RF-4B/EA-6A)

MWSG-37 (EL TORO)
- VMGR-352 (KC-130F)

MHTG-30 (SANTA ANA)
- HMMT-301 (CH-53A)
- HMMT-302 (CH-46F)

MAG-16 (SANTA ANA)
- HMM-161 (CH-46D)
- HMM-163 (CH-46F)
- HMH-361 (CH-53A)
- HMH-363 (CH-53A)

MAG-16 ELEMENTS (CAMPEN)
- VMO-2
- HML-267 (OV-10A/UH-1E)

MCCRTG-10 (YUMA)
- VMFAT-101 (F-4B)
- VMAT-102 (A-4E)
- VMT-103 (TA-4F/J)

1ST FSR

	USMC	USN
HQ, I MAF	21	
1ST MAR DIV (-) (REIN)	14,348	524
HQ, FORTRPS FMFPAC	1,495	75
3D MAW	11,109	223
1ST FSR	1,564	44
GRAND TOTAL EASTPAC	28,537	866

*SOURCE: MARES FORSTAT REPORT DATED 2AUG71.

Unclassified

UNCLA[redacted]ED

TAB 32

[redacted]

MARINE CORPS COMMAND CENTER

FMF PACIFIC UNIT LOCATIONS AND STRENGTHS AND OSD CEILING CONSIDERATIONS (WESTPAC)

UNCLASSIFIED

8 SEPTEMBER 1971

RVN

USMC TRANSITIONAL SUPPORT FORCE

NAVFORV	3
HQ STAFF MACV	49
JUSPAO	4
SAE	2
NAVADVGRU	76
SOG	12
DEF COM AGCY	5
SU #1, 1ST ANGLICO	175
EMBASSY SECURITY	156
CORDS	5
DET, H&HS-18	20
DOD SPEC REP	3
ROK LOG TEAM	13
CREDIT ACCOUNT	4
WESTPAC TRANS OFF	1
TOTAL - OSD PROGRAM XIV SPACE AUTHORIZATION	528

	USMC	USN
OSD PROGRAM XIV SPACE AUTHORIZATION	528	
SUB UNIT 1, 1ST ANGLICO	168	10
MACV STAFF/MACV FIELD	159	
NAVADVGRU/MACV UNITS	32	
OTHERS	172	
TOTAL RVN STRENGTH AS OF 2SEP71.	531	10

OKINAWA

III MAF (TF-79)

HQ, III MAF

3D MARDIV (-) (REIN) (TF-79.2)

HQ, 3D MARDIV (-)(REIN)
- 4TH MARINES
  - 1/4 (BLT)
  - 2/4
  - 3/4
- 9TH MARINES
  - 1/9
  - 2/9 (31ST MAU)
  - 3/9

1ST MAW

MAG-36

VMGR-152	(KC-130F)
VMO-6 (-)	(OV-10A)
HMH-462	(CH-53D)
HMM-164	(CH-46D/CH-53D/UH-1E)(31ST MAU)
HMM-165	(CH-46D)
HML-367	(UH-1E)

3D FSR

	USMC	USN
OSD PROGRAM XIV SPACE AUTHORIZATION	19,249	934
OKINAWA STRENGTH RECAPITULATION		
III MAF		
HQ, III MAF	131	
3D MARDIV (-)(REIN)	12,188	780
1ST MAW ELEMENTS	2,367	31
3D FSR	3,105	51
(1) III MAF TOTAL	17,791	862
OTHERS		
MCB CAMP BUTLER/NON FMF	1,198	25
HOSPITALIZED	0	
NON-DEPLOYABLE CASUALS	0	
OTHER TOTAL	1,198	25
GRAND TOTAL OKINAWA STRENGTH AS OF 26AUG71.	18,989	887

JAPAN

1ST MAW (TF-79.3)

HQ, 1ST MAW

MAG-12

VMA-211	(A-4E)
VMA-311	(A-4E)
VMA(AW)-533	(A-6A)

MAG-15

VMFA-115	(F-4B)
VMFA-232	(F-4J)
VMCJ-1	(EA-6A/RF-4B)

	USMC	USN
OSD PROGRAM XIV SPACE AUTHORIZATION	7,000	
JAPAN STRENGTH RECAPITULATION		
HQ, 1ST MAW	851	54
1ST MAW	4,939	70
(2) NON-FMF	897	
GRAND TOTAL JAPAN STRENGTH AS OF 26AUG71	6,687	124

NOTES
(1) LESS ONE MAU.
(2) INCLUDES MCAS, IWAKUNI, MB YOKOSUKA, MB SASEBO AND CO "E" MAR SPT BN.

SOURCES: RVN STRENGTH: COMUSMACV WEEKLY STRENGTH REPORT MSG 040813ZSEP71.

OKI/JAPAN STRENGTH: FMFPAC WESTPAC STRENGTH VERIFICATION MSG 010043ZSEP71.

UNCLASSIFIED

Unclassified

TAB 33

[redacted]

UNCLASSIFIED

Department of Defense

NUMBER OF CASUALTIES INCURRED BY U. S. MILITARY PERSONNEL
IN CONNECTION WITH THE CONFLICT IN VIET-NAM

Cumulative from January 1, 1961 through August 28, 1971

8 SEPTEMBER 1971

	Army	Navy *	Marine Corps	Air Force	Total
A. CASUALTIES RESULTING FROM ACTIONS BY HOSTILE FORCES					
1. Killed	25,137	1,050	11,465	455	38,107
2. Wounded or Injured					
a. Died of wounds	3,491	140	1,449	44	5,124
b. Nonfatal wounds					
Hospital care required	95,994	4,086	51,356	812	152,248
Hospital care not required	103,917	5,835	37,161	2,295	149,208
3. Missing					
a. Died while missing	1,639	182	5	395	2,221
b. Returned to control	48	7	6	26	87
c. Current missing	256	113	81	558	1,008
4. Captured or Interned					
a. Died while captured or interned	15	-	3	1	19
b. Returned to control	56	3	5	6	70
c. Current captured or interned	62	144	23	236	465
5. Deaths					
a. From aircraft accidents/incidents					
Fixed Wing	89	155	139	695	1,078
Helicopter	2,228	62	429	59	2,778
b. From ground action	27,965	1,155	12,354	141	41,615
TOTAL DEATHS a/	30,282	1,372	12,922	895	45,471
B. CASUALTIES NOT THE RESULT OF ACTIONS BY HOSTILE FORCES					
6. Current Missing	130	-	12	-	142
7. Deaths					
a. From aircraft accidents/incidents					
Fixed Wing	250	172	45	279	746
Helicopter	1,694	52	242	18	2,006
b. From other causes	4,729	609	1,391	261	6,990
TOTAL DEATHS	6,673	833	1,678	558	9,742

a/ Sum of lines 1, 2a, 3a and 4a.

*Navy figures include a small number of Coast Guard casualties.

Department of Defense
OASD (Comptroller)
Directorate for Information Operations
September 1, 1971

TAB 45-2

UNCLASSIFIED

UNCLASSIFIED
Unclassified

[redacted]

MARINE CORPS COMMAND CENTER

8 SEPTEMBER 1971

UNCLASSIFIED

DISPOSITION AND STRENGTH OF MAJOR US AND FW FORCES IN RVN

DISPOSITION

MR RECAP

MR I*	XXIV CORPS
220 MILES LENGTH@	30-75 MILES WIDTH
14,600 SQ MI AREA	2,860,300 CIV POP
	101ST ABN DIV (AM)
USA 19 BNs	23D INF DIV(AMERICAL)
ARVN 36 BNs	2D ROKMC BDE
ROKMC 4 BNs	147TH VNMC BDE
VNMC 6 BNs	258TH VNMC BDE
ARVN CAV 4 BNs	1ST ARVN DIV
	2D ARVN DIV
TOTAL 69 BNs	
MR II*	SRAG (NHA TRANG)
315 MILES LENGTH@	45-130 MILES WIDTH
31,300 SQ MI AREA	2,898,200 CIV POP
USA 3 BNs	
ARVN 32 BNs	ROK CAP INF DIV
ROK 18 BNs	9TH ROK DIV
ARVN CAV 3	22D ARVN DIV
TOTAL 56 BNs	23D ARVN DIV
MR III*	TRAC (LONG BINH)
90 MILES LENGTH@	55-115 MILES WIDTH
10,100 SQ MI AREA	5,133,000 CIV POP
USA 5 BNs	2D BDE, 25TH INF DIV
ARVN 54 BNs	1ST AUSTRALIAN TF
AUSTRALIA 2 BNs	ROYAL THAI VOL REGT
THAILAND 3 BNs	1ST CAV DIV (AM)
ARVN CAV 5 BNs	5TH ARVN DIV
VNMC 3 BNs	18TH ARVN DIV
	25TH ARVN DIV
TOTAL 72 BNs	369TH VNMC BDE
	1ST ARVN ABN DIV
MR IV*	DRAC (CAN THO)
195 MILES LENGTH@	35-115 MILES WIDTH
14,600 SQ MI AREA	5,700,1000 CIV POP
ARVN 41 BNs	7TH ARVN DIV
ARVN CAV 5 BNs	9TH ARVN DIV
	21ST ARVN DIV
TOTAL 46 BNs	

@ Coastal Arc

* See RVN Recap note

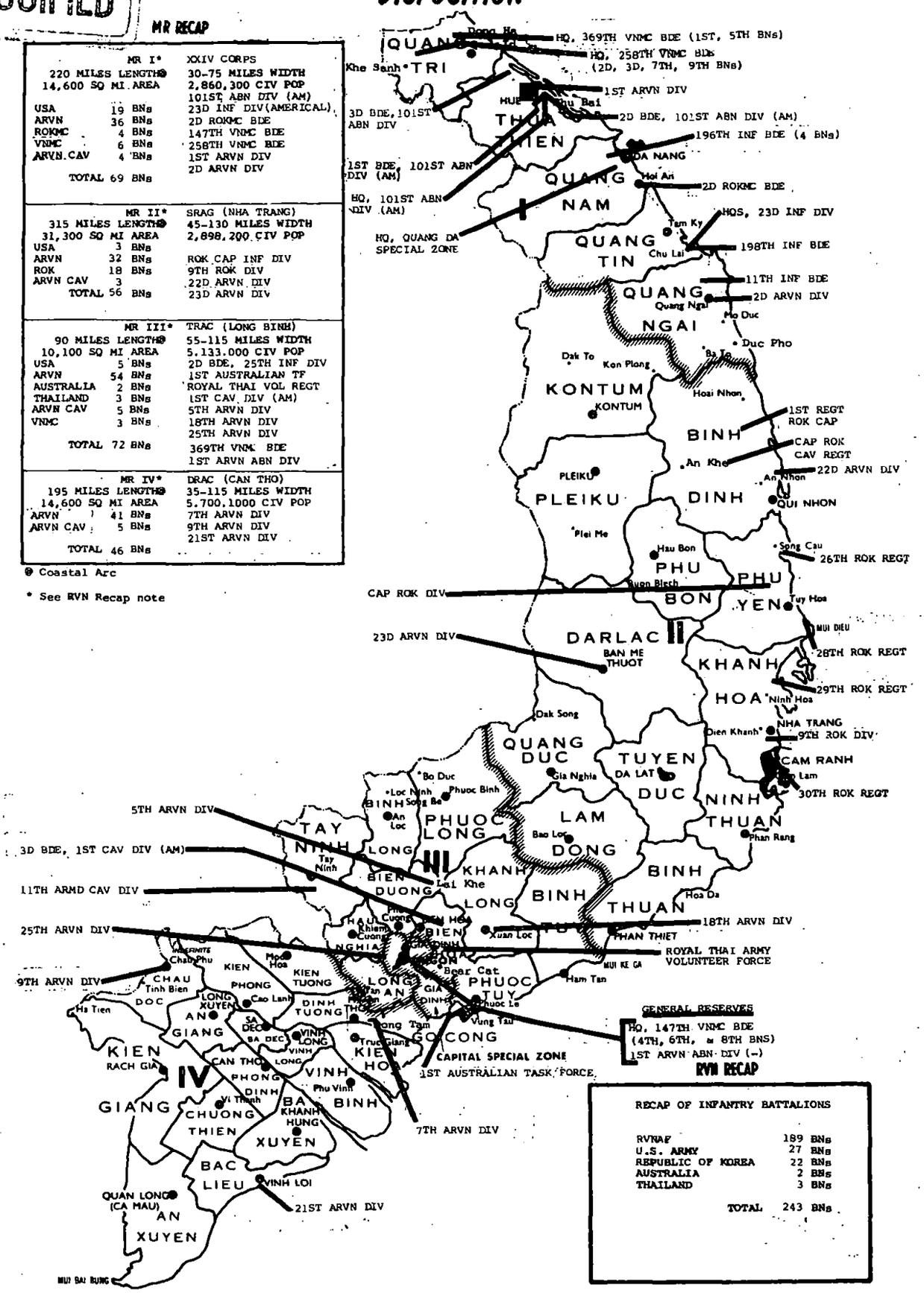

RVN RECAP

RECAP OF INFANTRY BATTALIONS	
RVNAF	189 BNs
U.S. ARMY	27 BNs
REPUBLIC OF KOREA	22 BNs
AUSTRALIA	2 BNs
THAILAND	3 BNs
TOTAL	243 BNs

TAB 46-1

Unclassified [redacted]

UNCLASSIFIED

[redacted]

UNCLASSIFIED

MARINE CORPS COMMAND CENTER

STRENGTHS*

8 SEPTEMBER 1971

RVN ARMED FORCES (RVNAF)

ARMY (ARVN)	412,705
NAVY (VNN)	41,184
AIR FORCE (VNAF)	50,245
MARINE CORPS (VNMC)	13,806
REGIONAL FORCES (RF)	295,019
POPULAR FORCES (PF)	247,638
TOTAL RVNAF	1,060,597

UNITED STATES FORCES

ARMY	170,440
NAVY	9,974
AIR FORCE	35,684
MARINE CORPS	531
COAST GUARD	110
TOTAL U.S.	216,739

FREE WORLD MILITARY ASSISTANCE FORCES (FWMAF)

REPUBLIC OF KOREA	48,428
AUSTRALIA	6,074
PHILIPPINES	81
THAILAND	6,362
NEW ZEALAND	269
REPUBLIC OF CHINA	31
SPAIN	7
TOTAL FWMAF	61,252

TOTAL FORCES IN RVN 1,338,588

★ SOURCE: RVNAF - MACV MONTHLY RPT OF GVN STRENGTH AS OF 31MAY71
ALL OTHERS - MACV WEEKLY STRENGTH RPT AS OF 2400, 2SEP71.

Unclassified

UNCLASSIFIED

[redacted]

TAB 46-2

UNCLASSIFIED

MARINE CORPS COMMAND CENTER

TABLE OF CONTENTS

15 SEPTEMBER 1971

	LIST OF EFFECTIVE TABS	DATE OF LATEST CHANGE
SECTION I - MARINE CORPS FORCES - WORLD WIDE		
ALLOCATION OF MARINE CORPS PERSONNEL	11	15SEP71●
SELECTED PERSONNEL AND AIRCRAFT DATA	12	15SEP71●
UNITED STATES MARINE CORPS RESERVE	13-1	30DEC70
	13-2	23DEC70
	13-3	4AUG71
	13-4	23DEC70
MISCELLANEOUS NON-FMF UNITS	14-1	8SEP71
(MARINE BARRACKS)	14-2	30JUN71
(MARINE SECURITY GUARD BATTALION)	14-3	14APR71
(MARINE DETACHMENTS AFLOAT)	14-4	14APR71
	14-5	30JUN71
SECTION II - STATUS OF FLEET MARINE FORCES		
STATUS OF FMF UNITS	21-1	15SEP71●
	21-2	15SEP71●
	21-3	15SEP71●
	21-4	15SEP71●
	21-5	15SEP71●
	21-6	15SEP71●
	21-7	15SEP71●
	21-8	15SEP71●
	21-9	15SEP71●
RECAPITULATION OF FMF ACTUAL STRENGTHS	22	15SEP71●
DISTRIBUTION OF MAJOR GROUND EQUIPMENT AND AIRCRAFT	23	15SEP71●
SECTION III - DISPOSITION OF FLEET MARINE FORCE UNITS		
FLEET MARINE FORCE DISPOSITION, DISTRIBUTION BY BATTALION/ SQUADRON AND MOVEMENTS	31-1	15SEP71●
	31-2	15SEP71●
FMF PACIFIC UNIT LOCATIONS AND STRENGTHS (MIDPAC/EASTPAC)	32	15SEP71●
FMF PACIFIC UNIT LOCATIONS, STRENGTHS AND OSD CEILING CONSIDERATIONS (WESTPAC)	33	15SEP71●
LANDING FORCES - 7TH FLEET	34	15SEP71●
FMF ATLANTIC UNIT LOCATIONS AND STRENGTHS	35	15SEP71●
LANDING FORCES - MEDITERRANEAN AND CARIBBEAN	36-1	15SEP71●
GUANTANAMO BAY BATTALION	36-2	15SEP71●
SECTION IV - GENERAL		
CHRONOLOGY OF SIGNIFICANT EVENTS	41-1	17MAR71
	41-2	21APR71
	41-3	23JUN71
	41-4	16JUN71
	41-5	1SEP71
USMC/ENEMY CASUALTIES IN RVN; CUMULATIVE DOD CASUALTY FIGURES ON U.S. MILITARY PERSONNEL AND COMPARATIVE USMC/ENEMY KIA IN CONNECTION WITH THE CONFLICT IN RVN	45-1	28JUL71
	45-2	15SEP71●
	45-3	26MAY71
	45-4	1SEP71
DISPOSITION AND STRENGTH OF MAJOR U.S. AND FW FORCES IN RVN	46-1	8SEP71
	46-2	15SEP71●
COMUSMACV STAFF, PRINCIPAL MARINE OFFICERS HQ MACV	47	1SEP71
REPUBLIC OF KOREA MARINE CORPS	48-1	15SEP71●
REPUBLIC OF VIETNAM MARINE CORPS	48-2	7JUL71
VIETNAM GEOGRAPHIC AND CLIMATE DATA	49-1	18NOV70
	49-2	18NOV70
CHRONOLOGY OF FMF DEPLOYMENT AND STRENGTH IN RVN	410-1	20JAN71
	410-2	25NOV70
	410-3	25NOV70
	410-4	25NOV70
	410-5	25NOV70
	410-6	25NOV70
	410-7	9DEC70
	410-8	10MAR71
	410-9	19MAY71
	410-10	23JUN71
	410-11	21JUL71
	410-12	21JUL71

UNCLASSIFIED

Unclassified

CONTENTS OF THIS PUBLICATION
DOWNGRADED AT 3 YEAR INTERVALS
DECLASSIFIED AFTER 12 YEARS
DOD DIR 5200.10

MARINE CORPS
SEP 16 1971
REFERENCE BRANCH

Unclassified

UNCLASSIFIED

MARINE CORPS COMMAND CENTER

ALLOCATION OF MARINE CORPS PERSONNEL &

15 SEPTEMBER 1971

	TOTAL		GROUND		AVIATION		GRAND TOTAL	PERCENT
	OFF	# ENL	OFF	# ENL	** OFF	#** ENL		
OPERATING FORCE								
FLEET MARINE FORCE TOTAL	9,293	90,664	4,544	58,577	4,749	32,087	99,957	47.32
SECURITY FORCES								
NAVY DEPARTMENT	467	8,872	467	8,872			9,339	4.42
STATE DEPARTMENT	16	908	16	908			924	.44
FT MEADE, MARYLAND	16	327	16	327			343	.16
SPECIAL ACTIVITIES	49	597	49	597			646	.31
SECURITY FORCE TOTAL	548	10,704	548	10,704			11,252	5.33
MARINES AFLOAT	191	1,788	172	1,755	19	33	1,979	.94
OPERATING FORCE TOTAL	10,032	103,156	5,264	71,036	4,768	32,120	113,188	53.58
TRAINING BASE								
RECRUITS		16,426		16,426			16,426	7.78
STUDENTS								
INDIVIDUAL CBT TRAINEES	2	3,867	2	3,867			3,869	1.83
STAGING BATTALION	1	654	1	645		9	655	.31
BST/AVN TRAINEES	301	3,441	1	1,731	300	1,710	3,742	1.77
OTHER	2,049	8,009	1,100	4,551	949	3,458	10,058	4.76
STUDENTS TOTAL	2,353	15,971	1,104	10,794	1,249	5,177	18,324	8.67
OVERHEAD								
RECRUIT TRAINING	422	4,105	422	4,104		1	4,527	2.14
STUDENT TRAINING	1,831	11,004	1,376	9,397	455	1,607	12,835	6.08
OVERHEAD TOTAL	2,253	15,109	1,798	13,501	455	1,608	17,362	8.22
RESERVE TRAINING PROGRAM	684	4,836	472	2,193	212	2,643	5,520	2.61
TRAINING BASE TOTAL	5,290	52,342	3,374	42,914	1,916	9,428	57,632	27.28
SUPPORTING BASE								
SUPPLY ESTABLISHMENT	358	2,364	358	2,364			2,722	1.29
BASE SERVICE AND ADMIN.	2,829	15,556	2,048	10,706	781	4,850	18,385	8.70
JOINT AND LIAISON	567	374	428	235	139	139	941	.45
SUPPORTING BASE TOTAL	3,754	18,294	2,834	13,305	920	4,989	22,048	10.44
TRANSIENTS, PATIENTS & PRISONERS								
NON-MOVING TRANSIENTS	112	2,217	79	1,982	33	235	2,329	1.10
TRANSIENTS	1,955	12,528	1,586	10,232	369	2,296	14,483	6.86
PATIENTS	34	610	22	531	12	73	644	.30
HOSPITALIZED CASUALTIES	19	295	16	245	3	50	314	.15
PRISONERS	7	310	2	247	5	63	317	.15
CAPTURED OR MISSING	66	50	5	44	61	6	116	.06
TRANS, PATIENTS & PRISONERS TOTAL	2,193	16,010	1,710	13,281	483	2,729	18,203	8.62
UNKNOWNS	135	99	135	82		17	*234	.07
MARINE CORPS TOTAL	21,404	189,901	13,317	140,618	8,087	49,283	*211,305	100.00%

EXCLUDES 6 MONTH A/D TRAINEES

** INCLUDES AVN PERS. PERFORMING DUTY WITH GROUND FUNCTIONS

	OFF	ENL
FMF	1,035	72
RCTG	150	151
TOTAL	1,185	223

* INCLUDES 66 RESERVE OFFICERS ON TEMPORARY ACTIVE DUTY

& SOURCE: HQMC 1080-64 (MONTHLY REPORT OF ALLOCATION OF MILITARY PERSONNEL) AS OF 31JUL71.

TAB 11

UNCLASSIFIED

Unclassified

UNCLASSIFIED

[redacted]

MARINE CORPS COMMAND CENTER

SELECTED PERSONNEL AND AIRCRAFT DATA

UNCLASSIFIED

PERSONNEL

15 SEPTEMBER 1971

		STRENGTH	PERCENT USMC	PERCENT FMF	PERCENT FMFPAC
USMC TOTAL	*	206,489	100.00		
FLEET MARINE FORCES		98,137	47.53	100.00	
FMF ATLANTIC	#	38,261	18.53	38.99	
FMF PACIFIC	#	59,876	29.00	61.01	
VIETNAM	¢	534	00.26		

SOURCE: * HQMC 1080-20 (ESTIMATED PERSONNEL DATA) AS OF 31AUG71.
MARES FORSTAT REPORT DATED 7SEP71.
¢ MACV WEEKLY STRENGTH REPORT AS OF 9SEP71.

AIRCRAFT

15 SEPTEMBER 1971

		FIXW	HELO	TOTAL	PERCENT USMC	PERCENT FMF	PERCENT FMFPAC
USMC TOTALS	**	771	607	1,378	100.00		
FLEET MARINE FORCES	@	677	556	1,233	89.48	100.00	
FMF ATLANTIC	@	300	255	555	40.34	45.01	
FMF PACIFIC	@	377	301	678	49.14	54.99	

SOURCE: ** DC/S AIR STATUS BOARD PHOTO AS OF 10AUG71.
@ MARES FORSTAT REPORT DATED 7SEP71.

UNCLASSIFIED

[redacted]

TAB 12

Unclassified

[redacted] UNCLASSIFIED

MARINE CORPS COMMAND CENTER

STATUS OF FMF UNITS

15 SEPTEMBER 1971

UNIT	NOTE	UNIT COMMANDER	LOCATION	STRENGTH USMC	STRENGTH USN	UNIT READINESS ★ CURRENT RATE	RSN	P	S	R	T	EXPECTED RATE	BY	MAJOR EQUIPMENT
FMF				98137	2833									
MIDPAC				5585	166									
EMPAC		LTGEN W. K. JONES	HAWAII	59876	1811	C1		1	1	1	1			
HQ FMFPAC				1054	35									
H&SBN		COL R. G. LAUFFER	CP SMITH	997	27	C1		1	1	1	1			
DET 2, 21ST DENTAL CO (-)		CAPT M. R. HAMILTON (USN)			8	C1		1	1	1	1			
HQ SQDN		LTCOL C. E. DORFFELD	KANEOHE	57		C4	P	4	1	1	1	C3	711231	5/T-28B, 2/UH-34D, 1/US-2B, 1/VH-34D
1ST ANGLICO (-)		MAJ H. S. MORGAN JR.	SDIEGO	149	5	C3	T	2	2	2	3	C2	711031	
SU 1, 1ST ANGLICO (MACV)	*	LTCOL D. GRAY	SAIGON	185	10	C1		1	1	1	1			
1ST RADIO BN		LTCOL J. K. HYATT JR.	KANEOHE	387		C1		1	1	1	1			
1ST MARINE BRIGADE		BGEN V. A. ARMSTRONG	KANEOHE	3810	116	C4	P	4	2	2	3	C3	711031	
H&S CO		CAPT H. J. TRAUTWEIN JR.		258	15	C1		1	1	1	1			
1ST ITT		1STLT R. R. SCOTT		11		C1		1	1	1	1			
11TH CIT (FMFPAC)	*	CAPT K. W. CLEM		11		C1		1	1	1	1			
21ST DENTAL CO (-)		CDR J. D. CRAWFORD (USN)			13	C1		1	1	1	1			
3D MARINES (-) (REIN)		LTCOL J. P. CONNOLLY II	KANEOHE			C4	P	4	2	2	4	C3	711031	
HQCO (-)		CAPT E. P. MUSSETT JR.		55		C4	P	4	2	3	4	C3	711031	
1ST BN	23	MAJ P. J. KIESELBACH	CAMPEN	807	53	C3	P	3	1	1	3	C2	711031	6/105 HOW TD, 8/106MM RR, 8/81 MORT
2D BN (CADRE)		MAJ F. W. BEEKMAN	KANEOHE	4		C4	N	5	3	2	5	C3	711031	8/106MM RR, 8/81 MORT
CO A, 3D ENGR BN (-)		CAPT T. M. COOK		105		C3	P	3	2	1	2	C2	711031	
CO A (REIN), 3D MT BN (-)		1STLT R. S. DOLGERT		24		C4	P	4	1	1	4	C3	711031	
CO A (REIN), 3D SP BN (-) (CADRE)		CAPT R. F. BAKER		33		C4	P	4	2	2	4	C3	711031	
CO A, 3D RECON BN (-) (REIN) (CADRE)						C4	P	4	1	1	4	C3	711031	
CO A (REIN), 3D MED BN (-) (CADRE)						C4	P	4	2	1	4	C3	711031	
1ST BN (-), 12TH MAR		MAJ R. J. COOGAN	KANEOHE	194	1	C4	P	4	1	1	4	C3	711031	18/105 HOW TD
CO D, 3D AMTRAC BN (-)		CAPT K. R. BURNS		151		C4	P	4	1	2	4	C3	711001	3/LVTP-5 COMD, 44/LVTP-5, 1/LVTR
COMM SPT CO, 7TH COMM BN (-)		MAJ R. T. HIMMERICH		169		C3	R	3	2	3	2	C2	711230	
PROV SERV BN		LTCOL J. W. BROWN		259		C4	P	4	4	3	4	C3	711231	
MAG-24		COL R. E. CAREY	KANEOHE	1729	34	C1	X	4	2	3	4	C3	710915	
H&MS-24		LTCOL C. L. PHILLIPS		412		C4	S	2	4	4	2	C3	710901	1/C-117D, 2/TA-4F
MABS-24		LTCOL W. R. LEDBETTER		297	34	C4	P	4	2	2	2	C3	710915	
MATCU-70		WO O. F. GOUR JR.		39		C4	P	4	2	1	4	C4	711201	
VMFA-122		LTCOL L. FURSTENBERG		171		C4	P	4	4	4	4	C4	711201	7/F-4B
VMFA-212		LTCOL R. D. REVIE		205		C3	X	4	2	1	3			13/F-4J
VMFA-235		MAJ G. H. LEACH		206		C3	X	4	1	1	4	C2	711231	16/F-4J
MACS-2		LTCOL P. L. ELLIOTT		161		C4	P	4	1	2	3	C3	711101	
HMM-262		MAJ C. M. LIVELY		106		C4	P	4	1	4	4	C4	711231	30/CH-46D
HMH-463		MAJ M. E. EDWARDS		71		C4	P	4	2	4	4	C4	711101	9/CH-53D
DET, VMO-6 (-)		MAJ B. H. ADAMS		21		C4	P	4	4	4	4	C3	711231	3/OV-10A
DET, HML-367 (-)		CAPT C. T. CREWS		40		C4	P	4	1	1	4	C3	711231	8/UH-1E
WESTPAC				24984	785									
FMFPAC														
III MAF		LTGEN D. J. ROBERTSON	CP COURTNEY	24984	785									
H&SCO				131		C1		1	1	1	1			
3D MARDIV (-) (REIN) (III MAF)	*	MAJGEN L. METZGER	CP COURTNEY	13796	629	C2	T	2	1	2	2	C2	720601	
HQBN		COL H.A.F.VONDERHEYDE		1411	47	C2	T	1	1	2	2	C1	720601	
3D ITT	22	CAPT M. W. MARINE	CP HANSEN											
7TH ITT	22	CAPT E. N. SIBLEY												
11TH ITT	22	1STLT M. C. MONAHAN												
15TH ITT	22	WO G. J. CROGHAN												
17TH ITT	22	CAPT G. H. JOHNSON JR.												
SCAMP	22													
3D CIT		CAPT D. D. JAMES		13		C2	P	2	1	2	1	C1	720601	
1ST SSCT		CAPT G. L. NASON	CP COURTNEY	5		C3	S	1	3	1	1	C1	720530	
3D DENTAL CO		CAPT W. J. KENNEDY (USN)		5	60	C1		1	1	1	1			

★ PARENTHETIC UNIT INDICATES OPCON WHEN DIFFERENT FROM ORGANIZATIONAL STRUCTURE.

TAB 21-1

[redacted]

Unclassified

UNCLASSIFIED

[redacted] UNCLASSIFIED

MARINE CORPS COMMAND CENTER

STATUS OF FMF UNITS **

15 SEPTEMBER 1971

UNIT *	NOTE	UNIT COMMANDER	LOCATION	STRENGTH USMC	STRENGTH USN	UNIT READINESS ☆ CURRENT RATE	RSN	P	S	R	T	EXPECTED RATE	EXPECTED BY	MAJOR EQUIPMENT
4TH MARINES		COL R. J. PERRICH	CP HANSEN			C2	P	2	1	1	2	C2	720601	
HQCO		CAPT S. M. HARTNETT		190	5	C2	T	1	1	2	2	C2	720601	
1STBN	1	LTCOL D. G. ROBISON		1099	37	C2	T	1	1	1	2	C1	710915	8/106MM RR, 8/81 MORT
2DBN	13	LTCOL J. PHILLIPS		956	24	C2	R	2	1	2	2	C1	710930	4/106MM RR, 8/81 MORT
3DBN	30	LTCOL W. J. HALLISEY JR.	FUJI	1028	31	C2	P	2	1	1	2	C2	720215	8/106MM RR, 8/81 MORT
9TH MARINES		COL R. T. LAWRENCE	CP SCHWAB			C2	P	2	1	2	2	C1	711005	
HQCO		CAPT M. H. CRAFTON JR.		238	7	C2	R	1	1	2	2	C1	710930	
1STBN		LTCOL P. B. FRIEDRICHS		909	23	C2	X	3	1	2	2	C1	720201	8/106MM RR, 8/81 MORT
2DBN (31ST MAU)	2*	LTCOL F. J. JOHNSON JR.	31ST MAU	1064	40	C1		1	1	1	1			8/106MM RR, 8/81 MORT
3DBN		LTCOL B. S. SNELL	CP SCHWAB	895	32	C2	X	3	1	2	2	C1	711115	8/106MM RR, 3/81 MORT
12TH MARINES (-)		COL J. P. O'CONNELL	CP HANSEN			C2	T	2	1	1	2	C1	720630	
HQ BTRY (-)		CAPT D. J. LABOISSIERE		211	6	C2	R	1	1	2	2	C1	720630	
2DBN		LTCOL E. D. LITZENBERGER		482	14	C2	P	2	1	1	2	C2	721205	18/105 HOW TD
3DBN	30	LTCOL W. J. HALLISEY JR		481	10	C2	P	2	1	1	2	C1	720630	18/105 HOW TD
4THBN (-) (REIN)		MAJ W. C. DOERNER		466	6	C2	T	2	1	1	2	C1	711201	18/155 HOW TD, 1/M51 VTR, 18/155 HOW SP
3D PLAT, 1ST 8" HOW BTRY	4													2/8" HOW SP
3D SERV BN (-)		COL E. B. HART	CP HANSEN	684	18	C2	T	2	2	2	2	C1	720201	
3D TANK BN (-)		LTCOL C. R. STIFFLER		583	12	C2	T	2	1	1	2	C2	710930	53/M48 TANK, 5/M51 VTR 8/M67 TANK
9TH MT BN (-)		LTCOL A. J. EAGAN		268	7	C2	T	1	1	1	2	C2	711114	
3D MED BN (-)		LTCOL W. J. THOMAS		117	157	C4	P	4	3	3	3	C3	711101	
1ST HOSPITAL CO (CADRE)		LTJG J. W. VRABEL (USN)		29	9	C4	P	4	1	2	4	C4	711231	
3D MT BN (-)		MAJ B. L. PARKS	CP SCHWAB	167	6	C2	T	1	1	1	2	C2	720601	
3D RECON BN (-)		LTCOL J. B. WALKER JR.	ONNA	334	22	C2	P	2	1	1	1	C1	711105	
3D ENGR BN (-) (REIN)	17	LTCOL C. R. GIBSON	CP SCHWAB	614	10	C2	P	2	1	2	2	C1	711215	
CO D (REIN), 7TH ENGR BN(-)		CAPT H. L. CAMPBELL	CP HAGUE	99		C2	P	2	1	2	2	C2	711215	
BRIDGE PLAT, 1ST BRIDGE CO		2DLT W. L. KLEINMETER		18										
7TH COMM BN (-)		LTCOL W. A. SCOTT JR.	CP SCHWAB	454	8	C2	T	2	1	2	2	C2	720601	
3D SP BN (-)		LTCOL G. H. RIPLEY	CP HANSEN	373	31	C2	T	1	1	1	2	C2	720901	
1ST AMTRAC BN (-)		LTCOL J. G. BUCKMAN	CP SCHWAB	603	7	C2	P	2	2	2	2	C1	710930	6/LVTE-1, 9/LVTP-5 CMD, 84/LVTP-5, 3/LVTR
1ST MAW (11' MAF)	*	MAJGEN R. G. OWENS JR.	IWAKUNI	8270	115	C2	T	2	2	2	2	C2	711001	
JAPAN (1ST MAW ELEMENTS)				5625	88									
MWHS-1		COL W. C. KELLY	IWAKUNI	663	5	C2	S	1	2	2	2	C2	711101	
7TH CIT (1ST MAW)	*	WO J. A. CANONICO		20		C1		1	1	1	1			
11TH FORCE DENTAL CO (-)		CDR J. J. LYONS (USN)		2	32	C2	R	1	1	2	1	C1	710914	
3D SSCT		CAPT G. G. MEYERS		10		C2	R	1	1	2	1	C1	711005	
MACG-18		COL E. M. JONES	IWAKUNI			C2	R	2	1	2	2	C2	711021	
H&HS-18		MAJ L. B. MYERS		178		C2	R	2	2	2	2	C2	711107	
MASS-2 (-)		LTCOL T. G. DAVIS		165		C2	R	2	1	2	2	C1	711110	
MWCS-18		MAJ R. D. WALKER JR.		280		C3	P	3	1	2	2	C2	711201	
MAG-12		COL E. J. RUTTY	IWAKUNI			C2	R	2	2	2	1	C2	711201	
H&MS-12		LTCOL K. D. CURRY JR.		546		C2	R	1	1	2	2	C2	711121	
MABS-12		LTCOL J. L. DRIEFER		359	19	C2	R	2	1	2	2	C2	711130	
MATCU-62 (MAG-12)	*	CAPT A. E. PETERS		41		C4	P	4	1	1	2	C3	711030	
VMA-211		LTCOL W. E. WILSON		195		C2	R	2	2	2	2	C2	711123	19/A-4E
VMA-311		LTCOL K. L. BATT		186	2	C2	P	2	2	2	1	C2	711002	24/A-4E
VMA(AW)-533	7	LTCOL R. P. SPRIER	NAHA	235		C2	R	2	1	2	1	C2	711202	10/A-6A
OTHER														
SU 2, H&MS-36		MAJ F. H. KELLER	FUJI	37										3/CH-46D

* PARENTHETIC UNIT INDICATES OPCON WHEN DIFFERENT FROM ORGANIZATIONAL STRUCTURE.

TAB 21- 2

[redacted]

Unclassified

UNCLASSIFIED

[redacted] UNCLASSIFIED

MARINE CORPS COMMAND CENTER

STATUS OF FMF UNITS

15 SEPTEMBER 1971

UNIT	NOTE	UNIT COMMANDER	LOCATION	STRENGTH USMC	STRENGTH USN	UNIT READINESS ☆ CURRENT RATE	RSN	P	S	R	T	EXPECTED RATE	EXPECTED BY	MAJOR EQUIPMENT
MAG-15		COL R. R. MILLER	IWAKUNI			C2	T	2	2	2	2	C2	711109	
H&MS-15		MAJ J. E. HERLOCKER		620		C2	R	1	1	2	1	C1	711001	4/TA-4F
MABS-15		MAJ R. L. BECKWITH		351	21	C2	R	2	1	2	2	C2	711028	
MATCU-60 (MAG-15)	*	CAPT D. L. HENDRIX		57		C2	P	2	1	2	2	C1	711001	
VMFA-115		LTCOL R. R. POWELL	CUBI PT.	265	1	C2	P	2	2	2	2	C2	711128	14/F-4B
VMFA-232		LTCOL J. L. GREGORCYK	IWAKUNI	295	1	C2	T	2	1	2	2	C1	711115	16/F-4J
VMCJ-1 (1ST MAW)	*	LTCOL S. S. EISENHAUER		347	1	C3	T	2	2	2	3	C2	711006	5/EA-6A, 9/RF-4B
MWSG-17		COL W. G. MCCOOL	IWAKUNI			C3	R	1	2	3	2	C2	711001	
H&MS-17		LTCOL W. R. LIMBACH		560	6	C3	R	1	2	3	2	C2	711001	5/C-117D, 3/C-54Q/R/S
WERS-17 (-)		MAJ A. L. FRUCCI		213		C2	R	1	2	2	2	C1	711110	
OKINAWA (1ST MAW ELEMENTS)				2645	27									
MAG-36		COL A. F. GARROTTO	FUTEMA			C2	R	1	2	2	1	C2	710924	
H&MS-36 (-)		LTCOL D. A. SPURLOCK		505		C2	S	1	2	2	1	C1	711201	9/CH-46D, 2/UH-1E
SU 1, H&MS-36 (-)		MAJ F. W. CRONE		52		C2	R	1	1	2	1	C1	710911	4/AH-1J
MABS-36		LTCOL V. J. GUINEE JR.		430	21	C4	P	4	1	2	2	C3	711120	
MATCU-66 (MAG-36)	*	CAPT K. R. CLARK		55		C2	P	2	1	2	2	C2	711130	
MATCU-68 (MAG-36)	*	WO L. R. COXE		16		C4	P	4	2	2	4	C4	711015	
HMM-164 (31ST MAU)	2*	LTCOL A. J. KETTERING	31ST MAU	281	3	C2	R	1	2	2	1	C1	711015	13/CH-46D, 4/CH-53D, 4/UH-1E
HMM-165		LTCOL P. L. MOREAU	FUTEMA	208		C2	P	2	2	2	1	C1	711015	20/CH-46D
HMH-462 (-)	2	LTCOL D. G. MCDONALD		235		C1		1	1	1	1			19/CH-53D
VMO-6 (-)		LTCOL J. L. NORTON		149		C1		1	1	1	1			12/OV-10A
VMGR-152 (1ST MAW)	*	LTCOL R. H. DUPHINEY		261	1	C4	R	3	4	4	4	C3	711115	6/KC-130F
HML-367 (-)		MAJ R. SANCHO		130		C2	P	2	1	1	1	C1	711001	11/UH-1E
OTHERS														
DET, MASS-2 (-)			FUTEMA											
SU 1, WERS-17 (-)	12	WO E. J. HICKS		49		C1		1	1	1	1			
SU 1, H&MS-12 (-)	27	CAPT R. D. PITTS	NAHA	47		C2	S	1	2	2	1	C1	711030	
MACS-4		LTCOL R. D. MILLER	FUTEMA	227	2	C3	T	2	1	2	3	C2	710923	
3D FSR		COL R. E. ROEDER JR.	CP FOSTER	2787	41	C3	S	2	3	3	2	C2	710915	
H&S BN		LTCOL J. B. HARRIS SR.		832	20	C3	R	2	3	3	2	C2	710915	
SUPPLY BN		LTCOL J. W. FRIBERG		1046	21	C3	S	2	3	2	2	C2	710915	
NOP, 3D FSR (3D FSR)	*	CAPT C. W. SHIVER		46		C1		1	1	1	1			
MAINT BN		LTCOL H. I. FREY		863		C3	S	2	3	3	2	C2	710915	2/LVTE-1, 1/106MM RR, 1/81 MORT
EASTPAC				29307	860									
FMFPAC														
I MAF		MAJGEN R. T. DWYER JR.	CAMPEN	21		C3	X	2	4	4	2	C2	710901	
1ST MAR DIV (-) (REIN)		MAJGEN R. T. DWYER JR.	CAMPEN	14860	569	C4	P	4	2	3	4	C4	711001	
HQBN		COL H. G. ROBINSON		1981	63	C4	P	4	2	3	4	C3	711001	
1ST CIT		CAPT B. B. VORONIN		20		C1		1	1	1	1			
5TH ITT	14	CAPT R. A. KAROLY												
9TH ITT	14	CAPT L. J. JANSEN												
19TH ITT	14	1STLT G. D. JENNINGS												
21ST ITT	14	2DLT M. M. LINCOLN												
23D ITT	14	CAPT R. D. TOMLIN												
25TH ITT	14	CAPT H. K. LEE												
2D SSCT		1STLT E. L. HANEY		9		C4	X	1	1	1	1	C3	711101	
SCAMP		CAPT A. L. SELLECK JR.		24										
COMM SPT CO, 9TH COMM BN (-)		MAJ R. R. ANDERSON		344		C2	R	1	1	2	1	C2	711101	
1ST CIVIL AFFAIRS GRP (CADRE)		CAPT R. S. GRISCHKOWSKY		22		C4	P	4	1	1	4	C4	711101	
1ST MARINES		COL E. J. BRONARS	CAMPEN			C4	S	3	4	4	3	C3	711001	
HQCO		MAJ R. A. DECKER		179	12	C4	R	1	3	4	2	C3	711110	
1ST BN		LTCOL C. A. BARSTOW		960	29	C3	R	2	2	3	3	C2	711015	8/106MM RR, 8/81 MORT
2D BN	23	LTCOL A. LUKEMAN		970	33	C4	R	2	3	4	2	C2	711101	8/106MM RR, 1/81 MORT
3D BN		LTCOL M. HUNTER		943	32	C4	S	3	4	4	3	C3	711001	8/106MM RR, 8/81 MORT

● PARENTHETIC UNIT INDICATES OPCON WHEN DIFFERENT FROM ORGANIZATIONAL STRUCTURE.

TAB 21-3

Unclassified [redacted]

UNCLASSIFIED

[redacted] UNCLASSIFIED

MARINE CORPS COMMAND CENTER

STATUS OF FMF UNITS**

15 SEPTEMBER 1971

UNIT *	NOTE	UNIT COMMANDER	LOCATION	STRENGTH USMC	STRENGTH USN	UNIT READINESS☆ CURRENT RATE	RSN	P	S	R	T	EXPECTED RATE	EXPECTED BY	MAJOR EQUIPMENT
3D BN, 3D MARINES (CADRE)		MAJ F. G. HUTCHINSON JR.	CAMPEN	105	2	C4	N	5	4	4	5			7/106MM RR, 8/81MORT
5TH MARINES		COL R. N. BURHANS	CAMPEN			C4	P	4	4	4	4	C4	711101	
HQCO		CAPT J. R. WILLIAMS		145	9	C4	S	2	4	4	4	C4	711001	
1ST BN		MAJ W. T. MACY		477	10	C4	P	4	4	4	4	C4	711001	6/81 MORT
2D BN		MAJ J. A. LINNEMANN		484	5	C4	P	4	4	4	4	C4	711101	
3D BN		CAPT M. B. DARLING		487	8	C4	P	4	4	4	4	C4	711101	
7TH MARINES	23	COL A. A. MONTI	CAMPEN			C3	P	3	1	1	3	C3	711101	
HQCO	23	1STLT P. E. HILLER		232	13	C1		1	1	1	1			
1ST BN (CADRE)		MAJ R. C. HALL		131	8	C4	N	5	1	1	5			8/106MM RR, 8/81 MORT
2D BN	23	LTCOL T. L. SULLIVAN		1088	36	C2	T	1	1	1	2	C1	711101	8/106MM RR, 8/81 MORT
3D BN	23/13	LTCOL R. J. MILLE		1077	35	C1		1	1	1	1			8/106MM RR, 8/81 MORT
11TH MARINES (-) (REIN)		COL W. R. GRUBAUGH	CAMPEN			C4	P	4	3	4	4	C4	711001	
HQ BTRY		MAJ J. A. MAGYAR		211	29	C4	P	4	3	4	4	C3	711101	6/107 MORT
1ST BN		LTCOL R. J. HENLEY		555		C4	P	4	2	4	4	C4	711001	18/105 HOW TD
2D BN (CADRE)		MAJ L. E. KOLEBER		210		C4	P	4	4	4	4	C4	711001	11/105 HOW TD
3D BN	23	MAJ W. A. HALL		506	6	C2	P	2	1	1	2	C1	711001	18/105 HOW TD
1ST MT BN (REIN)		MAJ E. R. WHITING		247	7	C3	R	2	1	3	2	C2	711101	
CO B, 9TH MT BN (-)		1STLT L. D. GEARHART		73		C2	X	3	1	1	3	C2	711001	
1ST RECON BN		MAJ C. R. DUNNING		242	7	C4	P	4	2	3	4	C4	711001	
1ST FORCE RECON CO		CAPT D. L. COOK		72	3	C4	P	4	1	2	4	C4	711001	
1ST TANK BN (REIN)	18	LTCOL H. G. EDEBOHLS		424	19	C4	P	4	2	2	4	C4	711001	5/M-51 VTR, 7/M-67 TANK, 15/M103 TANK, 25/M48 TANK
CO D, 3D TANK BN (-) (CADRE)														
1ST ENGR BN		MAJ J. T. SCHULTZ		461	6	C4	P	4	3	4	4	C4	711101	
7TH ENGR BN (-) (REIN)	11	MAJ C. N. WALL		377	13	C4	P	4	2	4	4	C4	711111	
1ST BRIDGE CO (-) (CADRE)		1STLT D. N. TAYLOR JR.		50		C4	P	4	1	4	4	C4	711001	
1ST SP BN	8	MAJ F. L. EDWARDS JR.		252	16	C4	P	4	1	2	4	C4	711001	
3D AMTRAC BN (-)	19	MAJ J. P. SENIK		357	17	C4	P	4	2	3	4	C4	711101	5/LVTE-1, 8/LVTP-5 COMM, 70/LVTP-5, 3/LVTR
1ST SERV BN (REIN)	10	COL G. K. REID		873	32	C3	P	3	1	1	3	C2	711101	
1ST SEARCHLIGHT BTRY (CADRE)								5	5	5	5			
7TH SEP BULK FUEL CO (CADRE)								5	5	5	5			
1ST MED BN		LCDR C. A. ROPER (USN)		68	70	C4	P	4	3	4	4	C4	711001	
1ST DENTAL CO		CAPT J. F. KING (USN)		4	49	C3	P	3	2	2	3	C2	711001	
FORCE TROOPS FMFPAC		BGEN P. G. GRAHAM	29 PALMS	1524	70	C4	P	4	2	2	3	C3	711001	
HQCO		MAJ R. J. LUCAS		182	5	C1		1	1	1	1			
PROV MAINT CO, 1ST FSR		MAJ N. B. WYNN		4		C4	P	4	4	4	4	C3	710915	
NOP, 1ST FSR		CAPT T. R. GERIES		48		C1		1	1	1	1			
9TH COMM BN (-)		LTCOL D. J. GARRETT		367	12	C4	P	4	1	2	3	C3	711201	
13TH CIT (FORTRPS FMFPAC)	*	1STLT C. W. WOOD		15		C1		1	1	1	1			
DET 1, 21ST DENTAL CO (-)		CAPT G. W. WALTER (USN)		2	20	C4	S	1	4	4	1	C3	711001	
1ST FAG		LTCOL R. O. GILLICK	29 PALMS	19		C4	P	4	2	2	4	C3	711001	
HQ BTRY, 1ST FAG		1STLT B. J. ROBERTS		129	9	C2	T	1	1	1	2	C1	711201	
1ST 8" HOW BTRY SP (-)		CAPT J. P. FARRELL		128		C3	T	2	1	2	3	C2	711001	1/M-51 VTR, 4/8" HOW SP
1ST 175MM GUN BTRY SP		CAPT M. T. OWENS JR.		65		C4	P	4	1	3	4	C3	711201	1/M-51 VTR, 6/175 GUN SP
3D 175MM GUN BTRY SP		CAPT D. L. ROSENBERG		83		C4	P	4	2	3	4	C3	711201	1/M-51 VTR, 6/175 GUN SP
4TH BN, 11TH MAR (1ST FAG)	*	LTCOL D. W. SANFORD		343	2	C4	P	4	2	3	4	C3	710915	1/M-51 VTR, 18/155 HOW SP
CO A (REIN), 7TH ENGR BN(-)		CAPT P. A. PANKEY	29 PALMS	120		C4	P	4	1	2	3	C3	711201	
3D HOSPITAL CO (CADRE)		LT C. E. MONTGOMERY(USN)		19	22	C4	P	4	3	3	4	C3	711001	

* PARENTHETIC UNIT INDICATES OPCON WHEN DIFFERENT FROM ORGANIZATIONAL STRUCTURE.

TAB 21-4

Unclassified [redacted]

UNCLASSIFIED

[redacted] UNCLASSIFIED

MARINE CORPS COMMAND CENTER

STATUS OF FMF UNITS **

15 SEPTEMBER 1971

UNIT *	NOTE	UNIT COMMANDER	LOCATION	STRENGTH USMC	STRENGTH USN	UNIT READINESS ☆ CURRENT RATE	RSN	P	S	R	T	EXPECTED RATE	BY	MAJOR EQUIPMENT
3D MAW		BGEN L. E. BROWN	EL TORO	11552	182	C3	T	3	2	3	3	C2	711030	
MWHS-3 (-)		LTCOL H. E. SEXTON		712	110	C1		1	1	1	1			
SU 1, MWHS-3 (-)		MAJ P. J. VOGEL		235				5	5	5	5			
6TH CIT		CAPT W. C. HOWEY		19		C1		1	1	1	1			
4TH SSCT		CAPT H. G. WHITE		10		C1		1	1	1	1			
13TH FORCE DENTAL CO		CAPT J. R. EVANS (USN)	EL TORO		40	C4	P	4	1	1	1	C3	710915	
MWSG-37		LTCOL F. R. SMOKE	EL TORO			C3	X	4	3	3	3	C2	711001	
H&MS-37 (-)		MAJ L. K. WARN		533		C3	P	3	2	2	2	C3	720101	5/C-117D, 1/C-54Q
SU 1, H&MS-37 (-)		MAJ L. C. WALLACE JR.		53		C2	P	2	1	1	1	C1	720101	
WERS-37		LTCOL M. PALLAI		214		C3	P	3	2	2	2	C3	720101	
VMGR-352 (3D MAW)	*	LTCOL G. L. CARLSON		270	1	C3	X	4	3	4	4	C3	720101	8/KC-130F
MACG-38		COL J. W. DRURY	EL TORO			C3	P	3	2	2	3	C2	711130	
H&HS-38 (-)		MAJ D. T. WILSON		242	1	C2	R	1	2	2	2	C1	710930	
SU 1, H&HS-38 (-)		MAJ E. D. CHANEY		67		C3	T	2	2	2	3	C2	710930	
1ST REDEYE PLAT		1STLT R. E. HAMANN		33		C2	R	2	1	2	1	C1	711001	
3D REDEYE PLAT		1STLT J. B. DOWLING		31		C2	R	2	1	2	1	C1	711001	
2D LAAM BN		LTCOL R. D. FOSTER	YUMA	640	3	C3	T	3	1	2	3	C1	711001	
MACS-7		LTCOL J. O. GREGERSON	CAMPEN	205		C2	X	4	2	3	4	C3	711001	
MACS-1 (-)		MAJ W. H. ALLEN	YUMA	206	2	C3	P	3	1	2	3	C2	711001	
SU 1, MACS-1 (-) (NWU)		CAPT H. POSTHUMA		61		C1		1	1	1	1			
MWCS-38		MAJ W. T. CHWATEK	EL TORO	251		C4	P	4	3	3	1	C3	711101	
MASS-3		MAJ V. J. FULLADOSA		166		C3	P	3	1	3	3	C2	711030	
MAG-11		COL L. J. STIEN	EL TORO			C4	P	4	4	4	4	C3	711101	
H&MS-11		LTCOL L. N. LEVIN		469		C4	P	2	4	4	2	C2	710915	
MABS-11		LTCOL N. E. DOUGLAS		343		C4	R	1	1	4	4	C3	711001	
VMFA-314 (CADRE)		MAJ A. G. BARTEL		64		C4	P	4	4	3	4		720101	3/F-4B
VMFA-323		MAJ T. G. LEACH		222		C4	P	4	1	3	4	C3	710930	15/F-4B
VMFA-334 (CADRE)		CAPT S. P. HUEY		1		C4	N	4	4	4	4			
VMFA-531		LTCOL R. HUTCHINSON		232		C2	X	3	2	1	3	C2	710930	14/F-4B
MAG-13		COL D. R. DAVIS	EL TORO			C4	T	4	3	4	4	C3	710930	
H&MS-13		LTCOL C. C. NEWMARK		771	1	C2	P	2	1	1	2	C1	710930	13/A-6A, 8/F-4B, 5/TA-4F
MABS-13		MAJ J. DERMODY		496	2	C2	P	2	2	1	1	C2	710930	
MATCU-65 (MAG-13)	*	CAPT D. M. TARBET	YUMA	40		C3	X	4	1	1	3	C4	711001	
MATCU-67 (MAG-13)	*	CAPT J. HANCOCK	EL TORO	49		C4	S	3	4	3	3	C3	710930	
MATCU-77 (CADRE) (MAG-13)	*							5	5	5	5			
VMA-214		LTCOL J. J. MCCARTHY		184		C2	X	3	2	2	3	C2	711030	16/A-4F
VMA-223		MAJ A. OSEGUERA		187		C4	P	4	3	4	3	C3	711231	13/A-4F
VMA(AW)-225 (CADRE)		MAJ R. C. TINSLEY		16		C4	N	5	4	4	5			
VMA(AW)-242		LTCOL M. S. NEWBILL		208	1	C4	R	3	3	4	3	C3	711013	6/A-6A
VMCJ-3		LTCOL M. W. DINNAGE		316		C4	P	4	1	2	3	C3	711220	10/RF-4B, 2/EA-6A
MAG-16		COL G. L. LILLICH	SANTA ANA			C3	P	3	2	2	2	C2	711231	
H&MS-16 (-)		MAJ H. W. HINTZ		405		C2	R	1	1	2	2	C1	711231	18/CH-46D, 14/CH-53A, 6/UH-1E, 7/OV-10A
SU 1, H&MS-16 (-)		MAJ G. W. LEE	CAMPEN	135		C1		1	1	1	1			
MABS-16		MAJ B. G. WILKISON	SANTA ANA	500		C3	P	3	2	2	2	C2	711231	
MATCU-74 (H&MS-16 (-))	*	CAPT G. V. BROWN		51		C3	P	3	1	2	2	C2	711231	
MATCU-75 (H&MS-16 (-))	*	CAPT P. D. HAYNES	CAMPEN	35		C4	P	4	2	2	3	C3	711231	
HML-267		LTCOL J. M. MORIARTY		317	9	C3	R	2	2	3	2	C2	711231	21/UH-1E, 9/OV-10A
VMO-2 (CADRE)		MAJ D. A. CAYLOR		2		C4	N	5	4	4	5	C3	711231	
HMM-161		LTCOL G. H. DUNN	SANTA ANA	192		C3	P	3	2	2	2	C2	711231	19/CH-46D
HMM-163		LTCOL F. A. MATHEWS		202	1	C2	P	2	1	1	1	C1	711231	21/CH-46F
HMH-361		MAJ R. P. CAPTOR		166		C4	P	4	3	3	4	C3	711231	12/CH-53A
HMH-363		LTCOL A. F. RIBBECK		191		C2	X	3	3	2	3	C2	711231	18/CH-53A

* PARENTHETIC UNIT INDICATES OPCON WHEN DIFFERENT FROM ORGANIZATIONAL STRUCTURE.

TAB 21-5

[redacted]

Unclassified

UNCLASSIFIED

[redacted] UNCLASSIFIED

MARINE CORPS COMMAND CENTER

STATUS OF FMF UNITS

15 SEPTEMBER 1971

UNIT *	NOTE	UNIT COMMANDER	LOCATION	STRENGTH USMC	STRENGTH USN	UNIT READINESS ★ CURRENT RATE	RSN	P	S	R	T	EXPECTED RATE	EXPECTED BY	MAJOR EQUIPMENT
MHTG-30		COL R. BIANCHI	SANTA ANA			C1		1	1	1	1			
H&MS-30		MAJ D. G. DUNLAP		298	1	C1		1	1	1	1			6/CH-46F, 2/CH-53A
HMHT-301		MAJ D. A. DALRYMPLE		159		C1		1	1	1	1			9/CH-53A
HMHT-302		LTCOL R. G. RITCHIE		172		C1		1	1	1	1			16/CH-46F
MCCRTG-10		COL R. B. SINCLAIR	YUMA			C2	P	2	2	2	1	C2	711130	
H&MS-10		MAJ G. R. CALLISON		412	5	C1		1	1	1	1			
VMFAT-101		LTCOL T. R. MOORE		336		C3	P	3	2	2	3	C2	711231	23/F-4B
VMAT-102		LTCOL R. D. REID		267	2	C3	P	3	3	2	1	C2	711231	24/A-4E
VMT-103		MAJ G. L. ELLIS		206	4	C3	S	3	2	2	1	C2	711202	13/TA-4F, 5/TA-4J
1ST FSR		COL H. C. REED	CAMPEN	1350	39	C3	P	3	2	2	3	C2	711001	
H&SBN		MAJ R. E. JOHNSON		521	18	C3	P	3	2	2	3	C2	711001	
SUPPLY BN		MAJ R. J. WEBB		679	21	C2	P	2	2	2	2	C1	711001	
MAINT BN		MAJ A. A. MCVITTY		617		C3	P	3	2	2	3	C2	711001	
EAST COAST														
FMFLANT		LTGEN E. E. ANDERSON	NORFOLK	38261	1022	C1		1	1	1	1			
HQ FMFLANT				806	4									
H&SBN		COL L. H. EVINE		726	4	C2	P	2	1	1	2	C1	711001	
HQ SUDN		LTCOL D. PRUDHOMME		80		C2	X	4	2	1	1	C1	710901	1/C-131F, 1/C-54T, 2/T-28B, 1/UH-34D, 1/US-2A, 2/US-2B
2D MAR DIV		BGEN R. D. BOHN	CAMLEJ	15692	657	C3	X	2	1	1	2	C2	711031	
HQBN		COL G. R. HERSHEY		1770	37	C2	R	1	1	2	1	C1	711031	
2D ITT	20	WO G. L. ANDERSON												
4TH ITT	20	2DLT R. L. LAMBERT												
6TH ITT	20	MSGT R. L. GONYO												
SCAMP	20													
5TH SSCT		WO D. J. BROWN												
2D MARINES		COL C. B. REIMAN	CAMLEJ			C2	P	2	1	1	2	C1	711130	
HQCO		CAPT G. W. SCHLITZ		255	5	C3		1	1	1	2	C2	711130	
1ST BN	13	LTCOL A. M. GRAY		1149	36	C2	T	1	1	2	2	C1	710915	8/106MM RR, 8/81 MORT
2D BN	15	LTCOL M. ROJO JR.		974	18	C3	T	2	1	1	3	C2	710930	8/106MM RR, 8/81 MORT
3D BN (-) (32D MAU)	5*	LTCOL T. J. WILLIS	MED	939	32	C1		1	1	1	1			8/106MM RR, 8/81 MORT
SU 1, H&SCO, 3D BN (2D MAR)	*	1STLT J. R. LOMEY	CAMLEJ	22		C4	N	5	5	5	5			
6TH MARINES		COL F. R. KRAINCE	CAMLEJ			C2	P	2	1	1	2	C1	711130	
HQCO		CAPT R. J. SNOWDEN		301	6	C2		1	1	2	1	C1	710930	
1ST BN	6	LTCOL T. F. QUALLS	CARIB	921	33	C2	P	2	1	1	1	C1	710930	8/106MM RR, 8/81 MORT
2D BN		LTCOL J. T. ENOCH	CAMLEJ	1013	19	C2	T	2	1	1	2	C2	711130	8/106MM RR, 8/81 MORT
3D BN		LTCOL C. F. PITCHFORD		992	34	C2	P	2	1	1	2	C2	711130	8/106MM RR, 8/81 MORT
8TH MARINES		COL E. M. YOUNG	CAMLEJ			C2	P	2	1	1	2	C2	711130	
HQCO		CAPT H. L. SAWYER		264	5	C1		1	1	1	1			
1ST BN		LTCOL J. K. COODY		993	20	C2	P	2	1	1	2	C2	711130	8/106MM RR, 8/81 MORT
2D BN (-) (REIN)	9	LTCOL B. S. PICKETT	GTMO	650	24	C2	P	2	1	1	1	C2	711130	8/106MM RR, 8/81 MORT
CO E, 2D BN		1STLT H. R. WEHUNT	CAMLEJ	181	2	C4	N	5	5	5	5			
3D BN		MAJ J. T. BOWLIN		972	17	C2	P	2	1	1	2	C2	711130	8/106MM RR, 8/81 MORT
10TH MARINES		COL C. R. BURROUGHS	CAMLEJ			C4	P	4	1	1	2	C3	710930	
HQ BTRY		1STLT R. R. HARRIS		232	7	C2	R	1	1	2	1	C1	711130	
1ST BN		LTCOL J. A. LIVINGSTONE		333	10	C3	P	3	1	1	2	C2	711130	18/105 HOW TD
2D BN		MAJ J. H. ROSS		354	10	C3	P	3	1	1	2	C2	711130	18/105 HOW TD
3D BN		LTCOL R. F. MOODY		391	11	C4	P	4	1	1	2	C3	710930	18/105 HOW TD
4TH BN		LTCOL R. F. BELLI		256	7	C4	P	4	1	1	2	C3	710930	1/M-51 VTR, 18/105 HOW SP

* PARENTHETIC UNIT INDICATES OPCON WHEN DIFFERENT FROM ORGANIZATIONAL STRUCTURE.

TAB 21-6

[redacted] Unclassified

UNCLASSIFIED

[redacted] UNCLASSIFIED

MARINE CORPS COMMAND CENTER

STATUS OF FMF UNITS **

15 SEPTEMBER 1971

UNIT *	NOTE	UNIT COMMANDER	LOCATION	STRENGTH USMC	STRENGTH USN	UNIT READINESS ☆ CURRENT RATE	RSN	P	S	R	T	EXPECTED RATE	BY	MAJOR EQUIPMENT
2D SERV BN		COL S. DAVIS	CAMLEJ	897	35	C2	P	2	1	1	2	C1	711130	
2D MT BN		LTCOL W. S. JERICHTEN		268	7	C1		1	1	1	1			
2D ENGR BN		MAJ W. W. WIDENER		585	8	C3	P	3	1	1	3	C2	710930	
2D RECON BN		MAJ G. E. STRICKLAND		421	14	C2	P	2	1	2	2	C2	711130	
2D SP BN		MAJ R . . KENWORTHY		423	14	C2	P	2	1	2	2	C1	711130	
2D MED BN		CDR P. S. O'HALLORAN (USN)		136	184	C4	P	4	2	2	2	C3	711130	
2D DENTAL CO		CAPT A.P.GIAMMISSO(USN)			62	C2	T	1	1	1	2	C1	710930	
FORTPS, FMFLANT		BGEN J. C. FEGAN	CAMLEJ	5117	135	C3	P	3	1	1	2	C3	711101	
HQCO		MAJ R. M. OTTERAAEN		468		C1		1	1	1	1			
2D CIT		1STLT R. H. OSBON JR.		17		C1		1	1	1	1			
5TH CIT		CAPT W. A. BROWN		11		C4	P	4	1	1	1	C4	711201	
2D FAG		COL W. W. HIXSON	CAMLEJ			C3	P	3	1	1	3	C2	711015	
HQ BTRY, 2D FAG		CAPT D. J. JORDAN		156	5	C1		1	1	1	1			
2D 8" HOW BTRY SP		MAJ G. C. ROSS		139		C4	P	4	1	1	3	C2	711001	1/M51 VTR, 6/8" HOW SP
2D 175MM GUN BTRY		CAPT . A. BOZANICH		101		C3	P	3	1	1	3	C2	711012	1/M51 VTR, 6/155 GUN SP, 6/175 GUN SP
5TH 175MM GUN BTRY SP		MAJ R. R. WRIGHT		109		C3	X	4	1	1	4	C2	711030	1/M51 VTR, 6/175 GUN SP
2D TANK BN (-)	25	LTCOL F. E. GRUBE	CAMLEJ	673	10	C3	P	3	1	1	3	C2	711001	17/M103 TK, 55/M48 TK, 5/M51 VTR, 9/M67 TK
2D AMTRAC BN (-)	21	LTCOL R. A. SULIK		763	13	C3	P	3	1	2	3	C1	711101	5/LVTE-1, 12/LVTP-5 COMD, 144/LVTP-5, 4/LVTR
8TH COMM BN		LTCOL R. E. HAISLIP		592	10	C3	P	3	1	2	2	C3	711201	
8TH ENGR BN		LTCOL B. A. KAASMANN		692	13	C4	P	4	1	1	3	C4	711201	
8TH MT BN		LTCOL C. F. SIMERY		359	4	C2	P	2	1	1	2	C2	710914	
2D RADIO BN (-)	29	LTCOL J. T. BRASSFIELD		392	4	C3	P	3	1	2	2	C2	711030	
2D ANGLICO		LTCOL D. E. SCHNEIDER		266	8	C3	P	3	1	2	3	C2	711030	
2D FORCE RECON CO		CAPT A. G. LITTLE		125	2	C3	T	2	1	1	3	C2	710930	
2D TOPO CO		MAJ J. F. MCGRORY		80	1	C3	P	3	1	1	3	C2	710925	
2D BRIDGE CO		1STLT D. C. BELL		141	2	C4	T	3	1	1	4	C3	711101	
2D HOSPITAL CO		CDR D. W. HOPPING (USN)		26	16	C4	P	4	1	1	4	C3	711201	
22D DENTAL CO		CAPT W.H.HAGERMAN (USN)		4	33	C4	P	4	1	1	1	C2	711201	
2D SEP SURG CO (CAIRE)		LCDR G. H. ASHTON (USN)		3	14	C4	N	5	5	5	5			
9TH SEP BULK FUEL CO(CAIRE)														
2D MAW		MAJGEN G. C. AXTELL	CHERPT	14605	203	C2	X	2	2	2	3	C2	710930	
MWHS-2		COL D. G. SWINFORD		662	21	C1		1	1	1	1			
12TH FORCE DENTAL CO		CAPT J. H. SMITH (USN)		2	52	C3	P	3	1	1	1	C1	711001	
8TH CIT		WO E. J. JOHNSTON		17		C1		1	1	1	1			
6TH SSCT		1STLT V. E. STROTE		7		C2	R	1	1	2	1	C1	711001	
MATCU-78 (FMFLANT)	*	CAPT A. E. DAVIS	QUANTICO	53		C4	T	3	1	2	4	C4	711101	
MWSG-27		LTCOL W. L. RICE	CHERPT			C3	P	3	1	2	2	C3	711015	
H&MS-27 (-)		LTCOL E. J. HEISE		702	11	C2	P	2	1	1	2	C1	711209	5/C-117D, 1/C-54S
SU 1, H&MS-27 (-)		CAPT K. D. MCCURRY		41		C1		1	1	1	1			
WERS-27		MAJ R. C. BAGLEY JR.		196		C3	P	3	1	1	2	C2	711208	
VMGR-252 (2D MAW)	*	LTCOL M. V. STATZER		347	2	C3	X	2	2	3	4	C3	711201	10/KC-130F
MACG-28		LTCOL A. F. MCCALEB JR.	CHERPT			C3	P	3	2	2	2	C2	711022	
H&HS-28		MAJ E. S. . LIN		228	3	C2	T	2	1	1	2	C2	711022	
MASS-1		MAJ H. F. SAEGER		211	1	C3	P	3	1	1	2	C2	710930	
2D REDEYE PLAT		1STLT A. W. HEATH		41		C2	P	2	1	1	2	C2	710930	
MACS-5		MAJ B. W. DRISCOLL	BEAUFORT	199		C3	P	3	2	2	2	C2	711001	
MACS-6		MAJ A. M. YOUNGER	CHERPT	239		C3	T	2	2	2	3	C3	711001	
3D LAAM BN		LTCOL J. C. DIXON		515	5	C3	P	3	2	2	2	C3	710921	
MMCS-28		MAJ L. J. MITCHELL		230		C4	P	4	2	2	3	C4	710920	
MCCRTG-20		COL R. D. WALLACE	CHERPT			C3	T	1	1	2	3	C2	711031	
H&MS-20		LTCOL V. P. HART JR.		642		C2	X	1	1	2	3	C1	711001	
VMFAT-201		LTCOL R. H. SCHULTZ		342		C3	X	3	1	1	4	C3	710915	4/F-4B, 29/F-4J
VMAT(AW)-202		LTCOL C. G. LAWSON		338		C4	R	1	2	4	1	C3	710915	13/A-6A, 3/TC-4C
VMT-203		LTCOL S. M. WILLIAMS		196		C3	T	2	1	1	3	C2	711031	17/TA-4F, 5/TA-4J

* PARENTHETIC UNIT INDICATES OPCON WHEN DIFFERENT FROM ORGANIZATIONAL STRUCTURE.

TAB 21-7

[redacted]

Unclassified

UNCLASSIFIED

[redacted]

UNCLASSIFIED

MARINE CORPS COMMAND CENTER

STATUS OF FMF UNITS **

15 SEPTEMBER 1971

UNIT *	NOTE	UNIT COMMANDER	LOCATION	STRENGTH USMC	STRENGTH USN	UNIT READINESS ☆ CURRENT RATE	RSN	P	S	R	T	EXPECTED RATE	EXPECTED BY	MAJOR EQUIPMENT
MHTG-40		COL R. B. ENGESSER	NEW RIVER			C1		1	1	1	1			
H&MS-40		MAJ J. P. KIZER		253	1	C1		1	1	1	1			
HMMT-401		LTCOL H. D. GRESS JR.		119		C1	X	1	1	1	1	C2	711201	12/CH-53D
HMMT-402		LTCOL W. R. FAILS		154		C1		1	1	1	1			19/CH-46F
MAG-14		COL W. R. NOWADNICK	CHERPT			C1	X	3	1	3	4	C3	711031	
H&MS-14		LTCOL R. K. SLACK		705		C2	P	2	1	1	2	C2	711001	1/A-6A, 3/EA-6A, 2/F-4B, 4/TA-4F
MABS-14 (-)		MAJ C. M. DOYLE		297	10	C3	P	3	1	2	1	C3	711031	
SU 1, MABS-14 (-)		MAJ B. L. MEEK	BOGUE, NC	223		C1		1	1	1	1			
MATCU-61		CAPT G. P. HAYES		54		C4	P	4	1	4	2	C2	710926	
VMCJ-2 (-)		LTCOL A. W. REALSEN	CHERPT	355	4	C3	R	1	1	3	3	C2	711124	7/EA-6A, 9/RF-4B
DET A, VMCJ-2 (6THFLT)	16*	MAJ R. C. CONWAY	USS SARATOGA	143	1	C1		1	1	1	1			4/EA-6A
VMA(AW)-121		MAJ E. A. BIRZER	CHERPT	218	3	C4	T	2	1	2	4	C3	710930	11/A-6A
VMA(AW)-224 (COM CVW-15)	31*	LTCOL B. R. STANDLEY	USS CORAL SEA	290	7	C2	R	1	1	2	1	C1	710911	12/A-6A
VMA(AW)-332		LTCOL C. L. COMFORT	CHERPT	208	2	C3	T	1	1	2	3	C2	710930	10/A-6A
VMFA-312		MAJ R. G. KROPP		185		C4	P	4	2	4	4	C4	711101	14/F-4B
DET 14, 2D MAW (NAS, KEY WEST)	*		KEY WEST	84		C1		1	1	1	1			5/F-4B
MAG-26		COL G. R. HUNTER	NEW RIVER			C3	R	2	2	3	3	C2	711020	
H&MS-26		MAJ C. E. CANNON		571		C2	X	1	1	1	1	C2	711016	31/CH-46F, 17/CH-53A, 11/CH-53D
MABS-26		MAJ Z. V. LAMASCUS		489	38	C3	X	4	1	1	1	C4	711101	
MATCU-64 (MAG-26)	*	CAPT D. V. ESMOND		53		C4	P	4	1	2	3	C3	710915	
VMO-1		LTCOL J. D. PIERCE		183		C2	R	1	2	2	1	C3	711028	17/OV-10A
HMA-269		LTCOL L. W. SMITH		147		C4	T	4	1	1	4	C2	711101	18/AH-1J
HML-167		LTCOL H. S. LOWREY JR.		194		C4	S	4	4	4	4	C3	711001	5/UH-1E, 6/UH-1N
HMM-162 (32D MAU)	5*	LTCOL J. W. ALBER	32D MAU	237	3	C1	X	1	1	2	1	C1	711015	12/CH-46F, 4/CH-53D, 2/UH-1E
HMM-261		MAJ D. R. ALLEN JR.	NEW RIVER	255		C2	R	1	1	2	1	C1	710923	21/CH-46F
HMM-263		LTCOL V. M. HAZELBAKER	QUANTICO	100		C4	P	4	4	4	4	C3	710915	20/CH-46D, 12/CH46F
HMM-264		MAJ R. K. GOFORTH	NEW RIVER	273		C1		1	1	1	1			19/CH-46F, 4/CH-53D, 4/AH-1J, 4/UH-1N
HMH-362		MAJ R. F. WILEY		164		C2	R	1	1	2	1	C1	711027	17/CH-53D
HMH-461		LTCOL D. E. WEBB		151		C4	R	2	1	4	2	C3	711003	4/CH-53A, 12/CH-53D
MAG-31		COL N. B. MCCRARY	BEAUFORT			C2	X	3	1	2	3	C2	710930	
H&MS-31		LTCOL J. K. COCHRAN		641		C2	R	2	2	2	2	C2	711031	1/C-117D, 2/F-4B, 3/F-4J, 3/TA-4F
MABS-31		MAJ J. L. CUNNINGHAM		338	18	C3	P	3	1	1	3	C3	711103	
MATCU-69		CAPT W. T. FARROW		39		C4	P	4	1	2	4	C4	710925	
VMFA-251		MAJ R. P. LEE		261	1	C2	X	2	1	2	3	C2	711001	5/F-4B, 11/F-4J
VMFA-333 (CVA-66)	3*	LTCOL R. PLANT	USS AMERICA	303	1	C2	S	1	2	1	1	C1	711231	12/F-4J
VMFA-451		LTCOL R. J. WEISS	BEAUFORT	281		C2	X	2	1	2	3	C2	710930	15/F-4J
MAG-32		COL I. L. MORGAN	BEAUFORT			C2	X	3	2	2	3	C2	710930	
H&MS-32		MAJ R. L. UPCHURCH		502		C2	X	3	2	2	2	C2	710901	1/C-117D, 5/TA-4F
MABS-32		MAJ H. R. PALMATEER		379	17	C2	X	3	2	2	1	C2	711113	
MATCU-63		1STLT M. M. HENDERSON		32		C3	X	4	2	2	1	C3	711224	
VMA-324		LTCOL G. J. ERTLMEIER		170	1	C2	T	2	1	1	2	C2	710930	4/A-4E, 19/A-4M
VMA-331		LTCOL P. E. BROOKSHIRE		193		C4	T	2	1	2	4	C3	720101	20/A-4E
VMA-513		LTCOL C. M. BAKER		153	1	C4	T	4	4	2	4	C4	711109	7/AV-8A
2D FSR		COL R. G. EYKYN	CAMLEJ	2041	23	C3	P	3	1	1	3	C4	711101	
H&SBN		LTCOL J. B. CANTIENY		602	15	C3	P	3	1	1	3	C2	711101	
SUPPLY BN		LTCOL J. F. FORHAN		721	8	C4	P	4	1	1	4	C4	711001	
MAINT BN		MAJ P. S. GALLIGAN		718		C3	P	3	1	1	3	C4	711001	3/LVTR, 2/M51 VTR

* PARENTHETIC UNIT INDICATES OPCON WHEN DIFFERENT FROM ORGANIZATIONAL STRUCTURE.

TAB 21-8

[redacted]

Unclassified

UNCLASSIFIED

[redacted]

UNCLASSIFIED

MARINE CORPS COMMAND CENTER

STATUS OF FMF UNITS**

15 SEPTEMBER 1971

UNIT	NOTE	UNIT COMMANDER	LOCATION	STRENGTH		UNIT READINESS☆								MAJOR EQUIPMENT
						CURRENT						EXPECTED		
				USMC	USN	RATE	RSN	P	S	R	T	RATE	BY	

☆ UNIT READINESS RATING CATEGORY

C-1 FULLY COMBAT READY
C-2 SUBSTANTIALLY COMBAT READY
C-3 MARGINALLY COMBAT READY
C-4 NOT COMBAT READY

☆ READINESS ABBREVIATIONS

P PERSONNEL READINESS
S SUPPLIES/EQUIPMENT ON HAND
R EQUIPMENT READINESS
T TRAINING READINESS
X COMMANDERS SUBJECTIVE JUDGEMENT
N RESOURCE ALLOCATION BY COGNIZANT SERVICE DOES NOT PERMIT A HIGHER C-RATING

NOTES

1. BLT 1/4 BREAKDOWN ON TAB 34.
2. 31ST MAU BREAKDOWN ON TAB 34.
3. ABOARD USS AMERICA (CVA-66).
4. ASSIGNED III MAF
5. LANFOR6THFLT 1-71 (32D MAU) BREAKDOWN ON TAB 36.
6. LANFORCARIB 1-71 BREAKDOWN ON TAB 36.
7. VMA(AW)-533 (w/10 A-6A AIRCRAFT) AT NAHA, OKINAWA, FOR TRAINING DURING THE PERIOD 16AUG-15OCT71.
8. H&SCO, CO B, 1ST SP BN IN CADRE STATUS.
9. GTMO BN (REIN) BREAKDOWN ON TAB 36-2.
10. TRUCK CO, 1ST SERV BN (CADRE).
11. CO C, 7TH ENGR BN (CADRE).
12. THIS UNIT IS BOTH ADCON/OPCON TO WERS-17 (-).
13. AIR ALERT BATTALION.
14. PERSONNEL AND EQUIPMENT CARRIED IN HQBN, 1ST MARDIV.
15. VIEQUES TRNG (DET, H&SCO, CO F, 2/2).
16. ABOARD USS SARATOGA (CVA-60).
17. INCLUDES STRENGTH CO D, 7TH ENGR BN AND 1ST PLAT, 1ST BRIDGE CO.
18. H&SCO, CO B, CO C, AND CO D, 1ST TANK BN (CADRE).
19. H&SCO, CO B, AND CO C, 3D AMTRAC BN (CADRE).
20. PERSONNEL AND EQUIPMENT CARRIED IN HQBN, 2D MARDIV.
21. ONE PLATOON IS DEPLOYED WITH LANFOR6THFLT 1-71 AND ALSO ONE PLATOON WTIH LANFORCARIB 1-71.
22. PERSONNEL AND EQUIPMENT CARRIED IN HQBN, 3D MARDIV.
23. PARTICIPATING IN ROPEVAL 3-71 AT CAMPEN DURING THE PERIOD 8-17SEP71. OPCON TO 7TH MAB.
24. UNASSIGNED.
25. ONE PLATOON IS DEPLOYED WITH LANFOR6THFLT 1-71, ONE PLATOON WITH LANFORCARIB 1-71 AND ONE PLATOON WITH THE GTMO BN.
26. UNASSIGNED.
27. THIS UNIT IS BOTH ADCON/OPCON TO MAG-12, HOWEVER, IS PHYSICALLY LOCATED ON OKINAWA WITH THEIR STRENGTH CARRIED UNDER OKINAWA.
28. UNASSIGNED.
29. TWO OFF & 32 ENL DEPLOYED TO MOROCCO & 1 OFF & 10 ENL DEPLOYED TO GTMO ON A PERMANENT BASIS.
30. BLT 3/4 (3D BN, 4TH MAR, AND BTRY I (REIN), 3D BN, 12TH MAR) AT FUJI FOR TRAINING DURING THE PERIOD 18AUG-10CT71.
31. ABOARD USS CORAL SEA (CVA-43).

** SOURCE: MARES FORSTAT REPORT DATED 7 SEPTEMBER 1971.

TAB 21-9

UNCLASSIFIED

Unclassified

[redacted]

MARINE CORPS COMMAND CENTER

UNCLASSIFIED

RECAPITULATION OF FMF ACTUAL STRENGTHS *

FMF

15 SEPTEMBER 1971

UNIT	GROUND		AIR		GRAND TOTAL	
	USMC	USN	USMC	USN	USMC	USN
FMF	61,844	2,299	36,293	561	98,137	2,833

[redacted]

PACIFIC

FMFPAC	38,268	1,480	21,608	358	59,876	1,811
MIDPAC	3,799	132	1,786	34	5,585	166
HQ, FMFPAC	997	35	57		1,054	35
1ST MARBDE	2,081	82	1,729	34	3,810	116
OTHERS	721	15			721	15
WESTPAC (III MAF)	16,714	670	8,270	115	24,984	785
III MAF (OKINAWA)	16,714	670	2,645	27	19,359	697
HQ, III MAF	131				131	
3D MARDIV (-) (REIN)	13,796	629			13,796	629
1ST MAW			2,645	27	2,645	27
3D FSR	2,787	41			2,787	41
III MAF (JAPAN)			5,625	88	5,625	88
1ST MAW			5,625	88	5,625	88
(1) LANFOR 7TH FLT	2,905	134	342	3	3,247	137
31ST MAU	1,432	69	342	3	1,774	72
BLT 1/4	1,473	65			1,473	65
EASTPAC	17,755	678	11,552	182	29,307	860
HQ, I MAF	21				21	
1ST MARDIV (-) (REIN)	14,860	569			14,860	569
FORTRPS FMFPAC	1,524	70			1,524	70
3D MAW			11,552	182	11,552	182
1ST FSR	1,350	39			1,350	39

ATLANTIC

FMFLANT	23,576	819	14,685	203	38,261	1,022
EAST COAST	23,576	819	14,685	203	38,261	1,022
HQ, FMFLANT	726	4	80		806	4
2D MARDIV	15,692	657			15,692	657
FORTRPS FMFLANT	5,117	135			5,117	135
2D MAW			14,605	203	14,605	203
2D FSR	2,041	23			2,041	23
(2) CARIBBEAN	2,201	79			2,201	79
GTMO BN (-) (REIN)	928	31			928	31
LANFORCARIB 1-71	1,273	48			1,273	48
(2) MEDITERRANEAN	1,454	65	684	5	2,138	70
LANFORSIXTHFLT 1-71 (32D MAU)	1,454	65	238	3	1,692	68
DET A, VMCJ-2			143	1	143	1
VMFA-333			303	1	303	1

NOTES:
(1) STRENGTH INCLUDED IN III MAF (OKINAWA).
(2) STRENGTH INCLUDED IN EAST COAST.

* SOURCE: MARES FORSTAT REPORT DATED 7 SEPTEMBER 1971.

UNCLASSIFIED

Unclassified

[redacted]

TAB 22

[redacted]

MARINE CORPS COMMAND CENTER

UNCLASSIFIED

DISTRIBUTION OF MAJOR GROUND EQUIPMENT AND AIRCRAFT*

GROUND EQUIPMENT

15 SEPTEMBER 1971

EQUIPMENT		NOTE	TOTAL EQUIP	JAPAN	OKI	7TH FLT MAU s	MID PAC	CAM PEN	29 PALMS			CAM LEJ	GTMO	6TH FLT MAU s	CARIB	OTHER
81MM MORTAR	M29	8	194	8	20	16	16	62				48	8	8	8	
106MM RR	M40A1C	8	179	8	19	16	16	47				48	8	8	8	
107MM	M30		6					6								
105MM HOW TD	M101A	8	161	6	18	12	24	47				48		6		
155MM HOW TD	M114A1		18		18											
155MM HOW SP	M109		54		18				18			18				
155MM GUN SP	M53		18						12			6				
175MM GUN SP			24						12			12				
8" HOW SP	M110		12		2				4			6				
90MM GUN TANK	M48		133		43	10		25				43	7	5		
120MM GUN TANK	M-103		32					15				12	5			
FLAME TANK	M-67		24		8			7				7	2			
VTR	M-51		23		6			5	4			8				
LVTR	M-51		11		3		1	3				4				
LVTP-5 COMD			32		7	2	3	8				11		1		
LVTP-5			342		64	20	44	70				134		10		
LVTE-1			18		8			5				5				

AIRCRAFT

AIRCRAFT	NOTE	TOTAL A/C	JAPAN	OKI	7TH FLT MAU s	MID PAC	EL TORO	SANTA ANA	YUMA	CH PT	BEAU	NEW RIVER	6TH FLT MAU s	CARIB	OTHER
FIXED WING															
C-117D		18	5			1	5			5	2				
KC-130F		24		6			8			10					
C-131F	7	1													1
C-54P/Q/R/S/T	7	6	3				1			1					1
TA-4F		53	4			2	5		13	21	8				
TA-4J		10							5	5					
TC-4C		3								3					
T-28B	7	7				5									2
AV-8A		7									7				
A-6A	4/9	78	2	10			19			35					12
EA-6A	1	21	5				2			10					4
RF-4B		26	9				10			7					
F-4B	3	118	14			7	40		23	22	7				5
F-4J	5	118	16			29				29	32				12
A-4E		88	43						24		21				
A-4F		29					29								
A-4M		19									19				
OV-10A	2	48		12		3		7				17			9
US-2A	7	1													1
US-2B	7	2				1									1
HELICOPTERS															
UH-1E	2	59		13	4	8		6				5	2		21
UH-1N		10										10			
AH-1G															
AH-1J		26		4								22			
CH-46D	6	132	3	29	13	30		37							20
CH-46F	6	157						43				90	12		12
CH-53A		76						55				19	2		
CH-53D		92		19	4	9						56	4		
VH-34D		1				1									
UH-34D	7	3				2									1

NOTES:
1. DET, VMCJ-2 ABOARD USS SARATOGA (CVA-60) IN "OTHER" (4/EA-6A A/C ASSIGNED). AFLOAT MED.
2. AT CAMPEN IN "OTHER".
3. AT KEY WEST IN "OTHER".
4. AT NAHA, OKINAWA, FOR TRAINING (16AUG-15OCT71).
5. ABOARD USS AMERICA (CVA-66)(VMFA-333)(12/F-4J) IN "OTHER".
6. AT QUANTICO IN "OTHER".
7. AT FMFLANT, NORFOLK, VA. IN 'OTHER".
8. AT FUJI TRAINING, BLT 3/4 AND BTRY "I" (REIN), 3D BN, 12TH MAR.
9. ABOARD USS CORAL SEA (CVA-43) (VMA(AW)-224)(12/A-6A) IN "OTHER".

UNCLASSIFIED

Unclassified

*SOURCE: MARES FORSTAT REP[illegible] 1971.

[redacted]

TAB-23

UNCL[redacted]

MARINE CORPS COMMAND CENTER

FLEET MARINE FORCE DISPOSITION

15 SEPTEMBER 1971

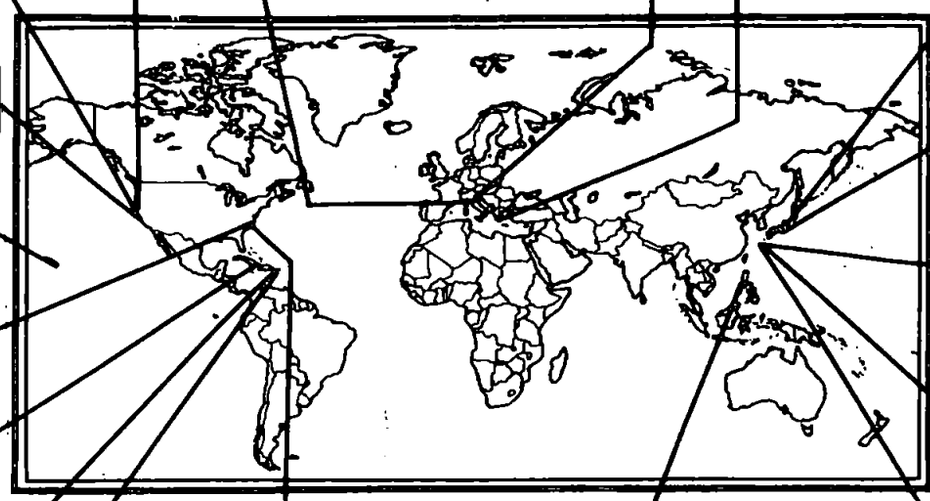

DISTRIBUTION BY BATTALION/SQUADRON

	INF BNS	VMFA	VMA	VMA(AW)	VMCJ	VMO	VMGR	HMA	HML	HMM	HMH
WESTPAC	6	2	2	1	1	1	1		1	2	1
OKINAWA	(4)						(1)		(1)	(1)	(1)
JAPAN		(2)	(2)	(1)	(1)						
LANDING FORCE	(2)									(1)	
MIDPAC	2	3								1	1
HAWAII	(2)	(3)								(1)	(1)
EASTPAC	10	4	2	2	1	1	1		1	2	2
EL TORO/SANTA ANA		(4)	(2)	(2)	(1)		(1)			(2)	(2)
CAMPEN	(10)					(1)			(1)		
ATLANTIC	8	4	3	3	1	1	1	1	1	3	2
CAMP LEJEUNE	(6)										
CHERRY POINT		(1)		(3)	(1)		(1)				
BEAUFORT		(3)	(3)								
NEW RIVER						(1)		(1)	(1)	(2)	(2)
QUANTICO										(1)	
CARIBBEAN	(2)										
EUROPE	1									1	
MEDITERRANEAN	(1)									(1)	
GRAND TOTAL	27	13	7	6	3	3	3	1	3	9	6

Unclassified

UNCLASSIFIED

[redacted]

TAB 31-1

[redacted]

UNCLASSIFIED

MARINE CORPS COMMAND CENTER

15 SEPTEMBER 1971

FLEET MARINE FORCE MOVEMENTS

	UNIT	ETD/ATD	FROM	DESTINATION	ETA/ATA
	MOVEMENTS 9 - 15 SEPTEMBER 1971				
(3)	VMFA-333	9SEP71 14SEP71	SOUDA BAY, CRETE OPS AEGEAN SEA	OPS AEGEAN SEA ATHENS, GREECE	10SEP71 15SEP71
(9)	LANFORCARIB 1-71 (BLT 1/6)	10SEP71	CAMP LEJEUNE, NORTH CAROLINA	VIEQUES, PUERTO RICO	15SEP71
(5)	DET A, VMCJ-2	10SEP71	OPS TYRRHENIAN SEA/WESTERN MED	GENOA, ITALY	11SEP71
(7)	VMA(AW)-224	15SEP71 15SEP71	CHERRY POINT, NORTH CAROLINA NAS ALAMEDA, CALIFORNIA	NAS ALAMEDA, CALIFORNIA USS CORAL SEA (CVA-43)	15SEP71 15SEP71
(8)	LANFORCARIB 2-71 (BLT 2/6)	10SEP71	ACTIVATED (CAMP LEJEUNE, N. CAROLINA)		
	PROJECTED MOVEMENTS 16 - 22 SEPTEMBER 1971				
(4)	LANFOR6THFLT 1-71 (32D MAU)	21SEP71	LIVORNO, ITALY	BARCELONA, SPAIN	22SEP71
(5)	DET A, VMCJ-2	17SEP71	GENOA, ITALY	OPS WESTERN MED	17SEP71
(1)	HQ 8TH MAB	20SEP71	CAMP LEJEUNE, NORTH CAROLINA	NAPLES, ITALY	4OCT71

NOTES:

(1) CG FMFLANT ACTIVATED THE 8TH MAB (HQ, 8TH MAB, BLT 1/2 (LANFORSIXTHFLT 2-71), BLT 3/6 AND PROV MAG-40) FOR PLANNING AND PARTICIPATION IN EXERCISE DEEP FURROW-71. THE 8TH MAB WAS ACTIVATED FOR OPERATIONS EFFECTIVE 130401Z SEP71. EXERCISE DEEP FURROW-71 IS A JOINT AND COMBINED NATO EXERCISE TO BE CONDUCTED DURING THE PERIOD 9-20OCT71 TO INCLUDE AMPHIBIOUS LANDINGS IN TURKISH THRACE BY A COMBINED U.S. AND UNITED KINGDOM/ITALIAN LANDING FORCE. BGEN T. H. MILLER, JR., AWC 2D MAW, IS DESIGNATED AS CG 8TH MAB. HQ 8TH MAB IS SCHEDULED TO DEPART CAMP LEJEUNE ON 20SEP71 ENROUTE TO NAPLES, ITALY. EDA NAPLES IS 4OCT71.

(2) THE 7TH MAB (HQ, 7TH MAB, 7TH MARINES (w/2/7, 3/7 & 1/3), 3D BN, 11TH MAR (-), BLT 2/1 (LANFORRESERVE) AND PROV MAG-50) IS PARTICIPATING IN ROPEVAL 3-71 DURING THE PERIOD 8-17 SEP71 IN THE CAMP PENDLETON/CLEVELAND NATIONAL FOREST AREAS. THE 7TH MAB WAS ACTIVATED FOR PLANNING ON 1JUL71 AND FOR EMBARKATION AND OPERATIONS EFFECTIVE 071500Z SEP71. ROPEVAL 3-71 IS A MAB SIZE AMPHIBIOUS EXERCISE. LANDING FORCE OPERATIONS ARE DESIGNED TO TRAIN FORCES IN THE PLANNING AND EXECUTION OF AMPHIBIOUS OPERATIONS INVOLVING THE TECHNIQUE OF STAND-OFF AMPHIBIOUS ASSAULT AND ASPECTS OF THE SEA-BASING CONCEPT. THE 3D BN, 1ST MAR AND VMA(AW)-242 HAVE BEEN DESIGNATED AS THE AGGRESSOR FORCES. BGEN P. G. GRAHAM, CG FORTRPS FMFPAC, HAS BEEN DESIGNATED AS CG 7TH MAB.

(3) CONDUCTED OPERATIONS IN THE AEGEAN SEA (10-14SEP71). AT ATHENS, GREECE, FOR UPKEEP DURING THE PERIOD 15-26SEP71.

(4) AT LIVORNO, ITALY, FOR PORT VISIT DURING THE PERIOD 8-20SEP71.

(5) AT GENOA, ITALY, FOR PORT VISIT DURING THE PERIOD 11-16SEP71. SCHEDULED FOR OPERATIONS IN THE WESTERN MED DURING THE PERIOD 17-26SEP71.

(6) AT SUBIC BAY, R.P.I., FOR UPKEEP DURING THE PERIOD 7-24SEP71.

(7) VMA(AW)-224 (W/12 A6A A/C) COMMENCED LOADING ABOARD THE USS CORAL SEA (CVA-43) ON 15SEP71 FOR PRE-WESTPAC CRUISE READINESS TRAINING DURING THE PERIOD 20SEP-20OCT71. OPCON OF VMA(AW)-224 WAS CHOPPED TO COMMANDER ATTACK CARRIER AIR WING 15 (COMM CVW-15) ON 15SEP71. THE USS CORAL SEA IS SCHEDULED TO DEPART FOR WESTPAC ON 12NOV71.

(8) BLT 2/6 (LANFORCARIB 2-71) WAS ACTIVATED FOR PLANNING ON 10SEP71 AND FOR OPERATIONS ON 17DEC71. BLT 2/6 IS SCHEDULED TO DEPLOY AS LANFORCARIB 2-71 DURING THE PERIOD 27DEC71-30JUN72.

(9) BLT 1/6 (LANFORCARIB 1-71) WILL CONDUCT A LANDING EXERCISE (15-16SEP71) AND IS SCHEDULED TO PARTICIPATE IN ESCORT TIGER TEN DURING THE PERIOD 17-22SEP71. ESCORT TIGER TEN IS A QUICK REACTION CONTINGENCY EXERCISE BEING CONDUCTED IN THE VIEQUES, P.R., AREA.

Unclassified

UNCLASSIFIED

TAB 31-2

[redacted]

[redacted]

MARINE CORPS COMMAND CENTER

UNCLASSIFIED

FMF PACIFIC UNIT LOCATIONS AND STRENGTHS*
(MIDPAC/EASTPAC)

15 SEPTEMBER 1971

MIDPAC

FMFPAC

HQ, FMFPAC

1st MAR BDE

HQ, 1ST MAR BDE (KANEOHE)

3D MARINES (-) (REIN)
- 1/3 (CAMPEN)
- 2/3

MAG-24
- VMFA-122 (F-4B)
- VMFA-212 (F-4J)
- VMFA-235 (F-4J)
- HMM-262 (CH-46D)
- HMH-463 (CH-53D)
- DET, VMO-6 (-) (OV-10A)
- DET, HML-367(-) (UH-1E)

MIDPAC STRENGTH RECAPITULATION	USMC	USN
HQ, FMFPAC	1,054	35
HQ, 1ST MAR BDE	280	28
3D MAR(-) (REIN)	1,028	53
SERVICE/SUPPORT UNITS	773	1
MAG-24	1,729	34
OTHER	721	15
GRAND TOTAL MIDPAC	5,585	166

EASTPAC

I MAF

HQ, I MAF (CAMP PENDLETON)

1ST MAR DIV (-) (REIN)

1ST MARINES
- 1/1
- 2/1
- 3/1

5TH MARINES 3/3 (CADRE)
- 1/5
- 2/5
- 3/5

7TH MARINES
- 1/7 (CADRE)
- 2/7
- 3/7

FORTRPS FMFPAC

HQ, FORTRPS FMFPAC (29 PALMS)

3D MAW

HQ, 3D MAW (EL TORO)

MAG-11 (EL TORO)
- VMFA-314
- VMFA-323 (F-4B)
- VMFA-334
- VMFA-531 (F-4B)

MAG-13 (EL TORO)
- VMA-214 (A-4F)
- VMA-223 (A-4F)
- VMA(AW)-225
- VMA(AW)-242 (A-6A)
- VMCJ-3 (RF-4B/EA-6A)

MWSG-37 (EL TORO)
- VMGR-352 (KC-130F)

MHTG-30 (SANTA ANA)
- HMHT-301 (CH-53A)
- HMMT-302 (CH-46F)

MAG-16 (SANTA ANA)
- HMM-161 (CH-46D)
- HMM-163 (CH-46F)
- HMH-361 (CH-53A)
- HMH-363 (CH-53A)

MAG-16 ELEMENTS (CAMPEN)
- VMO-2
- HML-267 (OV-10A/UH-1E)

MCCRTG-10 (YUMA)
- VMFAT-101 (F-4B)
- VMAT-102 (A-4E)
- VMT-103 (TA-4F/J)

1ST FSR

EASTPAC	USMC	USN
I MAF	21	
1ST MAR DIV (-) (REIN)	14,860	569
FORTRPS FMFPAC	1,524	70
3D MAW	11,552	182
1ST FSR	1,350	39
GRAND TOTAL EASTPAC	29,307	860

*SOURCE: MARES FORSTAT REPORT DATED 7SEP71.

Unclassified

TAB 32

UNCLASSIFIED ~~SECRET~~

[redacted]

MARINE CORPS COMMAND CENTER

UNCLASSIFIED

FMF PACIFIC UNIT LOCATIONS AND STRENGTHS AND OSD CEILING CONSIDERATIONS (WESTPAC)

15 SEPTEMBER 1971

RVN

USMC TRANSITIONAL SUPPORT FORCE

NAVFORV	3
HQ STAFF MACV	49
JUSPAO	4
SAE	2
NAVADVGRU	76
SOG	12
DEF COM AGCY	5
SU #1, 1ST ANGLICO	175
EMBASSY SECURITY	156
CORDS	5
DET, H&HS-18	20
DOD SPEC REP	3
ROK LOG TEAM	13
CREDIT ACCOUNT	4
WESTPAC TRANS OFF	1
TOTAL - OSD PROGRAM XIV SPACE AUTHORIZATION	528

	USMC	USN
OSD PROGRAM XIV SPACE AUTHORIZATION	528	
SUB UNIT 1, 1ST ANGLICO	185	10
MACV STAFF/MACV FIELD	161	
NAVADVGRU/MACV UNITS	34	
OTHERS	154	
TOTAL RVN STRENGTH AS OF 9SEP71.	534	10

OKINAWA

III MAF (TF-79)

HQ, III MAF

3D MARDIV (-) (REIN) (TF-79.2)

HQ, 3D MARDIV (-)(REIN)
- 4TH MARINES
  - 1/4 (BLT)
  - 2/4
  - 3/4
- 9TH MARINES
  - 1/9
  - 2/9 (31ST MAU)
  - 3/9

1ST MAW

MAG-36

VMGR-152	(KC-130F)
VMO-6 (-)	(OV-10A)
HMH-462	(CH-53D)
HMM-164	(CH-46D/CH-53D/UH-1E)(31ST MAU)
HMM-165	(CH-46D)
HML-367	(UH-1E)

3D FSR

	USMC	USN
(1) OSD PROGRAM XIV SPACE AUTHORIZATION	19,249	934
OKINAWA STRENGTH RECAPITULATION		
III MAF		
HQ, III MAF	131	
3D MARDIV (-)(REIN)	12,364	560
1ST MAW ELEMENTS	2,303	24
3D FSR	2,787	41
(2) TOTAL III MAF	17,585	625

JAPAN

1ST MAW (TF-79.3)

HQ, 1ST MAW

MAG-12

VMA-211	(A-4E)
VMA-311	(A-4E)
VMA(AW)-533	(A-6A)

MAG-15

VMFA-115	(F-4B)
VMFA-232	(F-4J)
VMCJ-1	(EA-6A/RF-4B)

	USMC	USN
(3) OSD PROGRAM XIV SPACE AUTHORIZATION	7,000	
JAPAN STRENGTH RECAPITULATION		
HQ, 1ST MAW	695	37
1ST MAW	4,930	51
TOTAL 1ST MAW	5,625	88

NOTES
(1) THIS FIGURE INCLUDES 459 NON-FMF SPACES NOT REFLECTED BELOW.
(2) LESS ONE MAU AFLOAT AND CHARGEABLE TO COMSEVENFLT.
(3) THIS FIGURE INCLUDES 921 NON-FMF SPACES NOT REFLECTED BELOW.

SOURCES: RVN STRENGTH: COMUSMACV WEEKLY STRENGTH REPORT MSG 110800ZSEP71.

OKI/JAPAN STRENGTH: MARES FORSTAT REPORT DATED 7SEP71.

Unclassified

UNCLASSIFIED

[redacted]

TAB 33

[redacted]

UNCLASSIFIED

MARINE CORPS COMMAND CENTER

LANDING FORCES, SEVENTH FLEET

31st MAU *

15 SEPTEMBER 1971

UNITS EMBARKED TASK GROUP 79.4	STRENGTH USMC OFF	STRENGTH USMC ENL	STRENGTH USN OFF	STRENGTH USN ENL
31ST MAU HQ DET	9	13		
COL E. F. ROTH, JR.				
BLT 2/9				
(LTCOL F. J. JOHNSON, JR.)				
2D BN, 9TH MARINES	40	1024	2	38
E/2/12TH MARINES	4	89		2
PLT, CO C, 3D RECON BN	1	23		2
PLT, CO B, 1ST AMTRAC BN	1	44		1
PLT, CO C, 3D SP BN	1	38		2
PLT, CO A, 3D MT BN	1	21		
PLT, CO A, 3D TANK BN	1	26		1
PLT, CO A, 3D ENGR BN	1	37		1
PLT, CO B, 3D MED BN		5	1	16
DET, HQBN, 3D MARDIV	1	7		
LOGISTIC SUPPORT UNIT				
DET, 3D SERV BN	1	31		1
DET, 3D FSR	1	25		
DET, 3D DENTAL CO			1	1
HMM-164	51	230	1	2
(LTCOL A. J. KETTERING)				
DET, HMH-462	8	29		
DET, HML-367	7	17		
TOTALS	128	1646	5	67

SHIPPING

USS NEW ORLEANS	(LPH-11)
USS VANCOUVER	(LPD-2)
USS PEORIA	(LST 1183)
USS THOMASTON	(LSD-28)

AIRCRAFT

13/CH-46D
4/CH-53D
4/UH-1E

ARMS & EQUIPMENT

1	LVTP-5 CMD
10	LVTP-5
5	M48 TANKS
6	105 HOW TD
8	106MM RR
8	81MM MORTAR
36	TRUCK, UTILITY PLATFORM W/O 106 RR, M-274
40	TRUCK, UTILITY, M-151 & M-715
1	TRUCK, UTILITY MRC-83
2	TRUCK, UTILITY MRC-123
4	TRUCK, UTILITY MRC-109
1	TRUCK, UTILITY MRC-124
1	TRUCK, UTILITY MRC-135
1	TRUCK, AMBULANCE M-718
1	TRUCK, CARGO 5T M-54
2	TRUCK, TANK M-49
2	TRUCK, DUMP 5T M-51
5	TRUCK, CARGO 3/4T M-37
35	TRUCK, CARGO 2½T M-35
1	TRUCK, WRECKER 5T M-543
36	TRAILER, CARGO M-416
17	TRAILER, CARGO M-105
6	TRAILER, TANK WATER M-149
2	TRAILER, CARGO M-101
2	KW LIGHT UNIT
4	TRACTOR TD-15 & TD-25
3	CRANE M-60 & M-62
1	HYPOCHLORINATION UNIT
2	TRUCK, M-43
2	ROUGH TERRAIN FORK LIFT (6000 LBS)
1	STEAM CLEANER
1	WATER PURIFICATION UNIT
1	BATH UNIT
2	GENERATOR PU 708/G & PU 692/G
4	GENERATOR PU-667 & PU 669
51	M60 MG
18	M60 MG HELO MOUNTED
39	50 CAL. HELO MOUNTED
6	60MM MORTAR
24	3.5 ROCKET LAUNCHER
8	FLAME THROWERS
10	50 CAL. MG

BLT 1/4 *

15 SEPTEMBER 1971

UNITS EMBARKED TASK GROUP 79.5	STRENGTH USMC OFF	STRENGTH USMC ENL	STRENGTH USN OFF	STRENGTH USN ENL
BLT 1/4				
(LTCOL D. G. ROBISON)				
1ST BN, 4TH MARINES	43	1056	2	35
BTRY "G", (REIN), 3D BN, 12TH MAR	8	119	1	2
PLT, CO D, 3D RECON BN	1	20		
PLT, CO A, 1ST AMTRAC BN	1	39		1
PLT, CO C, 3D TANK BN	1	27		1
PLT, CO C, 9TH MT BN	1	22		
PLT, CO C, 3D ENGR BN	1	39		1
PLT, CO C, 3D SP BN	1	45		2
PLT, CO D, 3D MED BN		5	1	17
DET, 3D DENTAL CO			1	1
DET, HQBN, 3D MARDIV	1	4		
LOGISTIC SUPPORT UNIT	1	38		
DET, 3D SERV BN				
DET, 3D FSR				
DET B, HML-367				
TOTALS	59	1414	5	60

SHIPPING

USS DUBUQUE	(LPD-8)
USS DURHAM	(LKA-114)
USS FREDERICK	(LST-1184)

AIRCRAFT

2/UH-1E

ARMS & EQUIPMENT

1	LVTP-5 CMD
10	LVTP-5
5	M48 TANKS
6	105 HOW TD
8	106MM RR
8	81MM MORTAR
33	TRUCK, UTILITY PLATFORM W/O 106 RR, M-274
30	TRUCK, UTILITY , M-151
4	TRUCK, VAN MRC-109
2	TRUCK, UTILITY M-123
2	TRUCK, UTILITY M-124
1	TRUCK, AMBULANCE M-718
2	TRUCK, AMBULANCE M-43
16	TRUCK, CARGO 2½T M-35
4	TRUCK, CARGO 3/4T M-37
2	TRUCK, TANK M-49
2	TRUCK, DUMP 5T M-51
14	TRUCK, CARGO 5T M-54
1	TRUCK, WRECKER 5T M-543
4	TRAILER, CARGO M-101
6	TRAILER, CARGO 3/4T M-101A1
15	TRAILER, CARGO M-105
4	TRAILER, TANK WATER M-149
27	TRAILER, CARGO M-416
1	30 KW GENERATOR
1	GENERATOR SET PU-720G
1	GENERATOR SET TRAILER MOUNTED PU-692G
1	BATH UNIT
1	WATER PURIFICATION UNIT
2	CONEX BOX
1	STEAM CLEANER

* SEE TAB 31 FOR PRESENT LOCATION

UNCLASSIFIED

Unclassified

TAB 34

[redacted]

[redacted]

UNCLASSIFIED

MARINE CORPS COMMAND CENTER

FMF ATLANTIC UNIT LOCATIONS AND STRENGTHS*

15 SEPTEMBER 1971

EAST COAST

	FMFLANT STRENGTH RECAPITULATION	USMC	USN
FMFLANT			
HQ, FMFLANT (NORFOLK)	HQ, FMFLANT	806	4
2D MARDIV			
HQ, 2D MARDIV (CAMLEJ)	2D MARDIV	15,692	657
2D MARINES			
1/2			
2/2			
3/2 (LANFOR6THFLT 1-71)(32D MAU)			
6TH MARINES			
1/6 (LANFORCARIB 1-71)			
2/6			
3/6			
8TH MARINES			
1/8			
2/8 (GTMO BN (-) (REIN))			
3/8			
FORTRPS FMFLANT			
HQ, FORTRPS (CAMLEJ)	FORTRPS, FMFLANT	5,117	135
2D MAW			
HQ, 2D MAW (CHERRY POINT)	2D MAW	14,605	203
MAG-14 (CHERRY POINT)			
VMCJ-2 (RF-4F/EA-6A)			
VMA(AW)-121 (A-6A)			
VMA(AW)-224 (A-6A)			
VMFA-312 (F-4B)			
VMA(AW)-332 (A-6A)			
MWSG-27 (CHERRY POINT)			
VMGR-252 (KC-130F)			
MCCRTG-20 (CHERRY POINT)			
VMFAT-201 (F-4B/J)			
VMAT(AW)-202 (A-6A/TC-4C)			
VMT-203 (TA-4F/J)			
MAG-31 (BEAUFORT)			
VMFA-251 (F-4B/J)			
VMFA-333 (F-4J)			
VMFA-451 (F-4J)			
MAG-32 (BEAUFORT)			
VMA-324 (A-4E/M)			
VMA-331 (A-4E)			
VMA-513 (AV-8A)			
MAG-26 (NEW RIVER)			
VMO-1 (OV-10A)			
HML-167 (UH-1E/N)			
HMM-162 (CH-46F/CH-53D/UH-1E)(LANFOR6THFLT 1-71)(32D MAU)			
HMM-261 (CH-46F)			
HMM-264 (CH-46F/CH-53D/AH-1J)			
HMM-263 (CH-46D/F) (QUANTICO)			
HMH-461 (CH-53A/D)			
HMH-362 (CH-53D)			
HMA-269 (UH-1E/N/AH-1J)			
MHTG-40 (NEW RIVER)			
HMHT-401 (CH-53D)			
HMMT-402 (CH-46F)			
2D FSR	2D FSR	2,041	23
	GRAND TOTAL FMFLANT	38,261	1,022

* SOURCE: MARES FORSTAT REPORT DATED 7SEP71.

TAB 35

[redacted]

UNCLASSIFIED

Unclassified

~~CONFIDENTIAL~~

UNCLASSIFIED

MARINE CORPS COMMAND CENTER

LANDING FORCE, SIXTH FLEET 1-71 *
32D MAU

15 SEPTEMBER 1971

UNITS EMBARKED	STRENGTH			
TASK GROUP 61/62	USMC		USN	
	OFF	ENL	OFF	ENL
32D MAU HQ	12	38		
(COL J. R. WEAVER)				
DET, PAO SECT				
DET, PHOTO SECT				
BLT 3/2				
(LTCOL T. J. WILLIS)				
3D BN, 2D MARINES	42	897	2	30
DET, HQCO, 2DMAR DIV		4		
BTRY I, 3DBN, 10THMAR	8	144		2
DET, HQBTRY, 3DBN, 10THMAR		7	1	
3D PLAT, CO A, 2D ENGR BN	1	38		
1ST PLAT, CO B, 2D RECON BN	1	23		1
2D PLAT, CO B, 2D TANK BN	1	34		
3D PLAT, CO, 2D AMTRAC BN	1	44		1
DET, RADAR BEACON TEAM		2		
LOGISTICAL SUPPORT UNIT 32	12	145	2	26
(MAJOR W. F. FINNEGAN)				
DET, 2D SERVICE BN				
DET, 2D FSR				
1ST PLAT, CO A, 2D SP BN				
DET, 2D MED BN				
1ST PLAT, CO C, 8TH MT BN				
PROV MAG-60 (LTCOL J. W. ALBER)	2	1		
HMM-162 (-) (REIN)	44	185	1	2
DET, MASS-1	2	4		
TOTALS	126	1566	6	62

SHIPPING

USS GUAM (LPH-9)
USS NASHVILLE (LPD-13)
USS SPIEGEL GROVE (LSD-32)
USS NEWPORT (LST-1179)

AIRCRAFT

12/CH-46F
4/CH-53D
2/UH-1E

ARMS & EQUIPMENT

1 LVTP-5 CMD
10 LVTP-5
6 105MM HOWITZER
7 M48 TANKS
8 106MM RR
8 TRUCKS W/106MM RR
8 81 MM MORTARS
8 FLAME THROWERS
40 TRAILER CARGO
22 TRAILER, CARGO M-105
3 TRAILER, CARGO 3/4 TON
6 TRAILER, TANK
9 TRAILER, TANK WATER ½ TON
3 SEMI-TRAILER, 12 TON
2 DOLLY TRAILER CONVERTER
4 TRUCK UTILITY MRC-83
7 TRUCK UTILITY MRC-109
2 TURCK UTILITY MRC-124
41 TRUCK UTILITY ¼ TON
1 TRUCK M-715 W/ VAN ELECTRIC
1 TRUCK, TRACTOR 5 TON
4 TRUCK, CARGO 5 TON
30 TRUCK PLATFORM UTILITY ½ TON
5 TRUCK, DUMP 5 TON
3 TRUCK, AMBULANCE 1¼ TON
2 TRUCK, AMBULANCE ¼ TON
3 TRUCK, CARGO 3/4 TON
1 TRUCK, 2½ TON
39 TRUCK, CARGO 2½ TON
2 TRUCK, WRECKER 5 TON
1 TRUCK, LIFT FORK, ROUGH TERRAIN
3 TRUCK, TANK GASOLINE, 1200 GAL
2 CRAWLER CRANE
4 BULLDOZER
1 CRANE M60
4 EIMCO TRACTOR
6 TRACTOR MED
1 AMBULANCE 3/4 TON
1 JEEP AMBULANCE ¼ TON
1 FORK LIFT
1 STEAM TRAILER
2 FLOOD LIGHT TRAILER
1 ERDLATOR WATER DIST EQUIP SET 600 GP
1 FLR 5 KW GENERATOR
2 BLADDERS, 10,000 GALS
2 BATH UNITS
2 GENERATOR SET
2 COMPRESSOR
1 TRUCK, M35 W/ WELDER
1 MINE DETECTOR

* SEE TAB 31 FOR PRESENT LOCATIONS.
PROV MAG-60 ALSO INCLUDES VMFA-251 AND VMA (AW)-121 (OPCON TO MAG-32 AND MAG-14 RESPECTIVELY) WHICH ARE ON CONUS STANDBY FOR CONTINGENCY OPERATIONS.

LANDING FORCE, CARIBBEAN 1-71 *

11 AUGUST 1971

UNITS EMBARKED	STRENGTH			
TASK GROUP 45.9	USMC		USN	
	OFF	ENL	OFF	ENL
BLT 1/6				
(LTCOL T. F. QUALLS)				
1ST BN, 6TH MARINES	35	834	2	31
DET, HQCO, 6TH MARINES				
DET, HQ BTRY, 2D BN, 10TH MAR				
BTRY D, 2D BN, 10TH MAR	6	108	1	2
PLAT, CO A, 2D RECON BN	1	23		
PLAT, CO B, 2D ENGR BN	1	30		
PLAT, CO A, 8TH MT BN	1	22		
PLAT, CO A, 2D SP BN	1	39		
PLAT, CO B, 2D TANK BN	1	28		
PLAT, CO B, 2D AMTRAC BN	1	43		
DET, HQBN, 2D MARDIV	1	14		
DET, 2D SERVICE BN	1	38		
DET, 2D FSR	1	36		
DET, 2D MED BN		8		10
DET, 2D DENTAL CO			1	1
TOTALS	50	1223	4	44

SHIPPING

USS FRANCIS MARION (LPA-249)
USS CHARLESTON (LKA-113)
USS SAN MARCOS (LSD-25)
USS YORK COUNTY (LST-1175)

AIRCRAFT

ARMS & EQUIPMENT

6 105MM HOW
11 LVTP
8 106MM RR
8 81MM MORTAR
5 M-48 TANKS
30 TRAILER ¼T
16 TRAILER 1¼T
1 TRAILER 3/4T
4 TRAILER, WATER
3 TRAILER (M-101) 3/4T
3 SEMI-TRAILER 12T
3 TRUCK UTILITY MRC-83
6 TRUCK UTILITY MRC-109
2 TRUCK UTILITY MRC-124
3 TRUCK, DUMP 5T
3 TRUCK, CARGO 3/4T
35 TRUCK, CARGO 2½T
3 SEMI TRUCK 12T
1 TRUCK, SHOP SET
1 TRUCK 5T
1 AMBULANCE ¼T
1 AMBULANCE 3/4T
30 JEEP ¼T
32 MULES
2 FUEL TANKER
2 TRACTOR 5T
2 WRECKER
1 CRANE M-60
2 CRAWLER CRANE
1 TRUCK CRANE
5 CRAWLER TRACTOR
2 ROUGH TERRAIN FORK LIFT
1 STEAM CLEANING UNIT
1 TRAILER, BATH UNIT
1 FLOODLIGHT SET
1 GENERATOR
2 DOLLY TRAILER CONVERTER

Unclassified

* SEE TAB 31 FOR PRESENT LOCATION.
38TH MAU HQ (COL F. R. KRAINCE). PROV MAG-80 INCLUDING AN HMM, VMA, VMFA, AND DET, MASS ARE ADMINISTRATIVELY ASSIGNED AND ARE ON CONUS STANDBY FOR CONTINGENCY OPERATIONS.

TAB 36-1

UNCLASSIFIED ~~CONFIDENTIAL~~

CONFIDENTIAL

UNCLASSIFIED

MARINE CORPS COMMAND CENTER

GUANTANAMO BAY BATTALION (-) (REIN) *

15 SEPTEMBER 1971

UNITS	STRENGTH**				ARMS & EQUIPMENT
	USMC		USN		
	OFF	ENL	OFF	ENL	
2D BN (-)(REIN), 8TH MAR					5 M-103 TANKS
LTCOL B. S. PICKETT					7 M48 TANKS
2D BN, 8TH MARINES	32	618	3	21	2 M67 TANKS (FLAME)
BTRY B, 1ST BN, 10TH MAR	8	153		2	8 106MM RR
2D TANK BN (2 PLATS)	1	38			8 81 MORTAR
DET, 2D FSR (LSU)	3	25			6 155 HOW TD#
PLAT, 2D ANGLICO	2	48	3		4 105 HOW TD#
DET, 2D DENTAL CO			1	1	6 106MM RR#
					8 81 MORTAR#
TOTALS	46	882	7	24	

*SEE TAB 31 FOR LOCATION.
**MARES FORSTAT OF 7SEP71.
#USN OWNED AND USMC OPERATED.

TAB 36-2

[redacted]

UNCLASSIFIED

Unclassified

UNCLASSIFIED

Department of Defense

NUMBER OF CASUALTIES INCURRED BY U. S. MILITARY PERSONNEL
IN CONNECTION WITH THE CONFLICT IN VIET-NAM

Cumulative from January 1, 1961 through September 4, 1971

15 SEPTEMBER 1971

	Army	Navy *	Marine Corps	Air Force	Total
A. CASUALTIES RESULTING FROM ACTIONS BY HOSTILE FORCES					
1. Killed	25,146	1,050	11,465	455	38,116
2. Wounded or Injured					
a. Died of wounds	3,493	140	1,449	44	5,126
b. Nonfatal wounds					
Hospital care required	96,039	4,086	51,356	814	152,295
Hospital care not required	103,954	5,835	37,161	2,295	149,245
3. Missing					
a. Died while missing	1,643	182	5	395	2,225
b. Returned to control	48	7	6	26	87
c. Current missing	259	113	81	558	1,011
4. Captured or Interned					
a. Died while captured or interned	15	-	3	2	20
b. Returned to control	56	3	5	6	70
c. Current captured or interned	63	144	23	235	465
5. Deaths					
a. From aircraft accidents/incidents					
Fixed Wing	89	155	139	696	1,079
Helicopter	2,234	62	429	59	2,784
b. From ground action	27,974	1,155	12,354	141	41,624
TOTAL DEATHS a/	30,297	1,372	12,922	896	45,487
B. CASUALTIES NOT THE RESULT OF ACTIONS BY HOSTILE FORCES					
6. Current Missing	129	-	12	-	141
7. Deaths					
a. From aircraft accidents/incidents					
Fixed Wing	250	172	45	279	746
Helicopter	1,695	52	242	18	2,007
b. From other causes	4,743	609	1,391	261	7,004
TOTAL DEATHS	6,688	833	1,678	558	9,757

a/ Sum of lines 1, 2a, 3a and 4a.

*Navy figures include a small number of Coast Guard casualties.

Department of Defense
OASD (Comptroller)
Directorate for Information Operations
September 8, 1971

TAB 45-2

UNCLASSIFIED

Unclassified

~~CONFIDENTIAL~~

UNCLASSIFIED

MARINE CORPS COMMAND CENTER

STRENGTHS*

15 SEPTEMBER 1971

RVN ARMED FORCES (RVNAF)

ARMY (ARVN)	412,705
NAVY (VNN)	41,184
AIR FORCE (VNAF)	50,245
MARINE CORPS (VNMC)	13,806
REGIONAL FORCES (RF)	295,019
POPULAR FORCES (PF)	247,638
TOTAL RVNAF	1,060,597

UNITED STATES FORCES

ARMY	169,733
NAVY	9,881
AIR FORCE	35,546
MARINE CORPS	534
COAST GUARD	107
TOTAL U.S.	215,801

FREE WORLD MILITARY ASSISTANCE FORCES (FWMAF)

REPUBLIC OF KOREA	48,418
AUSTRALIA	6,036
PHILIPPINES	81
THAILAND	6,358
NEW ZEALAND	272
REPUBLIC OF CHINA	31
SPAIN	7
TOTAL FWMAF	61,203

TOTAL FORCES IN RVN	1,337,601

★ SOURCE: RVNAF - MACV MONTHLY RPT OF GVN STRENGTH AS OF 31MAY71.
ALL OTHERS - MACV WEEKLY STRENGTH RPT AS OF 2400, 9SEP71.

UNCLASSIFIED

Unclassified

TAB 46-2

~~CONFIDENTIAL~~

SECRET

UNCLASSIFIED

MARINE CORPS COMMAND CENTER

REPUBLIC OF KOREA MARINE CORPS

15 SEPTEMBER 1971

Commandant: General LEE, BYUNG MOON

Senior Marine Advisor: Colonel Howard T. PITTMAN, USMC

Strength: 32,360 (JUN71)

The Headquarters of the Republic of Korea Marine Corps (ROKMC) is located in Seoul. Marine Barracks are located in Seoul and the major Naval Bases at Inchon, Mokpo, Chejudo, Chinhae, Pusan, and Mukho. The ROKMC Supply and Maintenance Depot as well as the ROK Marine Schools Base are located at Chinhae. The Schools Base offers Recruit Training, NCO School, Supply School, LVT School, Officer Candidate Course, Drill Instructor School, Senior Amphibious Warfare School, English Language Training, and the ROKMC Command and Staff College. The ROK Marine Corps Amphibious Base at Pohang houses the 1st ROKMC Division (-), Special Training Unit to support ROK Marine personnel assigned to the 2d ROKMC Brigade (Blue Dragons) in Vietnam. The ROKMC is operationally organized as indicated below:

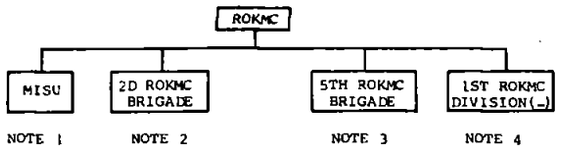

NOTE 1: Marine Island Security Unit (MISU) is a defense force approximating a reinforced Infantry Battalion in size and weaponry. It is located on the offshore islands of the Westerly extension of the DMZ mandated to the United Nations. Although it is administratively controlled by HQ, ROKMC, it is under the operational control of Commander, ROK Fleet. The organization of the MISU is indicated on Chart 1.

NOTE 2: The 2d ROK Marine Brigade is deployed to the Republic of Vietnam and organization is indicated on Chart 2.

NOTE 3: The 5th ROK Marine Brigade is currently deployed in a defensive role along the DMZ on the Kimpo Peninsula. It is administratively controlled by HQ, ROKMC but is under the operational control of I Corps (Group), Eighth U. S. Army. It is considered the Brigade would be fixed in position in the event of open hostilities in Korea and could not be readily redeployed without major adjustment in combat unit locations within the the United Nation Command during peacetime. The Brigade was initially formed from the assets of the list ROKMC Division and represents those units which the division is minus at this time. The current organization of the 5th Brigade is indicated on Chart 3.

NOTE 4: The 1st ROKMC Division (-) located at Pohang is administratively controlled by HQ, ROKMC and under the operational control of Commander, Naval Forces Korea. It is designated as the strategic Reserve for the Defense of the ROK. The organization for the Division (-) is indicated on Chart 4. It should be noted that the Amphibian Tractor Battalion is presently equipped with the LVT-3C.

MARINE ISLAND SECURITY UNIT (MISU)

COMMANDING OFFICER:
BGEN HUR HONG

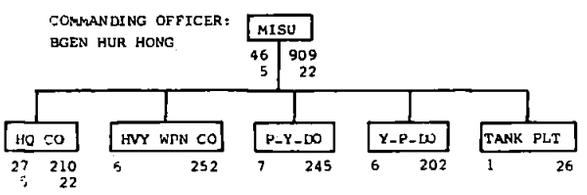

CHART #1

5TH ROK MARINE BRIGADE

COMMANDING GENERAL:
BGEN KIM, Suk Ku

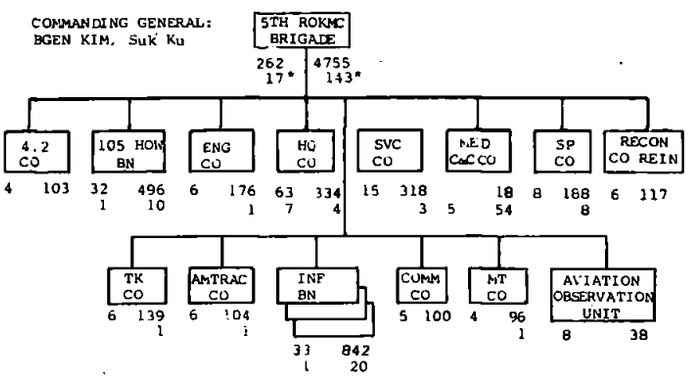

CHART #3

2D ROK MARINE BRIGADE

Strength: 7,208 (SEP71)

COMMANDING GENERAL:
MGEN LEE, Dong Yong

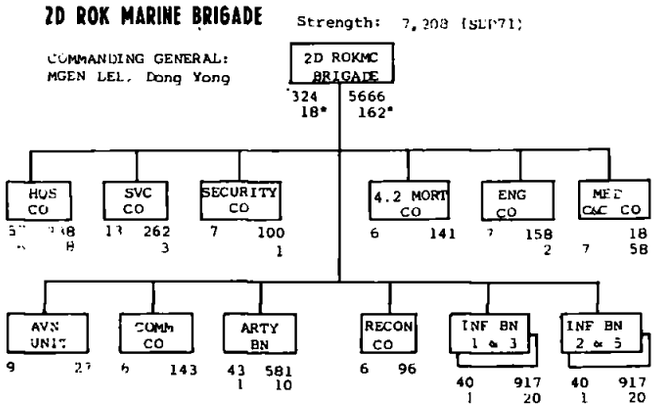

CHART #2

* Second line of figures under each block indicates ROK Navy personnel.
** Minus includes 1 Co Tanks assigned 5th Brigade and 1 Platoon Tanks attached MISU.

FIRST ROK MARINE DIVISION (-)

COMMANDING GENERAL:
MGEN KIM, YUN SANG

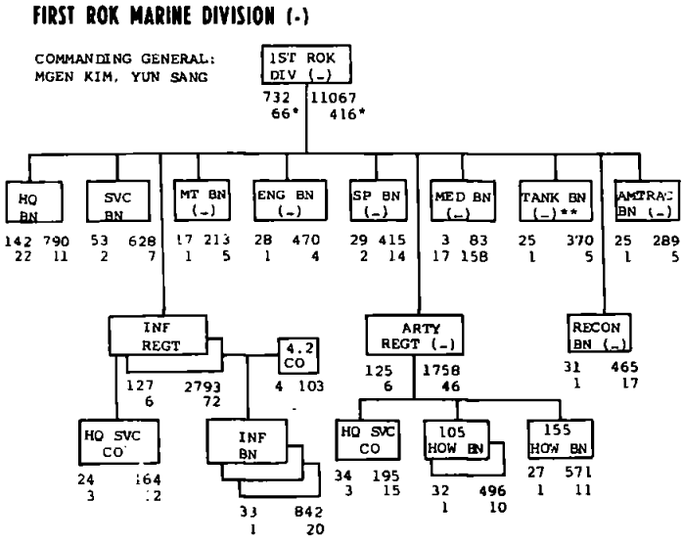

CHART #4

Unclassified

UNCLASSIFIED

SECRET

TAB 48-1

~~SECRET~~

UNCLASSIFIED

MARINE CORPS COMMAND CENTER

TABLE OF CONTENTS

22 SEPTEMBER 1971

SECTION I - MARINE CORPS FORCES - WORLD WIDE	LIST OF EFFECTIVE TABS	DATE OF LATEST CHANGE
ALLOCATION OF MARINE CORPS PERSONNEL	11	15SEP71
SELECTED PERSONNEL AND AIRCRAFT DATA	12	22SEP71●
UNITED STATES MARINE CORPS RESERVE	13-1	30DEC70
	13-2	23DEC70
	13-3	4AUG71
	13-4	23DEC70
MISCELLANEOUS NON-FMF UNITS	14-1	8SEP71
(MARINE BARRACKS)	14-2	22SEP71●
(MARINE SECURITY GUARD BATTALION)	14-3	14APR71
(MARINE DETACHMENTS AFLOAT)	14-4	14APR71
	14-5	30JUN71
SECTION II - STATUS OF FLEET MARINE FORCES		
STATUS OF FMF UNITS	21-1	15SEP71
	21-2	15SEP71
	21-3	15SEP71
	21-4	15SEP71
	21-5	22SEP71●
	21-6	22SEP71●
	21-7	15SEP71
	21-8	15SEP71
	21-9	22SEP71●
RECAPITULATION OF FMF ACTUAL STRENGTHS	22	15SEP71
DISTRIBUTION OF MAJOR GROUND EQUIPMENT AND AIRCRAFT	23	15SEP71
SECTION III - DISPOSITION OF FLEET MARINE FORCE UNITS		
FLEET MARINE FORCE DISPOSITION, DISTRIBUTION BY BATTALION/ SQUADRON AND MOVEMENTS	31-1	22SEP71●
	31-2	22SEP71●
FMF PACIFIC UNIT LOCATIONS AND STRENGTHS (MIDPAC/EASTPAC)	32	15SEP71
FMF PACIFIC UNIT LOCATIONS, STRENGTHS AND OSD CEILING CONSIDERATIONS (WESTPAC)	33	22SEP71●
LANDING FORCES - 7TH FLEET	34	15SEP71
FMF ATLANTIC UNIT LOCATIONS AND STRENGTHS	35	22SEP71●
LANDING FORCES - MEDITERRANEAN AND CARIBBEAN	36-1	15SEP71
GUANTANAMO BAY BATTALION	36-2	15SEP71
SECTION IV - GENERAL		
CHRONOLOGY OF SIGNIFICANT EVENTS	41-1	17MAR71
	41-2	21APR71
	41-3	23JUN71
	41-4	16JUN71
	41-5	1SEP71
USMC/ENEMY CASUALTIES IN RVN; CUMULATIVE DOD CASUALTY FIGURES ON U.S. MILITARY PERSONNEL AND COMPARATIVE USMC/ENEMY KIA IN CONNECTION WITH THE CONFLICT IN RVN	45-1	22SEP71●
	45-2	22SEP71●
	45-3	26MAY71
	45-4	1SEP71
DISPOSITION AND STRENGTH OF MAJOR U.S. AND FW FORCES IN RVN	46-1	22SEP71●
	46-2	22SEP71●
COMUSMACV STAFF, PRINCIPAL MARINE OFFICERS HQ MACV	47	1SEP71
REPUBLIC OF KOREA MARINE CORPS	48-1	22SEP71●
REPUBLIC OF VIETNAM MARINE CORPS	48-2	7JUL71
VIETNAM GEOGRAPHIC AND CLIMATE DATA	49-1	18NOV70
	49-2	18NOV70
CHRONOLOGY OF FMF DEPLOYMENT AND STRENGTH IN RVN	410-1	20JAN71
	410-2	25NOV70
	410-3	25NOV70
	410-4	25NOV70
	410-5	25NOV70
	410-6	25NOV70
	410-7	9DEC70
	410-8	10MAR71
	410-9	19MAY71
	410-10	23JUN71
	410-11	21JUL71
	410-12	21JUL71

CONTENTS OF THIS PUBLICATION
DOWNGRADED AT 3 YEAR INTERVALS
DECLASSIFIED AFTER 12 YEARS
DOD DIR 5200.10

UNCLASSIFIED

Unclassified

[redacted]

MARINE CORPS COMMAND CENTER

SELECTED PERSONNEL AND AIRCRAFT DATA

UNCLASSIFIED

PERSONNEL

22 SEPTEMBER 1971

		STRENGTH	PERCENT USMC	PERCENT FMF	PERCENT FMFPAC
USMC TOTAL	*	206,489	100.00		
FLEET MARINE FORCES		98,137	47.53	100.00	
FMF ATLANTIC	#	38,261	18.53	38.99	
FMF PACIFIC	#	59,876	29.00	61.01	
VIETNAM	¢	529	00.26		

SOURCE: * HQMC 1080-20 (ESTIMATED PERSONNEL DATA) AS OF 31AUG71.
MARES FORSTAT REPORT DATED 7SEP71.
¢ MACV WEEKLY STRENGTH REPORT AS OF 16SEP71.

AIRCRAFT

		FIXW	HELO	TOTAL	PERCENT USMC	PERCENT FMF	PERCENT FMFPAC
USMC TOTALS	**	771	607	1,378	100.00		
FLEET MARINE FORCES	@	677	556	1,233	89.48	100.00	
FMF ATLANTIC	@	300	255	555	40.34	45.01	
FMF PACIFIC	@	377	301	678	49.14	54.99	

SOURCE: ** DC/S AIR STATUS BOARD PHOTO AS OF 10AUG71.
@ MARES FORSTAT REPORT DATED 7SEP71.

TAB 12

[redacted]

Unclassified

UNCLASSIFIED

[redacted]

UNCLASSIFIED

MARINE CORPS COMMAND CENTER

MISCELLANEOUS NON-FMF UNITS
MARINE SECURITY GUARD BATTALION

22 SEPTEMBER 1971

MAP SYMBOL	DETACHMENT	COMMANDING OFFICER	T/O*
S-1	BATTALION HEADQUARTERS, WASHINGTON, D.C.	COL T. D. PARSONS	2/1
S-2	HEADQUARTERS COMPANY, WASHINGTON, D. C.	1STLT R. E. CAHILL	4/39
S-3	OTTAWA, CANADA DET.		7
S-4	SPECIAL SECURITY DETAIL, WASHINGTON, D. C.		6
S-5	COMPANY A, FRANKFURT, GERMANY	MAJOR J. L. COOPER	3/3
S-6	BELGRADE, YUGOSLAVIA		9
S-7	BERN, SWITZERLAND		7
S-8	BONN, GERMANY		5
S-9	BRUSSELS, BELGIUM		11
S-10	BUCHAREST, ROMANIA		18
S-11	BUDAPEST, HUNGARY		5
S-12	COPENHAGEN, DENMARK		5
S-13	DUBLIN, IRELAND		6
S-14	GENEVA, SWITZERLAND		5
S-15	HAMBURG, GERMANY		8
S-16	HELSINKI, FINLAND		5
S-17	LISBON, PORTUGAL		6
S-18	LONDON, ENGLAND		5
S-19	LUXEMBOURG, LUXEMBOURG		11
S-20	MADRID, SPAIN		5
S-21	MOSCOW, USSR		8
S-22	MUNICH, GERMANY		11
S-23	OLSO, NORWAY		5
S-24	PARIS, FRANCE		5
S-25	PRAGUE, CZECHOSLOVAKIA		25
S-26	REYKJAVIK, ICELAND		5
S-27	ROME, ITALY		5
S-28	SOFIA, BULGARIA		16
S-29	STOCKHOLM, SWEDEN		5
S-30	THE HAGUE, NETHERLANDS		5
S-31	VIENNA, AUSTRIA		5
S-32	WARSAW, POLAND		19
S-33	COMPANY B, BEIRUT, LEBANON	MAJOR J. B. DONOVAN	9
S-34	ABIDJAN, IVORY COAST		3/4
S-35	ADDIS ABBABA, ETHIOPIA		7
S-36	ATHENS, GREECE		5
S-37	AMMAN, JORDAN		6
S-38	ANKARA, TURKEY		10
S-39	BAMAKO, MALI		6
S-40	COLOMBO, CEYLON		5
S-41	CALCUTTA, INDIA		6
S-42	DAKAR, SENEGAL		6
S-43	DHAHRAN, SAUDI ARABIA		5
S-44	INSTANBUL, TURKEY		5
S-45	JERUSALEM, JERUSALEM		5
S-46	JIDDA, SAUDI ARABIA		6
S-47	KABUL, AFGHANISTAN		5
S-48	KATMANDU, NEPAL		7
S-49	ACCRA, GHANA		5
S-50	KHARTOUM, SUDAN		5
S-51	KINSHASHA, REP OF CONGO		5
S-52	KUWAIT CITY, KUWAIT		8
S-53	LAGOS, NIGERIA		5
S-54	MOGADISCIO, SOMALI REPUBLIC		7
S-55	MONROVIA, LIBERIA		8
S-56	NAIROBI, KENYA		5
S-57	NEW DELHI, INDIA		5
S-58	NICOSIA, CYPRUS		13
S-59	PRETORIA, SOUTH AFRICA		15
S-60	RABAT, MOROCCO		5
S-61	RAWALPINDI, PAKISTAN		8
S-62	TEHRAN, IRAN		9
S-63	TEL AVIV, ISRAEL		12
S-64	TRIPOLI, LIBYA		8
S-65	TUNIS, TUNISIA		6
S-66	COMPANY C, HONG KONG	MAJOR F. C. PLOWMAN	5
S-67	BANGKOK, THAILAND		2/2
S-68	CANBERRA, AUSTRALIA		9
S-69	DJAKARTA, INDONESIA		13
S-70	KUALA LUMPUR, MALAYA		5
S-71	MANILA, R. P. I.		9
S-72	RANGOON, BURMA		6
S-73	SEOUL, KOREA		17
S-74	SINGAPORE, MALAYSIA		6
S-75	TAIPEI, TAIWAN		11
S-76	TOKYO, JAPAN		5
S-77	VIENTIANE, LAOS		7
S-78	WELLINGTON, NEW ZEALAND		10
S-79	PHNOM PENH, CAMBODIA		15
S-80	COMPANY D, PANAMA CITY, PANAMA	MAJOR C. G. HOILMAN	5
S-81	ASUNCTION, PARAGUAY		5
S-82	BOGOTA, COLOMBIA		2/3
S-83	BRASILIA, BRAZIL		6
S-84	BUENOS AIRES, ARGENTINA		8
S-85	CARACAS, VENEZUELA		13
S-86	GUATEMALA, GUATEMALA		5
S-87	KINGSTON, JAMAICA		11
S-88	LA PAZ, BOLIVIA		13
S-89	LIMA, PERU		6
S-90	MANAGUA, NICARAGUA		10
S-91	MEXICO CITY, MEXICO		10
S-92	MONTEVIDEO, URAGUAY		5
S-93	PORT-AU-PRINCE, HAITA		11
S-94	QUITO, ECUADOR		10
S-95	RIO DE JANEIRO, BRAZIL		7
S-96	SAN JUSE, COSTA RICA		10
S-97	SAN SALVADOR, EL SALVADOR		14
S-98	SANTIAGO, CHILE		6
S-99	SANTO DOMINGO, DOMINICAN REPUBLIC		7
S-100	TEGUCIGALPA, HONDURAS		8
(1)S-101	COMPANY E, SAIGON, RVN	CAPT W. E. KELLER	15
S-102	INTERIOR GUARD FORCE, SAIGON, RVN		6
S-103	EXTERIOR GUARD FORCE, SAIGON, RVN		2/10
S-104	DANANG, RVN		2/90
			1/46
			10

(1) COMPANY E HAS A TOTAL OF 4 OFF AND 110 ENL ASSIGNED AS MEMBERS OF THE MARINE SECURITY GUARD, 10 MEMBERS OF WHICH ARE LOCATED AT THE AMERICAN CONSULATE IN DANANG. COMPANY E IS FURTHER AUGMENTED BY ONE OFF AND 46 ENL PERSONNEL FOR EXTERIOR GUARD PURPOSES.

MARINE DETACHMENTS AFLOAT

MAP SYMBOL	MARINE DETACHMENT		COMMANDING OFFICER	T/O*	HOME PORT
A-1	USS ALBANY	(CG-10)	CAPTAIN L. C. REIFSNIDER	39	MAYPORT, FLORIDA
A-2	USS AMERICA	(CVA-66)	CAPTAIN E. H. LAWRENCE	67	NORFOLK, VIRGINIA
A-3	USS CANOPUS	(AS-34)	CAPTAIN E. L. PLUNKETT	24	HOLY LOCK, SCOTLAND
A-4	USS CHICAGO	(CG-11)	CAPTAIN J. L. MIKKELSON	39	SAN DIEGO, CALIFORNIA
A-5	USS COLUMBUS	(CG-12)	CAPTAIN M. J. MOSS	39	NORFOLK, VIRGINIA
A-6	USS CONSTELLATION	(CVA-64)	CAPTAIN L. C. GOUND	67	SAN DIEGO, CALIFORNIA
A-7	USS CORAL SEA	(CVA-43)	CAPTAIN J. P. GLASGOW	55	ALAMEDA, CALIFORNIA
A-8	USS ENTERPRISE	(CVA-(N)-(65))	CAPTAIN B. L. WILLIAMS	67	ALAMEDA, CALIFORNIA
A-9	USS FRANKLIN D. ROOSEVELT	(CVA-42)	CAPTAIN G. H. WALLS	55	MAYPORT, FLORIDA
A-10	USS FORRESTAL	(CVA-59)	CAPTAIN J. H. VANDYNE	55	NORFOLK, VIRGINIA
A-11	USS HANCOCK	(CVA-19)	CAPTAIN L. R. FRESQUEZ	55	ALAMEDA, CALIFORNIA
A-12	USS HOLLAND	(AS-32)	CAPTAIN W. S. ALEXANDER	30	ROTA, SPAIN
A-13	USS HUNLEY	(AS-31)	CAPTAIN J. B. MATTHEWS	30	GUAM
A-14	USS INDEPENDENCE	(CVA-62)	CAPTAIN K. J. HEBERT	55	NORFOLK, VIRGINIA
A-15	USS INTREPID	(CVS-11)	CAPTAIN L. D. ALEXANDER	55	QUONSET POINT, R. I.
A-16	USS JOHN F. KENNEDY	(CVA-67)	CAPTAIN W. N. SHAHAN	67	NORFOLK, VIRGINIA
A-17	USS KITTY HAWK	(CVA-63)	CAPTAIN N. F. CARLUCCI	67	SAN DIEGO, CALIFORNIA
A-18	USS LITTLE ROCK	(CLG-4)	CAPTAIN E. D. WHITEHEAD	39	NEWPORT NEWS, VIRGINIA
A-19	USS LONG BEACH	(CG-(N)-(9))	CAPTAIN A. D. LEHR	39	VALLEJO, CALIFORNIA
A-20	USS MIDWAY	(CVA-41)	CAPTAIN S. H. BOEDDINGHAUS	55	ALAMEDA, CALIFORNIA
A-21	USS NEWPORT NEWS	(CA-148)	CAPTAIN F. D. THOMAS	35	NORFOLK, VIRGINIA
A-22	USS OKLAHOMA CITY	(CLG-5)	CAPTAIN J. D. CHASE	39	YOKOSUKA, JAPAN
A-23	USS ORISKANY	(CVA-34)	CAPTAIN C. J. SCHLACK	55	ALAMEDA, CALIFORNIA
A-24	USS PROTEUS	(AS-19)	CAPTAIN R. T. KOHL	23	VALLEJO, CALIFORNIA
A-25	USS PROVIDENCE	(CLG-6)	CAPTAIN D. F. WYRAUCH	39	SAN DIEGO, CALIFORNIA
A-26	USS RANGER	(CVA-61)	CAPTAIN W. J. DIBELLO	55	ALAMEDA, CALIFORNIA
A-27	USS SARATOGA	(CVA-60)	CAPTAIN D. W. CLEELAND	55	MAYPORT, FLORIDA
A-28	USS SIMON LAKE	(AS-33)	CAPTAIN B. J. FRIEBOLIN	24	CHARLESTON, S. C.
A-29	USS SPRINGFIELD	(CLG-7)	CAPTAIN G. E. BROWN	39	GAETA, ITALY
A-30	USS TICONDEROGA	(CVA-14)	CAPTAIN P. J. CORBETT	55	SAN DIEGO, CALIFORNIA
A-31	USS WASP	(CVS-18)	CAPTAIN E. R. KENNEY	55	QUONSET POINT, R. I.

Unclassified

TAB 14-2

* THE O/H FIGURE CLOSELY APPROXIMATES THE T/O AT ALL TIMES.

[redacted]

UNCLASSIFIED

[redacted] UNCLASSIFIED

MARINE CORPS COMMAND CENTER

STATUS OF FMF UNITS **

22 SEPTEMBER 1971

UNIT *	NOTE	UNIT COMMANDER	LOCATION	STRENGTH USMC	STRENGTH USN	UNIT READINESS ☆ CURRENT RATE	RSN	P	S	R	T	EXPECTED RATE	BY	MAJOR EQUIPMENT
3D MAW		MAJGEN L. E. BROWN	EL TORO	11552	182	C3	T	1	2	3	3	C2	711030	
MWHS-3 (-)		LTCOL H. E. SEXTON		712	110	C1		1	1	1	1			
SU 1, MWHS-3 (-)		MAJ P. J. VOGEL		235				5	5	5	5			
6TH CIT		CAPT W. C. HOWEY		19		C1		1	1	1	1			
4TH SSCT		CAPT H. G. WHITE		10		C1		1	1	1	1			
13TH FORCE DENTAL CO		CAPT J. R. EVANS (USN)	EL TORO		40	C4	P	4	1	1	1	C3	710915	
MWSG-37		LTCOL F. R. SMOKE	EL TORO			C3	X	4	3	3	3	C2	711001	
H&MS-37 (-)		MAJ L. K. WARN		533		C3	P	3	2	2	2	C3	720101	5/C-117D, 1/C-54D
SU 1, H&MS-37 (-)		MAJ L. C. WALLACE JR.		53		C2	P	2	1	1	1	C1	720101	
WERS-37		LTCOL M. PALLAI		214		C3	P	3	2	2	2	C3	720101	
VMGR-352 (3D MAW)	*	LTCOL G. L. CARLSON		270	1	C3	X	4	3	4	4	C3	720101	8/KC-130F
MACG-38		COL J. W. DRURY	EL TORO			C3	P	3	2	2	3	C2	711130	
H&HS-38 (-)		MAJ D. T. WILSON		242	1	C2	R	1	2	2	2	C1	710930	
SU 1, H&HS-38 (-)		MAJ E. D. CHABEY		67		C3	T	2	2	2	3	C2	710930	
1ST REDEYE PLAT		1STLT R. E. HAMANN		33		C2	R	2	1	2	1	C1	711001	
3D REDEYE PLAT		1STLT J. B. DOWLING		31		C2	R	2	1	2	1	C1	711001	
2D LAAM BN		LTCOL R. D. FOSTER	YUMA	640	3	C3	T	3	1	2	3	C1	711001	
MACS-7		LTCOL J. O. GREGERSON	CAMPEN	205		C2	X	4	2	3	4	C3	711001	
MACS-1 (-)		MAJ W. H. ALLEN	YUMA	206	2	C3	P	3	1	2	3	C2	711001	
SU 1, MACS-1 (-) (NWU)		CAPT H. POSTHUMA		61		C1		1	1	1	1			
MWCS-38		MAJ W. T. CHWATEK	EL TORO	251		C4	P	4	3	3	1	C3	711101	
MASS-3		MAJ V. J. FULLADOSA		166		C3	P	3	1	3	3	C2	711030	
MAG-11		COL L. J. STIEN	EL TORO			C4	P	4	4	4	4	C3	711101	
H&MS-11		LTCOL L. N. LEVIN		469		C4	P	2	4	4	2	C2	710915	
MABS-11		LTCOL N. E. DOUGLAS		343		C4	R	1	1	4	4	C3	711001	
VMFA-314 (CADRE)		MAJ A. G. BARTEL		64		C4	P	4	4	3	4		720101	3/F-4B
VMFA-323		MAJ T. G. LEACH		222		C4	P	4	1	3	4	C3	710930	15/F-4B
VMFA-334 (CADRE)		CAPT S. P. HUEY		1		C4	N	4	4	4	4			
VMFA-531		LTCOL R. HUTCHINSON		232		C2	X	3	2	1	3	C2	710930	14/F-4B
MAG-13		COL D. R. DAVIS	EL TORO			C4	T	4	3	4	4	C3	710930	
H&MS-13		LTCOL C. C. NEWMARK		771	1	C2	P	2	1	1	2	C1	710930	13/A-6A, 8/F-4B, 5/TA-4F
MABS-13		MAJ J. DERMODY		496	2	C2	P	2	2	1	1	C2	710930	
MATCU-65 (MAG-13)	*	CAPT D. M. TARBET	YUMA	40		C3	X	4	1	1	3	C4	711001	
MATCU-67 (MAG-13)	*	CAPT J. HANCOCK	EL TORO	49		C4	S	3	4	3	3	C3	710930	
MATCU-77 (CADRE) (MAG-13)	*							5	5	5	5			
VMA-214		LTCOL J. J. MCCARTHY		184		C2	X	3	2	2	3	C2	711030	16/A-4F
VMA-223		MAJ A. OSEGUERA		187		C4	P	4	3	4	3	C3	711231	13/A-4F
VMA(AW)-225 (CADRE)		MAJ R. C. TINSLEY		16		C4	N	5	4	4	5			
VMA(AW)-242		LTCOL M. S. NEWBILL		208	1	C4	R	3	3	4	3	C3	711013	6/A-6A
VMCJ-3		LTCOL M. W. DINNAGE		316		C4	P	4	1	2	3	C3	711220	10/RF-4B, 2/RA-6A
MAG-16		COL G. L. LILLICH	SANTA ANA			C3	P	3	2	2	2	C2	711231	
H&MS-16 (-)		MAJ H. W. HINTZ		405		C2	R	1	1	2	2	C1	711231	18/CH-46D, 14/CH-53A, 6/UH-1E, 7/OV-10A
SU 1, H&MS-16 (-)		MAJ G. W. LEE	CAMPEN	135		C1		1	1	1	1			
MABS-16		MAJ B. G. WILKISON	SANTA ANA	500		C3	P	3	2	2	2	C2	711231	
MATCU-74 (H&MS-16 (-))	*	CAPT G. V. BROWN		51		C3	P	3	1	2	2	C2	711231	
MATCU-75 (H&MS-16 (-))	*	CAPT P. D. HAYNES	CAMPEN	35		C4	P	4	2	2	3	C3	711231	
HML-267		LTCOL J. M. MORIARTY		317	9	C3	R	2	2	3	2	C2	711231	21/UH-1E, 9/OV-10A
VMO-2 (CADRE)		MAJ D. A. CAYLOR		2		C4	N	5	4	4	5	C3	711231	
HML-161		LTCOL G. H. DUNN	SANTA ANA	192		C3	P	3	2	2	2	C2	711231	19/CH-46D
HML-163		LTCOL F. A. MATHEWS		202	1	C2	P	2	1	1	1	C1	711231	21/CH-46F
HML-361		MAJ R. F. CAPTOR		166		C4	P	4	3	3	4	C3	711231	12/CH-53A
HML-363		LTCOL A. F. RIBBECK		191		C2	X	3	3	2	3	C2	711231	18/CH-53A

* PARENTHETIC UNIT INDICATES OPCON WHEN DIFFERENT FROM ORGANIZATIONAL STRUCTURE.

TAB 21

Unclassified

[redacted] UNCLASSIFIED

[redacted] UNCLASSIFIED

MARINE CORPS COMMAND CENTER

STATUS OF FMF UNITS **

22 SEPTEMBER 1971

UNIT *	NOTE	UNIT COMMANDER	LOCATION	STRENGTH USMC	STRENGTH USN	UNIT READINESS ☆ CURRENT RATE	RSN	P	S	R	T	EXPECTED RATE	BY	MAJOR EQUIPMENT
MHTG-30		COL R. BIANCHI	SANTA ANA			C1		1	1	1	1			
H&MS-30		MAJ D. G. DUNLAP		298	1	C1		1	1	1	1			6/CH-46F, 2/CH-53A
HMHT-301		MAJ D. A. DALRYMPLE		159		C1		1	1	1	1			9/CH-53A
HMMT-302		LTCOL R. G. RITCHIE		172		C1		1	1	1	1			16/CH-46F
MCCRTG-10		COL R. B. SINCLAIR	YUMA			C2	P	2	2	2	1	C2	711130	
H&MS-10		MAJ G. R. CALLISON		412	5	C1		1	1	1	1			
VMFAT-101		LTCOL T. R. MOORE		336		C3	P	3	2	2	3	C2	711231	23/F-4B
VMAT-102		LTCOL R. D. REID		267	2	C3	P	3	3	2	1	C2	711231	24/A-4E
VMT-103		MAJ G. L. ELLIS		206	4	C3	S	3	2	2	1	C2	711202	13/TA-4F, 5/TA-4J
1ST FSR		COL H. C. REED	CAMPEN	1350	39	C3	P	3	2	2	3	C2	711001	
H&SBN		MAJ R. E. JOHNSON		521	18	C3	P	3	2	2	3	C2	711001	
SUPPLY BN		MAJ R. J. WEBB		679	21	C2	P	2	2	2	2	C1	711001	
MAINT BN		MAJ A. A. MCVITTY		617		C3	P	3	2	2	3	C2	711001	
EAST COAST														
FMFLANT		LTGEN E. E. ANDERSON	NORFOLK	38261	1022	C1		1	1	1	1			
HQ FMFLANT				806	4									
H&SBN		COL L. H. EVINE		726	4	C2	P	2	1	1	2	C1	711001	
HQ SQDN		LTCOL D. PRUDHOMME		80		C2	X	4	2	1	1	C1	710901	1/C-131F, 1/C-54T, 2/T-28B, 1/UH-34D, 1/US-2A, 2/US-2B
2D MAR DIV		BGEN R. D. BOHN	CAMLEJ	15692	657	C3	X	2	1	1	2	C2	711031	
HQBN		COL G. R. HERSHEY		1770	37	C2	R	1	1	2	1	C1	711031	
2D ITT	20	WO G. L. ANDERSON												
4TH ITT	20	2DLT R. L. LAMBERT												
6TH ITT	20	MSGT R. L. GONYO												
SCAMP	20													
5TH SSCT		WO D. J. BROWN												
2D MARINES		COL C. B. REDMAN	CAMLEJ			C2	P	2	1	1	2	C1	711130	
HQCO		CAPT G. W. SCHLITZ		255	5	C3		1	1	1	2	C2	711130	
1ST BN		LTCOL A. M. GRAY		1149	36	C2	T	1	1	2	2	C1	710915	8/106MM RR, 8/81 MORT
2D BN	13	LTCOL M. ROJO JR.		974	18	C3	T	2	1	1	3	C2	710930	8/106MM RR, 8/81 MORT
3D BN (-) (32D MAU)	5*	LTCOL T. J. WILLIS	MED	939	32	C1		1	1	1	1			8/106MM RR, 8/81 MORT
SU 1, H&SCO, 3D BN (2D MAR)	*	1STLT J. R. LOWEY	CAMLEJ	22		C4	N	5	5	5	5			
6TH MARINES		COL F. R. KRAINER	CAMLEJ			C2	P	2	1	1	2	C1	711130	
HQCO		CAPT R. J. SNOWDEN		301	6	C2		1	1	2	1	C1	710930	
1ST BN	6	LTCOL T. F. QUALLS	CARIB	921	33	C2	P	2	1	1	1	C1	710930	8/106MM RR, 8/81 MORT
2D BN	15	LTCOL J. T. ENOCH	CAMLEJ	1013	19	C2	T	2	1	1	2	C2	711130	8/106MM RR, 8/81 MORT
3D BN		LTCOL C. F. PITCHFORD		992	34	C2	P	2	1	1	2	C2	711130	8/106MM RR, 8/81 MORT
8TH MARINES		COL E. M. YOUNG	CAMLEJ			C2	P	2	1	1	2	C2	711130	
HQCO		CAPT H. L. SAWYER		264	5	C1		1	1	1	1			
1ST BN		LTCOL J. K. COODY		993	20	C2	P	2	1	1	2	C2	711130	8/106MM RR, 8/81 MORT
2D BN (-) (REIN)	9	LTCOL B. S. PICKETT	GTMO	650	24	C2	P	2	1	1	1	C2	711130	8/106MM RR, 8/81 MORT
CO E, 2D BN		1STLT H. R. WEHUNT	CAMLEJ	181	2	C4	N	5	5	5	5			
3D BN		MAJ J. T. BOHLIN		972	17	C2	P	2	1	1	2	C2	711130	8/106MM RR, 8/81 MORT
10TH MARINES		COL C. R. BURROUGHS	CAMLEJ			C4	P	4	1	1	2	C3	710930	
HQ BTRY		1STLT R. R. HARRIS		232	7	C2	R	1	1	2	1	C1	711130	
1ST BN		LTCOL J. A. LIVINGSTONE		333	10	C3	P	3	1	1	2	C2	711130	18/105 HOW TD
2D BN		MAJ J. W. ROSS		354	10	C3	P	3	1	1	2	C2	711130	18/105 HOW TD
3D BN		LTCOL R. F. MOODY		391	11	C4	P	4	1	1	2	C3	710930	18/105 HOW TD
4TH BN		LTCOL R. F. BELLI		256	7	C4	P	4	1	1	2	C3	710930	1/M-51 VTR, 18/155 HOW SP

* PARENTHETIC UNIT INDICATES OPCON WHEN DIFFERENT FROM ORGANIZATIONAL STRUCTURE.

TAB 21-6

[redacted]

Unclassified

UNCLASSIFIED

SECRE[redacted]

UNCLASSIFIED

MARINE CORPS COMMAND CENTER

STATUS OF FMF UNITS**

22 SEPTEMBER 1971

UNIT	NOTE	UNIT COMMANDER	LOCATION	STRENGTH		UNIT READINESS☆								MAJOR EQUIPMENT
						CURRENT						EXPECTED		
				USMC	USN	RATE	RSN	P	S	R	T	RATE	BY	

☆UNIT READINESS RATING CATEGORY

C-1 FULLY COMBAT READY
C-2 SUBSTANTIALLY COMBAT READY
C-3 MARGINALLY COMBAT READY
C-4 NOT COMBAT READY

☆READINESS ABBREVIATIONS

P PERSONNEL READINESS
S SUPPLIES/EQUIPMENT ON HAND
R EQUIPMENT READINESS
T TRAINING READINESS
X COMMANDERS SUBJECTIVE JUDGEMENT
N RESOURCE ALLOCATION BY COGNIZANT SERVICE DOES NOT PERMIT A HIGHER C-RATING

NOTES

1. BLT 1/4 BREAKDOWN ON TAB 34.
2. 31ST MAU BREAKDOWN ON TAB 34.
3. ABOARD USS AMERICA (CVA-66).
4. ASSIGNED III MAF
5. LANFOR6THPLT 1-71 (32D MAU) BREAKDOWN ON TAB 36.
6. LANFORCARIB 1-71 BREAKDOWN ON TAB 36.
7. VMA(AW)-533 (w/10 A-6A AIRCRAFT) AT NAHA, OKINAWA, FOR TRAINING DURING THE PERIOD 16AUG-15OCT71.
8. H&SCO, CO B, 1ST SP BN IN CADRE STATUS.
9. GTMO BN (REIN) BREAKDOWN ON TAB 36-2.
10. TRUCK CO, 1ST SERV BN (CADRE).
11. CO C, 7TH ENGR BN (CADRE).
12. THIS UNIT IS BOTH ADCON/OPCON TO WERS-17 (-).
13. AIR ALERT BATTALION.
14. PERSONNEL AND EQUIPMENT CARRIED IN HQBN, 1ST MARDIV.
15. VIEQUES TRNG (DET, H&SCO, CO H, 2/6).
16. ABOARD USS SARATOGA (CVA-60).
17. INCLUDES STRENGTH CO D, 7TH ENGR BN AND 1ST PLAT, 1ST BRIDGE CO.
18. H&SCO, CO B, CO C, AND CO D, 1ST TANK BN (CADRE).
19. H&SCO, CO B, AND CO C, 3D AMTRAC BN (CADRE).
20. PERSONNEL AND EQUIPMENT CARRIED IN HQBN, 2D MARDIV.
21. ONE PLATOON IS DEPLOYED WITH LANFOR6THPLT 1-71 AND ALSO ONE PLATOON WTIH LANFORCARIB 1-71.
22. PERSONNEL AND EQUIPMENT CARRIED IN HQBN, 3D MARDIV.
23. PARTICIPATED IN ROPEVAL 3-71 AT CAMPEN DURING THE PERIOD 8-17SEP71. OPCON TO 7TH MAB.
24. UNASSIGNED.
25. ONE PLATOON IS DEPLOYED WITH LANFOR6THPLT 1-71. ONE PLATOON WITH LANFORCARIB 1-71 AND ONE PLATOON WITH THE GTMO BN.
26. UNASSIGNED.
27. THIS UNIT IS BOTH ADCON/OPCON TO MAG-12. HOWEVER, IS PHYSICALLY LOCATED ON OKINAWA WITH THEIR STRENGTH CARRIED UNDER OKINAWA.
28. UNASSIGNED.
29. TWO OFF & 32 ENL DEPLOYED TO MOROCCO & 1 OFF & 10 ENL DEPLOYED TO GTMO ON A PERMANENT BASIS.
30. BLT 3/4 (3D BN, 4TH MAR, AND BTRY I (REIN), 3D BN, 12TH MAR) AT FUJI FOR TRAINING DURING THE PERIOD 18AUG-10CT71.
31. ABOARD USS CORAL SEA (CVA-43).

** SOURCE: MARES FORSTAT REPORT DATED 7 SEPTEMBER 1971.

UNCLASSIFIED

TAB 21-9

Unclassified

[redacted]

MARINE CORPS COMMAND CENTER

22 SEPTEMBER 1971

UNCLASSIFIED

FLEET MARINE FORCE DISPOSITION

VMA(AW)-224 (12/A6A A/C) (7)
ABOARD USS CORAL SEA (CVA-43)
AT ALAMEDA, CALIFORNIA

LANFOR6THFLT 2-71 (1)
34TH MAU
* BLT 1/2
HMM-264
ENROUTE ROTA, SPAIN

LANFOR6THFLT 1-71 (4)
32D MAU
BLT 3/2
HMM-162
AT BARCELONA, SPAIN

7TH MAB (2)
HQ, 7TH MAB
7TH MARINES
BLT 2/1
PROV MAG-50
AT CAMPEN

DET A, VMCJ-2 (4/EA-6A A/C) (5)
ABOARD USS SARATOGA (CVA-60)
OPS WESTERN MED

VMFA-333 (12/F-4J A/C) (3)
ABOARD USS AMERICA (CVA-66)
AT ATHENS, GREECE

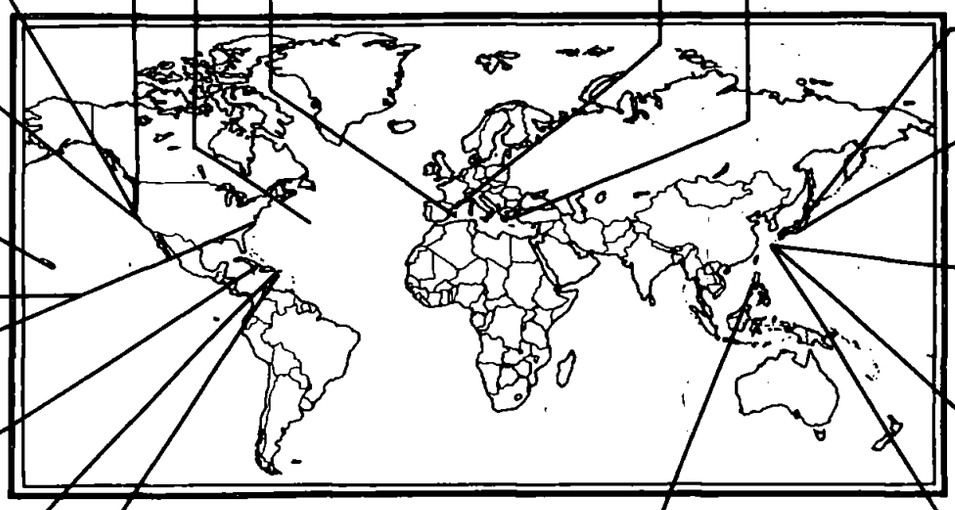

I MAF
1ST MARDIV (-)(REIN)
FORTRPS, FMFPAC
3D MAW

JAPAN
1ST MAW

FUJI TRAINING
BLT 3/4
(18AUG-10CT71)

HQ, FMFPAC
1ST MARBDE
3D MAR (-)(REIN)
MAG-24

BLT 1/4
AT OKINAWA
(STAND-DOWN STATUS)

LANFORCARIB 2-71 (8)
BLT 2/6
AT CAMLEJ

HQ, FMFLANT
2D MARDIV (-)(REIN)
FORTRPS, FMFLANT
2D MAW

OKINAWA
III MAF
3D MARDIV (-)(REIN)
MAG-36

GTMO BN (-) (REIN)
2D BN, 8TH MAR
BTRY B, 1/10
2 PLATS, 2D TANK BN
DET, FSR

NAHA TRAINING
VMA(AW)-533
(16AUG-15OCT71)

LANFORCARIB 1-71 (9)
BLT 1/6
AT VIEQUES, P.R.

8TH MAB (1)
HQ, 8TH MAB
* BLT 1/2 (LANFOR6THFLT 2-71)
BLT 3/6
PROV MAG-40

LANFOR7THFLT (6)
31ST MAU
BLT 2/9
HMM-164
AT SUBIC BAY, R.P.I.

VIEQUES TRAINING
DET, H&SCO, 2/6
CO H, 2D BN, 6TH MAR
AT CAMP GARCIA, P.R.

* BLT 1/2 IS SHOWN AS PART OF THE 8TH MAB AND ALSO AS PART OF THE 34TH MAU. NOTE 1 REFERS.

DISTRIBUTION BY BATTALION/SQUADRON

	INF BNS	VMFA	VMA	VMA(AW)	VMCJ	VMO	VMGR	HMA	HML	HMM	HMH
WESTPAC	6	2	2	1	1	1	1		1	2	1
OKINAWA	(4)						(1)		(1)	(1)	(1)
JAPAN		(2)	(2)	(1)	(1)						
LANDING FORCE	(2)									(1)	
MIDPAC	2	3								1	1
HAWAII	(2)	(3)								(1)	(1)
EASTPAC	10	4	2	2	1	1	1		1	2	2
EL TORO/SANTA ANA		(4)	(2)	(2)	(1)		(1)			(2)	(2)
CAMPEN	(10)					(1)			(1)		
ATLANTIC	8	4	3	3	1	1	1	1	1	3	2
CAMP LEJEUNE	(6)										
CHERRY POINT		(1)		(3)	(1)		(1)				
BEAUFORT		(3)	(3)								
NEW RIVER						(1)		(1)	(1)	(2)	(2)
QUANTICO										(1)	
CARIBBEAN	(2)										
EUROPE	1									1	
MEDITERRANEAN	(1)									(1)	
GRAND TOTAL	27	13	7	6	3	3	3	1	3	9	6

Unclassified

UNCLASSIFIED

[redacted]

TAB 31-1

MARINE CORPS COMMAND CENTER

22 SEPTEMBER 1971

UNCLASSIFIED

FLEET MARINE FORCE MOVEMENTS

	UNIT	ETD/ATD	FROM	DESTINATION	ETA/ATA
	MOVEMENTS 16 - 22 SEPTEMBER 1971				
(1)	HQ 8TH MAB	20SEP71	CAMP LEJEUNE, NORTH CAROLINA	NAPLES, ITALY	4OCT71
(4)	LANFOR6THFLT 1-71 (32D MAU)	20SEP71	LIVORNO, ITALY	BARCELONA, SPAIN	22SEP71
(1)	LANFOR6THFLT 2-71 (34TH MAU)	18SEP71	MOREHEAD CITY, NORTH CAROLINA	ROTA, SPAIN	30SEP71
	CO H, 2D BN, 6TH MAR	20SEP71	CAMP LEJEUNE, NORTH CAROLINA	VIEQUES, PUERTO RICO	20SEP71
	CO F, 2D BN, 2D MAR	21SEP71	VIEQUES, PUERTO RICO	CAMP LEJEUNE, NORTH CAROLINA	21SEP71
	PROJECTED MOVEMENTS 23 - 29 SEPTEMBER 1971				
(3)	VMFA-333	26SEP71	ATHENS, GREECE	OPS IONIAN SEA	27SEP71
(4)	LANFOR6THFLT 1-71 (32D MAU)	28SEP71	BARCELONA, SPAIN	CARBONERAS, SPAIN	1OCT71
(5)	DET A, VMCJ-2	26SEP71	OPS WESTERN MED	NAPLES, ITALY	27SEP71
(6)	LANFOR7THFLT (31ST MAU)	24SEP71	SUBIC BAY, R.P.I.	ARGOPS SOUTH CHINA SEA	25SEP71

NOTES:

(1) THE 8TH MAB (HQ 8TH MAB, BLT 1/2 (LANFORSIXTHFLT 2-71), BLT 3/6 AND PROV MAG-40) WAS ACTIVATED ON 8JUN71 FOR PLANNING PURPOSES AND ACTIVATED FOR OPERATIONS ON 13SEP71. THE 8TH MAB IS SCHEDULED TO PARTICIPATE IN EXERCISE DEEP FURROW-71, A JOINT AND COMBINED NATO EXERCISE TO BE CONDUCTED DURING THE PERIOD 9-20OCT71 TO INCLUDE AMPHIBIOUS LANDINGS IN TURKISH THRACE BY A COMBINED U.S. AND UNITED KINGDOM/ITALIAN LANDING FORCE. BGEN T. H. MILLER, JR., AWC 2D MAW, IS DESIGNATED AS CG 8TH MAB. HQ 8TH MAB DEPARTED CAMP LEJEUNE ON 20SEP71 ENROUTE TO NAPLES, ITALY. EDA NAPLES IS 4OCT71. THE 34TH MAU (HQ 34TH MAU, BLT 1/2 AND HMM-264) (LANFORSIXTHFLT 2-71) WAS ACTIVATED FOR OPERATIONS ON 1SEP71. THE 34TH MAU WILL CHOP TO CG 8TH MAB ON 9OCT71 FOR PARTICIPATION IN EXERCISE DEEP FURROW-71 ONLY. THE 34TH MAU WILL RELIEVE THE 32D MAU AS LANFORSIXTHFLT ON 30SEP71. THE 34TH MAU DEPARTED MOREHEAD CITY, NORTH CAROLINA, ON 18SEP71 ENROUTE TO ROTA, SPAIN. EDA ROTA IS 30SEP71.

(2) THE 7TH MAB (HQ 7TH MAB, 7TH MARINES (w/2/7, 3/7 & 1/3), 3D BN, 11TH MAR (-), BLT 2/1 (LANFOR-RESERVES) AND PROV MAG-50) PARTICIPATED IN ROPEVAL 3-71 DURING THE PERIOD 8-17SEP71 IN THE CAMP PENDLETON/CLEVELAND NATIONAL FOREST AREAS. THE 7TH MAB WAS ACTIVATED FOR PLANNING ON 1JUL71 AND FOR EMBARKATION AND OPERATIONS ON 7SEP71. ROPEVAL 3-71 WAS A MAB SIZE AMPHIBIOUS EXERCISE. LANDING FORCE OPERATIONS WERE DESIGNED TO TRAIN FORCES IN THE PLANNING AND EXECUTION OF AMPHIBIOUS OPERATIONS INVOLVING THE TECHNIQUE OF STAND-OFF AMPHIBIOUS ASSAULT AND ASPECTS OF THE SEA-BASING CONCEPT. THE 3D BN, 1ST MAR, AND VMA(AW)-242 WERE DESIGNATED AS THE AGGRESSOR FORCES. THE 7TH MAB IS SCHEDULED TO BE DEACTIVATED ON 1OCT71.

(3) AT ATHENS, GREECE, FOR UPKEEP DURING THE PERIOD 15-27SEP71. SCHEDULED FOR OPERATIONS IN THE IONIAN SEA (28-30SEP71).

(4) AT BARCELONA, SPAIN (22-28SEP71), FOR PORT VISIT. ENROUTE CARBONERAS, SPAIN (29-30SEP71), TO PARTICIPATE IN A TURNAWAY LANDING EXERCISE (1-2OCT71) TO TEST AMPHIBIOUS EMBARKATION AND LOADING PLANS.

(5) CONDUCTING OPERATIONS IN THE WESTERN MED DURING THE PERIOD 17-26SEP71. SCHEDULED FOR A PORT VISIT AT NAPLES, ITALY (27SEP-6OCT71).

(6) CONDUCTING UPKEEP AT SUBIC BAY, R.P.I., DURING THE PERIOD 17-24SEP71. SCHEDULED FOR ARGOPS IN THE SOUTH CHINA SEA (25-30SEP71).

(7) VMA(AW)-224 (w/12 A6A A/C), ABOARD THE USS CORAL SEA (CVA-43), IS CONDUCTING PRE-WESTPAC CRUISE READINESS TRAINING DURING THE PERIOD 20SEP-20OCT71. THE USS CORAL SEA IS SCHEDULED TO DEPART ALAMEDA, CALIFORNIA, ENROUTE WESTPAC ON 12NOV71.

(8) BLT 2/6 (LANFORCARIB 2-71) WAS ACTIVATED FOR PLANNING ON 10SEP71 AND FOR OPERATIONS ON 17DEC71. BLT 2/6 IS SCHEDULED TO DEPLOY AS LANFORCARIB 2-71 DURING THE PERIOD 27DEC71-30JUN72.

(9) CONDUCTING TRAINING ASHORE AT VIEQUES, PUERTO RICO, DURING THE PERIOD 23SEP71-1OCT71.

UNCLASSIFIED

Unclassified

[redacted]

UNCLASSIFIED

MARINE CORPS COMMAND CENTER

FMF PACIFIC UNIT LOCATIONS AND STRENGTHS AND OSD CEILING CONSIDERATIONS (WESTPAC)

22 SEPTEMBER 1971

RVN

USMC TRANSITIONAL SUPPORT FORCE

NAVFORV	3
HQ STAFF MACV	49
JUSPAO	4
SAE	2
NAVADVGRU	76
SOG	12
DEF COM AGCY	5
SU #1, 1ST ANGLICO	175
EMBASSY SECURITY	156
CORDS	5
DET, H&HS-18	20
DOD SPEC REP	3
ROK LOG TEAM	13
CREDIT ACCOUNT	4
WESTPAC TRANS OFF	1
TOTAL - OSD PROGRAM XIV SPACE AUTHORIZATION	528

	USMC	USN
OSD PROGRAM XIV SPACE AUTHORIZATION	528	
SUB UNIT 1, 1ST ANGLICO	185	10
MACV STAFF/MACV FIELD	171	
NAVADVGRU/MACV UNITS	22	
OTHERS	151	
TOTAL RVN STRENGTH AS OF 16SEP71.	529	10

OKINAWA

III MAF (TF-79)

HQ, III MAF

3D MARDIV (-) (REIN) (TF-79.2)

HQ, 3D MARDIV (-)(REIN)
- 4TH MARINES
  - 1/4 (BLT)
  - 2/4
  - 3/4
- 9TH MARINES
  - 1/9
  - 2/9 (31ST MAU)
  - 3/9

1ST MAW

MAG-36

VMGR-152	(KC-130F)
VMO-6 (-)	(OV-10A)
HMH-462	(CH-53D)
HMM-164	(CH-46D/CH-53D/UH-1E)(31ST MAU)
HMM-165	(CH-46D)
HML-367	(UH-1E)

3D FSR

	USMC	USN
(1) OSD PROGRAM XIV SPACE AUTHORIZATION	19,249	934
OKINAWA STRENGTH RECAPITULATION		
III MAF		
HQ, III MAF	131	
3D MARDIV (-)(REIN)	12,364	560
1ST MAW ELEMENTS	2,303	24
3D FSR	2,787	41
(2) TOTAL III MAF	17,585	625

JAPAN

1ST MAW (TF-79.3)

HQ, 1ST MAW

MAG-12

VMA-211	(A-4E)
VMA-311	(A-4E)
VMA(AW)-533	(A-6A)

MAG-15

VMFA-115	(F-4B)
VMFA-232	(F-4J)
VMCJ-1	(EA-6A/RF-4B)

	USMC	USN
(3) OSD PROGRAM XIV SPACE AUTHORIZATION	7,000	
JAPAN STRENGTH RECAPITULATION		
HQ, 1ST MAW	695	37
1ST MAW	4,930	51
TOTAL 1ST MAW	5,625	88

NOTES
(1) THIS FIGURE INCLUDES 459 NON-FMF SPACES NOT REFLECTED BELOW.
(2) LESS ONE MAU AFLOAT AND CHARGEABLE TO COMSEVENFLT.
(3) THIS FIGURE INCLUDES 921 NON-FMF SPACES NOT REFLECTED BELOW.

SOURCES: RVN STRENGTH: COMUSMACV WEEKLY STRENGTH REPORT MSG 180700ZSEP71.

OKI/JAPAN STRENGTH: MARES FORSTAT REPORT DATED 7SEP71.

UNCLASSIFIED

Unclassified

[redacted]

TAB 33

[redacted]

MARINE CORPS COMMAND CENTER

UNCLASSIFIED

FMF ATLANTIC UNIT LOCATIONS AND STRENGTHS*

22 SEPTEMBER 1971

EAST COAST

FMFLANT

HQ, FMFLANT (NORFOLK)

2D MARDIV

HQ, 2D MARDIV (CAMLEJ)

2D MARINES
- 1/2 (LANFOR6THFLT 2-71)(34TH MAU)
- 2/2
- 3/2 (LANFOR6THFLT 1-71)(32D MAU)

6TH MARINES
- 1/6 (LANFORCARIB 1-71)
- 2/6
- 3/6

8TH MARINES
- 1/8
- 2/8 (GTMO BN (-) (REIN))
- 3/8

FORTRPS FMFLANT

HQ, FORTRPS (CAMLEJ)

2D MAW

HQ, 2D MAW (CHERRY POINT)

MAG-14 (CHERRY POINT)
- VMCJ-2 (RF-4F/EA-6A)
- VMA(AW)-121 (A-6A)
- VMA(AW)-224 (A-6A) (USS CORAL SEA (CVA-43))
- VMFA-312 (F-4B)
- VMA(AW)-332 (A-6A)

MWSG-27 (CHERRY POINT)
- VMGR-252 (KC-130F)

MCCRTG-20 (CHERRY POINT)
- VMFAT-201 (F-4B/J)
- VMAT(AW)-202 (A-6A/TC-4C)
- VMT-203 (TA-4F/J)

MAG-31 (BEAUFORT)
- VMFA-251 (F-4B/J)
- VMFA-333 (F-4J) (USS AMERICA (CVA-66))
- VMFA-451 (F-4J)

MAG-32 (BEAUFORT)
- VMA-324 (A-4E/M)
- VMA-331 (A-4E)
- VMA-513 (AV-8A)

MAG-26 (NEW RIVER)
- VMO-1 (OV-10A)
- HML-167 (UH-1E/N)
- HMM-162 (CH-46F/CH-53D/UH-1E)(LANFOR6THFLT 1-71)(32D MAU)
- HMM-261 (CH-46F)
- HMM-264 (CH-46F/CH-53D/AH-1J)(LANFOR6THFLT 2-71)(34TH MAU)
- HMM-263 (CH-46D/F) (QUANTICO)
- HMH-461 (CH-53A/D)
- HMH-362 (CH-53D)
- HMA-269 (UH-1E/N/AH-1J)

MHTG-40 (NEW RIVER)
- HMHT-401 (CH-53D)
- HMMT-402 (CH-46F)

2D FSR

FMFLANT STRENGTH RECAPITULATION	USMC	USN
HQ, FMFLANT	806	4
2D MARDIV	15,692	657
FORTRPS, FMFLANT	5,117	135
2D MAW	14,605	203
2D FSR	2,041	23
GRAND TOTAL FMFLANT	38,261	1,022

* SOURCE: MARES FORSTAT REPORT DATED 7SEP71.

TAB 35

UNCLASSIFIED [redacted]

Unclassified

[redacted]

UNCLASSIFIED

MARINE CORPS COMMAND CENTER 22 SEPTEMBER 1971

USMC/ENEMY CASUALTIES IN RVN

USMC BATTLE CASUALTIES

KIA/DOW	WIA (EVAC)	WIA (RTD)	MIA/PW
12,923	51,356	37,162	80/23

USMC CASUALTY FIGURES ARE PROVIDED DAILY BY HQMC CASUALTY SECTION (CODE DNA) AND REFLECT ALL CASUALTIES REPORTED AS OF 15SEP71.

USMC NON-BATTLE CASUALTIES

DEAD	INJURED	MISSING
1,678	1,935	12

FIGURES INDICATED AS INJURED ARE ONLY THOSE IN SERIOUS/CRITICAL INJURY OR DISEASE CATEGORY AND DO NOT INCLUDE THOSE OF A MINOR NATURE

USMC INFLICTED ENEMY CASUALTIES

KIA	PW	WPNS
86,535	4,098	22,879

TYPICAL DISPOSITION OF 100 USMC WIA

100

- 42 — Treated in field & returned to duty
- 58 — Admitted to hospital

→ 58

- 9 — Treated & returned to duty in SVN
- 49 — Evacuated from SVN

→ 49

- 28 — Treated in WestPac & returned to duty
- 21 — Evacuated to CONUS hospital

→ 21

- 6 — Treated & returned to full duty
- 7 — Physical disability separation
- 2 — Dies of wounds
- 6 — Other (long term treatment, etc.)

TAB 45-1

[redacted]

UNCLASSIFIED

Unclassified

UNCLASSIFIED

Department of Defense

NUMBER OF CASUALTIES INCURRED BY U. S. MILITARY PERSONNEL
IN CONNECTION WITH THE CONFLICT IN VIET-NAM

Cumulative from January 1, 1961 through September 11, 1971

22 SEPTEMBER 1971

	Army	Navy *	Marine Corps	Air Force	Total
A. CASUALTIES RESULTING FROM ACTIONS BY HOSTILE FORCES					
1. Killed	25,164	1,050	11,465	455	38,134
2. Wounded or Injured					
a. Died of wounds	3,489	140	1,449	44	5,122
b. Nonfatal wounds					
Hospital care required	96,064	4,086	51,356	814	152,320
Hospital care not required	103,971	5,840	37,162	2,296	149,269
3. Missing					
a. Died while missing	1,643	182	5	395	2,225
b. Returned to control	48	7	6	26	87
c. Current missing	256	113	81	560	1,010
4. Captured or Interned					
a. Died while captured or interned	15	-	3	2	20
b. Returned to control	56	3	5	6	70
c. Current captured or interned	63	144	23	235	465
5. Deaths					
a. From aircraft accidents/incidents					
Fixed Wing	89	155	139	696	1,079
Helicopter	2,241	62	429	59	2,791
b. From ground action	27,981	1,155	12,354	141	41,631
TOTAL DEATHS a/	30,311	1,372	12,922	896	45,501
B. CASUALTIES NOT THE RESULT OF ACTIONS BY HOSTILE FORCES					
6. Current Missing	130	-	12	-	142
7. Deaths					
a. From aircraft accidents/incidents					
Fixed Wing	250	172	45	279	746
Helicopter	1,696	52	242	18	2,008
b. From other causes	4,754	609	1,391	261	7,015
TOTAL DEATHS	6,700	833	1,678	558	9,769

a/ Sum of lines 1, 2a, 3a and 4a.

*Navy figures include a small number of Coast Guard casualties.

Department of Defense
OASD (Comptroller)
Directorate for Information Operations
September 15,1971

TAB 45-2

UNCLASSIFIED

Unclassified

[redacted]

MARINE CORPS COMMAND CENTER

22 SEPTEMBER 1971

DISPOSITION AND STRENGTH OF MAJOR US AND FW FORCES IN RVN

UNCLASSIFIED

DISPOSITION

MR RECAP

MR I*		XXIV CORPS
220 MILES LENGTH@		30-75 MILES WIDTH
14,600 SQ MI AREA		2,860,300 CIV POP
		101ST ABN DIV (AM)
USA	19 BNs	23D INF DIV(AMERICAL)
ARVN	36 BNs	2D ROKMC BDE
ROKMC	4 BNs	147TH VNMC BDE
VNMC	6 BNs	258TH VNMC BDE
ARVN CAV	4 BNs	1ST ARVN DIV
		2D ARVN DIV
TOTAL	69 BNs	

MR II*		SRAG (NHA TRANG)
315 MILES LENGTH@		45-130 MILES WIDTH
31,300 SQ MI AREA		2,898,200 CIV POP
USA	3 BNs	
ARVN	32 BNs	ROK CAP INF DIV
ROK	18 BNs	9TH ROK DIV
ARVN CAV	3	22D ARVN DIV
TOTAL	56 BNs	23D ARVN DIV

MR III*		TRAC (LONG BINH)
90 MILES LENGTH@		55-115 MILES WIDTH
10,100 SQ MI AREA		5,133,000 CIV POP
USA	5 BNs	2D BDE, 25TH INF DIV
ARVN	54 BNs	1ST AUSTRALIAN TF
AUSTRALIA	2 BNs	ROYAL THAI VOL REGT
THAILAND	3 BNs	1ST CAV DIV (AM)
ARVN CAV	5 BNs	5TH ARVN DIV
VNMC	3 BNs	18TH ARVN DIV
		25TH ARVN DIV
TOTAL	72 BNs	369TH VNMC BDE
		1ST ARVN ABN DIV

MR IV*		DRAC (CAN THO)
195 MILES LENGTH@		35-115 MILES WIDTH
14,600 SQ MI AREA		5,700,1000 CIV POP
ARVN	41 BNs	7TH ARVN DIV
ARVN CAV	5 BNs	9TH ARVN DIV
		21ST ARVN DIV
TOTAL	46 BNs	

@ Coastal Arc

* See RVN Recap note

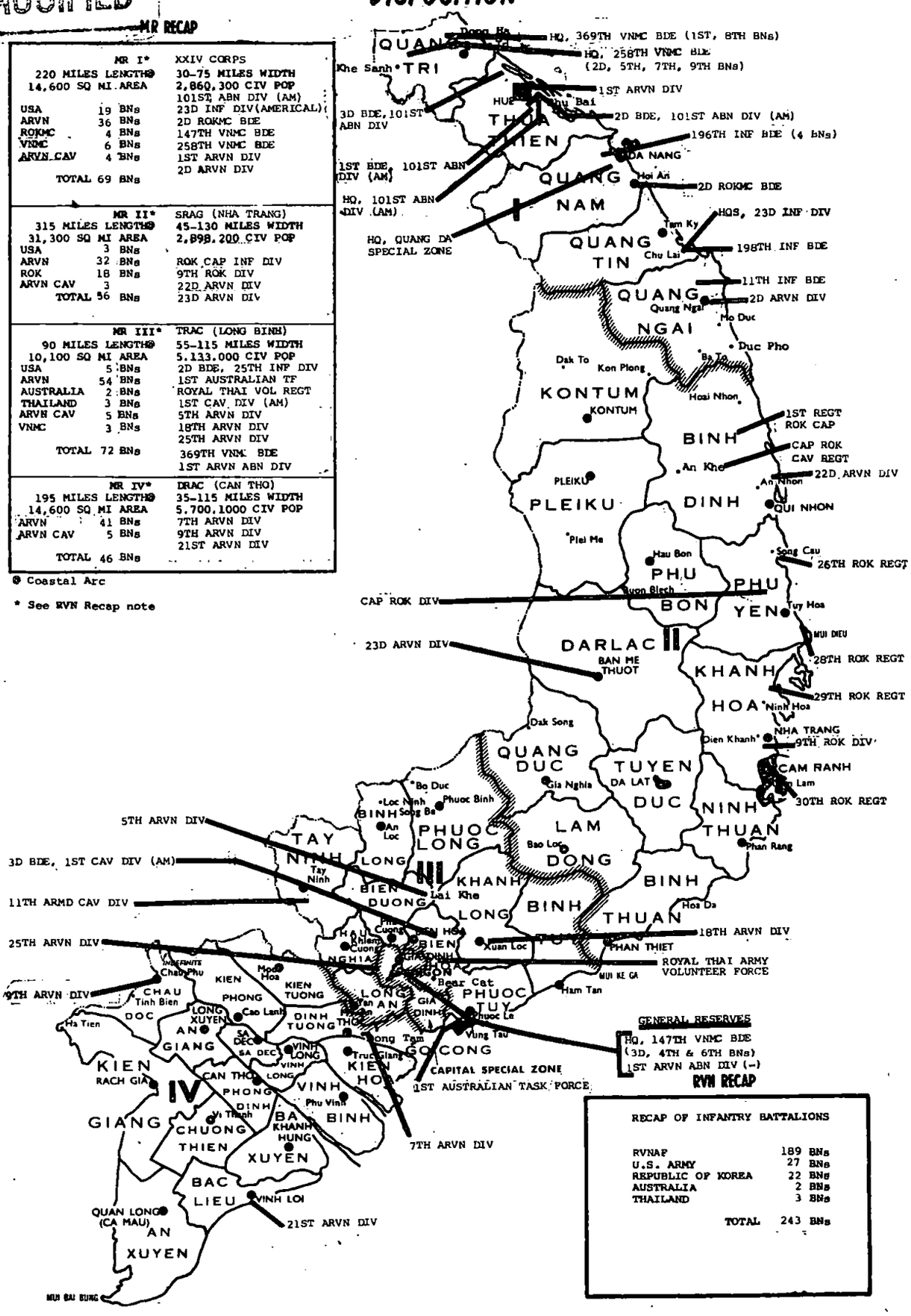

TAB 46-1

[redacted]

Unclassified

UNCLASSIFIED

[redacted] MARINE CORPS COMMAND CENTER

UNCLASSIFIED

STRENGTHS*

22 SEPTEMBER 1971

RVN ARMED FORCES (RVNAF)

ARMY (ARVN)	412,549
NAVY (VNN)	41,259
AIR FORCE (VNAF)	51,192
MARINE CORPS (VNMC)	13,646
REGIONAL FORCES (RF)	290,979
POPULAR FORCES (PF)	248,299
TOTAL RVNAF	1,057,924

UNITED STATES FORCES

ARMY	169,628
NAVY	9,863
AIR FORCE	35,434
MARINE CORPS	529
COAST GUARD	101
TOTAL U.S.	215,555

FREE WORLD MILITARY ASSISTANCE FORCES (FWMAF)

REPUBLIC OF KOREA	48,400
AUSTRALIA	6,012
PHILIPPINES	81
THAILAND	6,362
NEW ZEALAND	269
REPUBLIC OF CHINA	31
SPAIN	6
TOTAL FWMAF	61,161

TOTAL FORCES IN RVN 1,334,640

★ SOURCE: RVNAF - MACV MONTHLY RPT OF GVN STRENGTH AS OF 31JUL71.
ALL OTHERS - MACV WEEKLY STRENGTH RPT AS OF 2400, 16SEP71.

UNCLASSIFIED

Unclassified

TAB 46-2

[redacted]

SECRET
UNCLASSIFIED

MARINE CORPS COMMAND CENTER

REPUBLIC OF KOREA MARINE CORPS

22 SEPTEMBER 1971

Commandant: General LEE, HYUNG MOON

Senior Marine Advisor: Colonel Howard T. PITTMAN, USMC

Strength: 32,360 (JUN71)

The Headquarters of the Republic of Korea Marine Corps (ROKMC) is located in Seoul. Marine Barracks are located in Seoul and the major Naval Bases at Inchon, Mokpo, Chejudo, Chinhae, Pusan, and Mukho. The ROKMC Supply and Maintenance Depot as well as the ROK Marine Schools Base are located at Chinhae. The Schools Base offers Recruit Training, NCO School, Supply School, LVT School, Officer Candidate Course, Drill Instructor School, Senior Amphibious Warfare School, English Language Training, and the ROKMC Command and Staff College. The ROK Marine Corps Amphibious Base at Pohang houses the 1st ROKMC Division (-), Special Training Unit to support ROK Marine personnel assigned to the 2d ROKMC Brigade (Blue Dragons) in Vietnam. The ROKMC is operationally organized as indicated below:

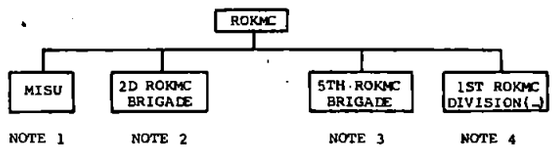

NOTE 1: Marine Island Security Unit (MISU) is a defense force approximating a reinforced Infantry Battalion in size and weaponry. It is located on the offshore islands of the Westerly extension of the DMZ mandated to the United Nations. Although it is administratively controlled by HQ, ROKMC, it is under the operational control of Commander, ROK Fleet. The organization of the MISU is indicated on Chart 1.

NOTE 2: The 2d ROK Marine Brigade is deployed to the Republic of Vietnam and organization is indicated on Chart 2.

NOTE 3: The 5th ROK Marine Brigade is currently deployed in a defensive role along the DMZ on the Kimpo Peninsula. It is administratively controlled by HQ, ROKMC but is under the operational control of I Corps (Group), Eighth U. S. Army. It is considered the Brigade would be fixed in position in the event of open hostilities in Korea and could not be readily redeployed without major adjustment in combat unit locations within the the United Nation Command during peacetime. The Brigade was initially formed from the assets of the list ROKMC Division and represents those units which the division is minus at this time. The current organization of the 5th Brigade is indicated on Chart 3.

NOTE 4: The 1st ROKMC Division (-) located at Pohang is administratively controlled by HQ, ROKMC and under the operational control of Commander, Naval Forces Korea. It is designated as the strategic Reserve for the Defense of the ROK. The organization for the Division (-) is indicated on Chart 4. It should be noted that the Amphibian Tractor Battalion is presently equipped with the LVT-3C.

MARINE ISLAND SECURITY UNIT (MISU)

COMMANDING OFFICER:
BGEN HUR HONG

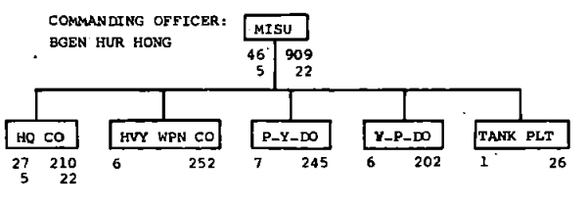

CHART #1

5TH ROK MARINE BRIGADE

COMMANDING GENERAL:
BGEN KIM, Suk Ku

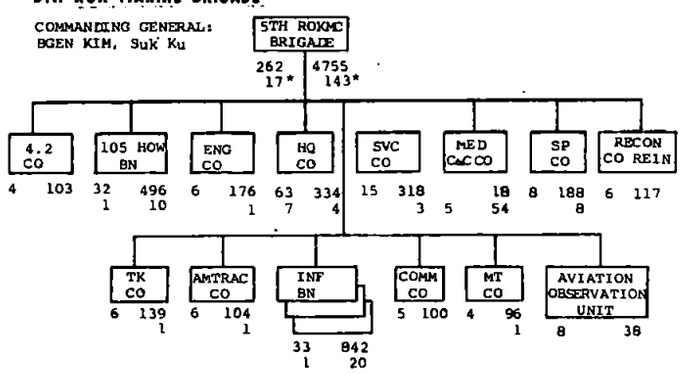

CHART #3

2D ROK MARINE BRIGADE

Strength: 6,145 (SEP71)

COMMANDING GENERAL:
MGEN LEE, Dong Yong

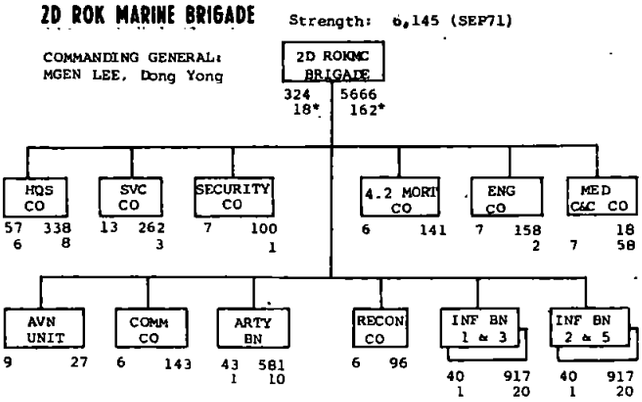

CHART #2

* Second line of figures under each block indicates ROK Navy personnel.
** Minus includes 1 Co Tanks assigned 5th Brigade and 1 Platoon Tanks attached MISU.

FIRST ROK MARINE DIVISION (-)

COMMANDING GENERAL:
MGEN KIM, YUN SANG

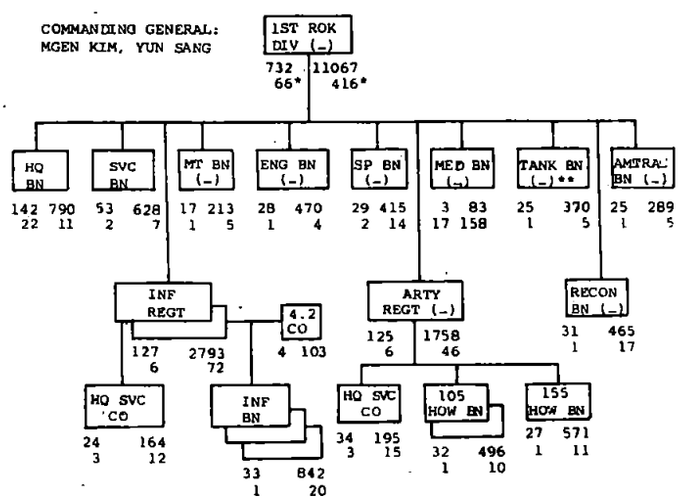

CHART #4

TAB 48-1

Unclassified
UNCLASSIFIED

UNCLASSIFIED

MARINE CORPS COMMAND CENTER

TABLE OF CONTENTS

29 SEPTEMBER 1971

	LIST OF EFFECTIVE TABS	DATE OF LATEST CHANGE
SECTION I - MARINE CORPS FORCES - WORLD WIDE		
ALLOCATION OF MARINE CORPS PERSONNEL	11	15SEP71
SELECTED PERSONNEL AND AIRCRAFT DATA	12	29SEP71
UNITED STATES MARINE CORPS RESERVE	13-1	30DEC70
	13-2	23DEC70
	13-3	4AUG71
	13-4	23DEC70
MISCELLANEOUS NON-FMF UNITS	14-1	8SEP71
(MARINE BARRACKS)	14-2	22SEP71
(MARINE SECURITY GUARD BATTALION)	14-3	14APR71
(MARINE DETACHMENTS AFLOAT)	14-4	14APR71
	14-5	30JUN71
SECTION II - STATUS OF FLEET MARINE FORCES		
STATUS OF FMF UNITS	21-1	15SEP71
	21-2	15SEP71
	21-3	29SEP71
	21-4	29SEP71
	21-5	22SEP71
	21-6	29SEP71
	21-7	15SEP71
	21-8	29SEP71
	21-9	29SEP71
RECAPITULATION OF FMF ACTUAL STRENGTHS	22	15SEP71
DISTRIBUTION OF MAJOR GROUND EQUIPMENT AND AIRCRAFT	23	29SEP71
SECTION III - DISPOSITION OF FLEET MARINE FORCE UNITS		
FLEET MARINE FORCE DISPOSITION, DISTRIBUTION BY BATTALION/ SQUADRON AND MOVEMENTS	31-1	29SEP71
	31-2	29SEP71
FMF PACIFIC UNIT LOCATIONS AND STRENGTHS (MIDPAC/EASTPAC)	32	15SEP71
FMF PACIFIC UNIT LOCATIONS, STRENGTHS AND OSD CEILING CONSIDERATIONS (WESTPAC)	33	29SEP71
LANDING FORCES - 7TH FLEET	34	15SEP71
FMF ATLANTIC UNIT LOCATIONS AND STRENGTHS	35	22SEP71
LANDING FORCES - MEDITERRANEAN AND CARIBBEAN	36-1	15SEP71
GUANTANAMO BAY BATTALION	36-2	15SEP71
SECTION IV - GENERAL		
CHRONOLOGY OF SIGNIFICANT EVENTS	41-1	17MAR71
	41-2	21APR71
	41-3	23JUN71
	41-4	16JUN71
	41-5	1SEP71
USMC/ENEMY CASUALTIES IN RVN; CUMULATIVE DOD CASUALTY FIGURES ON U.S. MILITARY PERSONNEL AND COMPARATIVE USMC/ENEMY KIA IN CONNECTION WITH THE CONFLICT IN RVN	45-1	22SEP71
	45-2	29SEP71
	45-3	26MAY71
	45-4	1SEP71
DISPOSITION AND STRENGTH OF MAJOR U.S. AND FW FORCES IN RVN	46-1	29SEP71
	46-2	29SEP71
COMUSMACV STAFF, PRINCIPAL MARINE OFFICERS HQ MACV	47	1SEP71
REPUBLIC OF KOREA MARINE CORPS	48-1	29SEP71
REPUBLIC OF VIETNAM MARINE CORPS	48-2	7JUL71
VIETNAM GEOGRAPHIC AND CLIMATE DATA	49-1	18NOV70
	49-2	18NOV70
CHRONOLOGY OF FMF DEPLOYMENT AND STRENGTH IN RVN	410-1	20JAN71
	410-2	25NOV70
	410-3	25NOV70
	410-4	25NOV70
	410-5	25NOV70
	410-6	25NOV70
	410-7	9DEC70
	410-8	10MAR71
	410-9	19MAY71
	410-10	23JUN71
	410-11	21JUL71
	410-12	21JUL71

CONTENTS OF THIS PUBLICATION
DOWNGRADED AT 3 YEAR INTERVALS
DECLASSIFIED AFTER 12 YEARS
DOD DIR 5200.10

UNCLASSIFIED

Unclassified

[redacted]

MARINE CORPS COMMAND CENTER

SELECTED PERSONNEL AND AIRCRAFT DATA

UNCLASSIFIED

PERSONNEL

29 SEPTEMBER 1971

		STRENGTH	PERCENT USMC	PERCENT FMF	PERCENT FMFPAC
USMC TOTAL	*	206,489	100.00		
FLEET MARINE FORCES		98,137	47.53	100.00	
FMF ATLANTIC	#	38,261	18.53	38.99	
FMF PACIFIC	#	59,876	29.00	61.01	
VIETNAM	¢	533	00.26		

SOURCE: * HQMC 1080-20 (ESTIMATED PERSONNEL DATA) AS OF 31AUG71.
MARES FORSTAT REPORT DATED 7SEP71.
¢ MACV WEEKLY STRENGTH REPORT AS OF 23SEP71.

AIRCRAFT

		FIXW	HELO	TOTAL	PERCENT USMC	PERCENT FMF	PERCENT FMFPAC
USMC TOTALS	**	771	607	1,378	100.00		
FLEET MARINE FORCES	●	677	556	1,233	89.48	100.00	
FMF ATLANTIC	●	300	255	555	40.34	45.01	
FMF PACIFIC	●	377	301	678	49.14	54.99	

SOURCE: ** DC/S AIR STATUS BOARD PHOTO AS OF 10AUG71.
● MARES FORSTAT REPORT DATED 7SEP71.

UNCLASSIFIED
~~CONFIDENTIAL~~

Unclassified

TAB 12

[redacted] UNCLASSIFIED

MARINE CORPS COMMAND CENTER

STATUS OF FMF UNITS**

29 SEPTEMBER 1971

UNIT *	NOTE	UNIT COMMANDER	LOCATION	STRENGTH USMC	STRENGTH USN	UNIT READINESS ☆ CURRENT RATE	RSN	P	S	R	T	EXPECTED RATE	EXPECTED BY	MAJOR EQUIPMENT
MAG-15		COL R. R. MILLER	IWAKUNI			C2	T	2	2	2	2	C2	711109	
H&MS-15		MAJ J. E. HERLOCKER		620		C2	R	1	1	2	1	C1	711001	4/TA-4F
MABS-15		MAJ R. L. BECKWITH		351	21	C2	R	2	1	2	2	C2	711028	
MATCU-60 (MAG-15)	*	CAPT D. L. HENDRIX		57		C2	P	2	1	2	2	C1	711001	
VMFA-115		LTCOL R. R. POWELL	CUBI PT.	265	1	C2	P	2	2	2	2	C2	711128	14/F-4B
VMFA-232		LTCOL J. L. GREGORCYK	IWAKUNI	295	1	C2	T	2	1	2	2	C1	711115	16/F-4J
VMCJ-1 (1ST MAW)	*	LTCOL S. S. EISENHAUER		347	1	C3	T	2	2	2	3	C2	711006	5/EA-6A, 9/RF-4B
MWSG-17		COL W. G. MCCOOL	IWAKUNI			C3	R	1	2	3	2	C2	711001	
H&MS-17		LTCOL W. R. LIMBACH		560	6	C3	R	1	2	3	2	C2	711001	5/C-117D, 3/C-54D/R/S
WERS-17 (-)		MAJ A. L. FRUCCI		213		C2	R	1	2	2	2	C1	711110	
OKINAWA (1ST MAW ELEMENTS)				2645	27									
MAG-36		COL A. F. GARROTTO	FUTEMA			C2	R	1	2	2	1	C2	710924	
H&MS-36 (-)		LTCOL D. A. SPURLOCK		505		C2	S	1	2	2	1	C1	711201	9/CH-46D, 2/UH-1E
SU 1, H&MS-36 (-)		MAJ F. W. CRONE		52		C2	R	1	1	2	1	C1	710911	4/AH-1J
MABS-36		LTCOL V. J. GUINEE JR.		430	21	C4	P	4	1	2	2	C3	711120	
MATCU-66 (MAG-36)	*	CAPT K. R. CLARK		55		C2	P	2	1	2	2	C2	711130	
MATCU-68 (MAG-36)	*	WO L. R. COXE		16		C4	P	4	2	2	4	C4	711015	
HMM-164 (31ST MAU)	2*	LTCOL A. J. KETTERING	31ST MAU	281	3	C2	R	1	2	2	1	C1	711015	11/CH-46D, 4/CH-53D, 4/UH-1E
HMM-165		LTCOL P. L. MOREAU	FUTEMA	208		C2	P	2	2	2	1	C1	711015	20/CH-46D
HMH-462 (-)	2	LTCOL D. G. MCDONALD		235		C1		1	1	1	1			19/CH-53D
VMO-6 (-)		LTCOL J. L. NORTON		149		C1		1	1	1	1			12/OV-10A
VMGR-152 (1ST MAW)	*	LTCOL R. W. DUPHINEY		261	1	C4	R	1	4	4	4	C3	711115	6/KC-130F
HML-367 (-)		MAJ R. SANCHO		130		C2	P	2	1	1	1	C1	711001	11/UH-1E
OTHERS														
DET, MASS-2 (-)			FUTEMA											
SU 1, WERS-17 (-)	12	WO E. Q. HICKS		49		C1		1	1	1	1			
SU 1, H&MS-12 (-)	27	CAPT R. D. PITTS	NAHA	47		C2	S	1	2	2	1	C1	711030	
MACS-4		LTCOL R. D. MILLER	FUTEMA	227	2	C3	T	2	1	2	3	C2	710923	
3D FSR		COL R. E. ROEDER JR.	CP FOSTER	2787	41	C3	S	2	3	3	2	C2	710915	
H&S BN		LTCOL J. B. HARRIS SR.		832	20	C3	R	2	3	3	2	C2	710915	
SUPPLY BN		LTCOL J. W. PRIBERG		1046	21	C3	S	2	3	2	2	C2	710915	
NOP, 3D FSR (3D FSR)	*	CAPT C. W. SHIVER		46		C1		1	1	1	1			
MAINT BN		LTCOL H. I. FREY		863		C3	S	2	3	3	2	C2	710915	2/LVTE-1, 1/106MM RR, 1/81 MORT
EASTPAC				29307	860									
FMFPAC														
I MAF		MAJGEN R. T. DWYER JR.	CAMPEN	21		C3	X	2	4	4	2	C2	710901	
1ST MAR DIV (-) (REIN)		MAJGEN R. T. DWYER JR.	CAMPEN	14860	569	C4	P	4	2	3	4	C4	711001	
HQBN (REIN)		COL H. G. ROBINSON		1981	63	C4	P	4	2	3	4	C3	711001	
1ST CIT		CAPT B. B. VORONIN		20		C1		1	1	1	1			
5TH ITT	14	CWO J. E. STANT JR.												
9TH ITT	14	CWO R. L. RUNKLE												
19TH ITT	14	CAPT L. J. JANSEN												
21ST ITT	14	2DLT M. M. LINCOLN												
23D ITT	14	1STLT F. W. SCHAFFER												
25TH ITT	14	CAPT H. K. LEE												
2D SSCT		CWO E. L. HANEY		9		C4	X	1	1	1	1	C3	711101	
SCAMP		CWO A. L. SELLECK JR.		24										
COMM SPT CO, 9TH COMM BN (-)		MAJ R. R. ANDERSON		344		C2	R	1	1	2	1	C2	711101	
1ST CIVIL AFFAIRS GRP (CADRE)		CAPT R. S. GRISCHKOWSKY		22		C4	P	4	1	1	4	C4	711101	
1ST MARINES		COL E. J. BRONARS	CAMPEN			C4	S	3	4	4	3	C3	711001	
HQCO		MAJ R. A. DECKER		179	12	C4	R	1	3	4	2	C3	711110	
1ST BN		LTCOL C. A. BARSTOW		960	29	C3	R	2	2	3	3	C2	711015	8/106MM RR, 8/81 MORT
2D BN	23	LTCOL A. LUKEMAN		970	33	C4	R	2	3	4	2	C2	711101	8/106MM RR, 1/81 MORT
3D BN		LTCOL M. HUNTER		943	32	C4	S	3	4	4	3	C3	711001	8/106MM RR, 8/81 MORT

Unclassified

☆ PARENTHETIC UNIT INDICATES OPCON WHEN DIFFERENT FROM ORGANIZATIONAL STRUCTURE.

TAB 21-3

[redacted] UNCLASSIFIED

[redacted] UNCLASSIFIED

MARINE CORPS COMMAND CENTER

STATUS OF FMF UNITS

29 SEPTEMBER 1971

UNIT *	NOTE	UNIT COMMANDER	LOCATION	STRENGTH USMC	STRENGTH USN	UNIT READINESS☆ CURRENT RATE	RSN	P	S	R	T	EXPECTED RATE	EXPECTED BY	MAJOR EQUIPMENT
3D BN, 3D MARINES (CADRE)		MAJ F. G. HUTCHINSON JR.	CAMPEN	105	2	C4	N	5	4	4	5			7/106MM RR, 8/81MORT
5TH MARINES		COL R. N. BURHANS	CAMPEN			C4	P	4	4	4	4	C4	711101	
HQCO		CAPT J. R. WILLIAMS		145	9	C4	S	2	4	4	4	C4	711001	
1ST BN		MAJ W. T. MACY		477	10	C4	P	4	4	4	4	C4	711001	6/81 MORT
2D BN		MAJ J. A. LINNEMANN		484	5	C4	P	4	4	4	4	C4	711101	
3D BN		CAPT M. B. DARLING		487	8	C4	P	4	4	4	4	C4	711101	
7TH MARINES	23	COL A. A. MONTI	CAMPEN			C3	P	3	1	1	3	C1	711101	
HQCO	23	1STLT P. E. MILLER		232	13	C1		1	1	1	1			
1ST BN (CADRE)		MAJ R. C. HALL		331	8	C4	N	5	1	1	5			8/106MM RR, 8/81 MORT
2D BN	23	LTCOL W. R. SULLIVAN		1088	36	C2	T	1	1	1	2	C1	711101	8/106MM RR, 7/81 MORT
3D BN	23/13	LTCOL R. J. MIXLLE		1077	35	C1		1	1	1	1			8/106MM RR, 8/81 MORT
11TH MARINES (-) (REIN)		COL W. R. GRUBAUGH	CAMPEN			C4	P	4	3	4	4	C4	711001	
HQ BTRY		MAJ J. A. MAGYAR		211	29	C4	P	4	3	4	4	C3	711101	6/107 MORT
1ST BN		LTCOL R. J. HENLEY		555		C4	P	4	2	4	4	C4	711001	18/105 HOW TD
2D BN (CADRE)		MAJ L. E. KOLEBER		210		C4	P	4	4	4	4	C4	711001	11/105 HOW TD
3D BN (REIN)	23	MAJ W. A. HALL		506	6	C2	P	2	1	1	2	C1	711001	18/105 HOW TD
1ST MT BN (REIN)		MAJ E. R. WHITING		247	7	C3	R	2	1	3	2	C2	711101	
CO B (REIN), 9TH MT BN (-)		CAPT R. F. WILLIAMS		73		C2	X	3	1	1	3	C2	711001	
1ST RECON BN		MAJ C. R. DUNNING		242	7	C4	P	4	2	3	4	C4	711001	
1ST FORCE RECON CO		CAPT D. L. COOK		72	3	C4	P	4	1	2	4	C4	711001	
1ST TANK BN (REIN)	18	LTCOL H. G. EDEBOHLS		424	19	C4	P	4	2	2	4	C4	711001	5/M-51 VTR, 7/M-67 TANK, 15/M103 TANK, 25/M48 TANK
CO D, 3D TANK BN (-) (CADRE)														
1ST ENGR BN		MAJ J. T. SCHULTZ		461	6	C4	P	4	3	4	4	C4	711101	
7TH ENGR BN (-) (REIN)	11	MAJ C. N. WALL		377	13	C4	P	4	2	4	4	C4	711111	
1ST BRIDGE CO (-) (CADRE)		1STLT D. N. TAYLOR JR.		50		C4	P	4	1	4	4	C4	711001	
1ST SP BN	8	MAJ F. L. EDWARDS JR.		252	16	C4	P	4	1	2	4	C4	711001	
3D AMTRAC BN (-)	19	MAJ J. P. SENIK		357	17	C4	P	4	2	3	4	C4	711101	5/LVTE-1, 8/LVTP-5 COMD, 70/LVTP-5, 3/LVTR
1ST SERV BN (REIN)	10	COL G. K. REID		873	32	C3	P	3	1	1	3	C2	711101	
1ST SEARCHLIGHT BTRY (CADRE)								5	5	5	5			
7TH SEP BULK FUEL CO (CADRE)								5	5	5	5			
1ST MED BN		LCDR C. A. ROPER (USN)		68	70	C4	P	4	3	4	4	C4	711001	
1ST DENTAL CO		CAPT J. F. KING (USN)		4	49	C3	P	3	2	2	3	C2	711001	
FORCE TROOPS FMFPAC		BGEN P. G. GRAHAM	29 PALMS	1524	70	C4	P	4	2	2	3	C3	711001	
HQCO		MAJ R. J. LUCAS		182	5	C1		1	1	1	1			
PROV MAINT CO, 1ST FSR		MAJ N. B. KYNN		4		C4	P	4	4	4	4	C3	710915	
NOP, 1ST FSR		CAPT T. R. GERIES		40		C1		1	1	1	1			
9TH COMM BN (-)		LTCOL D. J. GARRETT		367	12	C4	P	4	1	2	3	C3	711201	
13TH CIT (FORTRPS FMFPAC)	*	1STLT C. W. WOOD		15		C1		1	1	1	1			
DET 1, 21ST DENTAL CO (-)		CAPT G. W. WALTER (USN)		2	20	C4	S	1	4	4	1	C3	711001	
1ST FAG		LTCOL R. O. GILLICK	29 PALMS	19		C4	P	4	2	2	4	C3	711001	
HQ BTRY, 1ST FAG		1STLT B. J. ROBERTS		129	9	C2	T	1	1	1	2	C1	711201	
1ST 8" HOW BTRY SP (-)		CAPT J. P. FARRELL		128		C3	T	2	1	2	3	C2	711001	1/M-51 VTR, 4/8" HOW SP
1ST 175MM GUN BTRY SP		CAPT M. T. OWENS JR.		65		C4	P	4	1	3	4	C3	711201	1/M-51 VTR, 6/175 GUN SP
3D 175MM GUN BTRY SP		CAPT D. L. ROSENBERG		83		C4	P	4	2	3	4	C3	711201	1/M-51 VTR, 6/175 GUN SP
4TH BN, 11TH MAR (1ST FAG)	*	LTCOL D. W. SANFORD		343	2	C4	P	4	2	3	4	C3	710915	1/M-51 VTR, 18/155 HOW SP
CO A (REIN), 7TH ENGR BN(-)		CAPT P. A. PANKEY	29 PALMS	120		C4	P	4	1	2	3	C3	711201	
3D HOSPITAL CO (CADRE)		LT C. E. MONTGOMERY(USN)		19	22	C4	P	4	3	3	4	C3	711001	

Unclassified

* PARENTHETIC UNIT INDICATES OPCON WHEN DIFFERENT FROM ORGANIZATIONAL STRUCTURE.

TAB 21-4

UNCLASSIFIED

[redacted] UNCLASSIFIED

MARINE CORPS COMMAND CENTER

STATUS OF FMF UNITS**

29 SEPTEMBER 1971

UNIT *	NOTE	UNIT COMMANDER	LOCATION	STRENGTH USMC	STRENGTH USN	UNIT READINESS ☆ CURRENT RATE	RSN	P	S	R	T	EXPECTED RATE	BY	MAJOR EQUIPMENT
MHTG-30		COL R. BIANCHI	SANTA ANA			C1		1	1	1	1			
H&MS-30		MAJ D. G. DUNLAP		298	1	C1		1	1	1	1			6/CH-46F, 2/CH-53A
HMHT-301		MAJ D. A. DALRYMPLE		159		C1		1	1	1	1			9/CH-53A
HMHT-302		LTCOL R. G. RITCHIE		172		C1		1	1	1	1			16/CH-46F
MCCRTG-10		COL R. B. SINCLAIR	YUMA			C2	P	2	2	2	1	C2	711130	
H&MS-10		MAJ G. R. CALLISON		412	5	C1		1	1	1	1			
VMFAT-101		LTCOL T. R. MOORE		336		C3	P	3	2	2	3	C2	711231	23/F-4B
VMAT-102		LTCOL R. D. REID		267	2	C3	P	3	3	2	1	C2	711231	24/A-4E
VMT-103		MAJ G. L. ELLIS		206	4	C3	S	3	2	2	1	C2	711202	13/TA-4F, 5/TA-4J
1ST. FSR		COL H. C. REED	CAMPEN	1350	39	C3	P	3	2	2	3	C2	711001	
H&SBN		MAJ R. E. JOHNSON		521	18	C3	P	3	2	2	3	C2	711001	
SUPPLY BN		MAJ R. J. WEBB		679	21	C2	P	2	2	2	2	C1	711001	
MAINT BN		MAJ A. A. MCVITTY		617		C3	P	3	2	2	3	C2	711001	
EAST COAST														
FMFLANT		LTGEN E. E. ANDERSON	NORFOLK	38261	1022	C1		1	1	1	1			
HQ FMFLANT				806	4									
H&SBN		COL L. H. EVINE		726	4	C2	P	2	1	1	2	C1	711001	
HQ SUDM		LTCOL D. PRUDHOMME		80		C2	X	4	2	1	1	C1	710901	1/C-131F, 1/C-54T, 2/T-28B, 1/UH-34D, 1/US-2A, 2/US-2B
2D MAR DIV		MAJGEN F. E. HAYNES JR.	CAMLEJ	15692	657	C3	X	2	1	1	2	C2	711031	
HQBN		COL G. R. HERSHEY		1770	37	C2	R	1	1	2	1	C1	711031	
2D ITT	20	WO G. L. ANDERSON												
4TH ITT	20	2DLT R. L. LAMBERT												
6TH ITT	20	MSGT R. L. GONYO												
SCAMP	20													
5TH SSCT		WO D. J. BROWN												
2D MARINES		COL C. B. REDMAN	CAMLEJ			C2	P	2	1	1	2	C1	711130	
HQCO		CAPT G. W. SCHLITZ		255	5	C3		1	1	1	2	C2	711130	
1ST BN		LTCOL A. M. GRAY		1149	36	C2	T	1	1	2	2	C1	710915	8/106MM RR, 8/81 MORT
2D BN	13	LTCOL M. ROJO JR.		974	18	C3	T	2	1	1	1	C2	710930	8/106MM RR, 8/81 MORT
3D BN (-) (32D MAU)	5*	LTCOL T. J. WILLIS	MED	939	32	C1		1	1	1	1			8/106MM RR, 8/81 MORT
SU 1, H&SCO, 3D BN (2D MAR)	*	1STLT J. R. LOWEY	CAMLEJ	22		C4	N	5	5	5	5			
6TH MARINES		COL F. R. KRAINCE	CAMLEJ			C2	P	2	1	1	2	C1	711130	
HQCO		CAPT R. J. SNOWDEN		301	6	C2		1	1	2	1	C1	710930	
1ST BN	6	LTCOL T. F. UNALLS	CARIB	921	33	C2	P	2	1	1	1	C1	710930	8/106MM RR, 8/81 MORT
2D BN	15	LTCOL J. T. ENOCH	CAMLEJ	1013	19	C2	T	2	1	1	2	C2	711130	8/106MM RR, 8/81 MORT
3D BN		LTCOL C. F. PITCHFORD		992	34	C2	P	2	1	1	2	C2	711130	8/106MM RR, 8/81 MORT
8TH MARINES		COL E. M. YOUNG	CAMLEJ			C2	P	2	1	1	2	C2	711130	
HQCO		CAPT H. L. SAWYER		264	5	C1		1	1	1	1			
1ST BN		LTCOL J. K. COODY		993	20	C2	P	2	1	1	2	C2	711130	8/106MM RR, 8/81 MORT
2D BN (-) (REIN)	9	LTCOL B. S. PICKETT	GTMO	650	24	C2	P	2	1	1	1	C2	711130	8/106MM RR, 8/81 MORT
CO E, 2D BN		1STLT H. R. WEHUNT	CAMLEJ	181	2	C4	N	5	5	5	5			
3D BN		MAJ J. T. BOWLIN		972	17	C2	P	2	1	1	2	C2	711130	8/106MM RR, 8/81 MORT
10TH MARINES		COL C. R. BURROUGHS	CAMLEJ			C4	P	4	1	1	2	C3	710930	
HQ BTRY		1STLT R. R. HARRIS		232	7	C2	R	1	1	2	1	C1	711130	
1ST BN		LTCOL J. A. LIVINGSTONE		333	10	C3	P	3	1	1	2	C2	711130	18/105 HOW TD
2D BN		MAJ J. W. ROSS		354	10	C3	P	3	1	1	2	C2	711130	18/105 HOW TD
3D BN		LTCOL R. F. MOODY		391	11	C4	P	4	1	1	2	C3	710930	18/105 HOW TD
4TH BN		LTCOL R. F. BELLI		256	7	C4	P	4	1	1	2	C3	710930	1/M-51 VTR, 18/105 HOW SP

Unclassified

* PARENTHETIC UNIT INDICATES OPCON WHEN DIFFERENT FROM ORGANIZATIONAL STRUCTURE.

TAB 21-6

[redacted] UNCLASSIFIED

SECRET UNCLASSIFIED

MARINE CORPS COMMAND CENTER

STATUS OF FMF UNITS **

29 SEPTEMBER 1971

UNIT *	NOTE	UNIT COMMANDER	LOCATION	STRENGTH USMC	STRENGTH USN	UNIT READINESS ☆ CURRENT RATE	RSN	P	S	R	T	EXPECTED RATE	EXPECTED BY	MAJOR EQUIPMENT
MHTG-40		COL R. B. ENGESSER	NEW RIVER			C1		1	1	1	1			
H&MS-40		MAJ J. P. KIZER		253	1	C1		1	1	1	1			
HMHT-401		LTCOL H. D. GRESS JR.		119		C1	X	1	1	1	1	C2	711201	12/CH-53D
HMMT-402		LTCOL W. R. FAILS		154		C1		1	1	1	1			19/CH-46F
MAG-14		COL W. R. NOWADNICK	CHERPT			C3	X	3	1	3	4	C3	711031	
H&MS-14		LTCOL R. K. SLACK		705		C2	P	2	1	1	2	C2	711001	1/A-6A, 3/EA-6A, 2/F-4B, 4/TA-4F
MABS-14 (-)		MAJ C. M. DOYLE		297	10	C3	P	3	1	2	1	C3	711031	
SU 1, MABS-14 (-)		MAJ B. L. MEEK	BOGUE, NC	223		C1		1	1	1	1			
MATCU-61		CAPT G. P. HAYES		54		C4	P	4	1	4	2	C2	710926	
VMCJ-2 (-)		LTCOL A. W. REALSEN	CHERPT	355	4	C3	R	1	1	3	3	C2	711124	7/EA-6A, 9/RF-4B
DET A, VMCJ-2 (6THFLT)	3*	MAJ R. C. CONWAY	USS SARATOGA	143	1	C1		1	1	1	1			4/EA-6A
VMA(AW)-121		MAJ E. A. BIRZER	CHERPT	218	3	C4	T	2	1	2	4	C3	710930	11/A-6A
VMA(AW)-224 (COM CVW-15)	31*	LTCOL B. R. STANDLEY	USS CORAL SEA	290	7	C2	R	1	1	2	1	C1	710911	12/A-6A
VMA(AW)-332		LTCOL C. L. COMFORT	CHERPT	208	2	C3	T	1	1	2	3	C2	710930	10/A-6A
VMFA-312		MAJ R. G. KROPP		185		C4	P	4	2	4	4	C4	711101	14/F-4B
DET 14, 2D MAW (NAS, KEY WEST)	*		KEY WEST	84		C1		1	1	1	1			5/F-4B
MAG-26		COL G. R. HUNTER	NEW RIVER			C3	R	2	2	3	3	C2	711020	
H&MS-26		MAJ C. E. CANNON		571		C2	X	1	1	1	1	C2	711016	31/CH-46F, 17/CH-53A, 11/CH-53D
MABS-26		MAJ Z. V. LAMASCUS		489	38	C3	X	4	1	1	1	C4	711101	
MATCU-64 (MAG-26)	*	CAPT D. V. ESMOND		53		C4	P	4	1	2	3	C3	710915	
VMO-1		LTCOL J. D. PIERCE		183		C2	R	1	2	2	1	C3	711028	17/OV-10A
HMA-269		LTCOL L. W. SMITH		147		C4	T	4	1	1	4	C2	711101	18/AH-1J
HML-167		LTCOL H. S. LOWREY JR.		194		C4	S	4	4	4	4	C3	711001	5/UH-1E, 6/UH-1N
HMM-162 (32D MAU)	5*	LTCOL J. W. ALBER	32D MAU	237	3	C1	X	1	1	2	1	C1	711015	12/CH-46F, 4/CH-53D, 2/UH-1E
HMM-261		MAJ D. R. ALLEN JR.	NEW RIVER	255		C2	R	1	1	2	1	C1	710923	21/CH-46F
HMM-263		LTCOL V. M. HAZELBAKER	QUANTICO	100		C4	P	4	4	4	4	C3	710915	20/CH-46D, 12/CH46F
HMM-264		MAJ R. K. GOFORTH	NEW RIVER	273		C1		1	1	1	1			19/CH-46F, 4/CH-53D, 4/AH-1J, 4/UH-1N
HMH-362		MAJ R. F. WILEY		164		C2	R	1	1	2	1	C1	711027	17/CH-53D
HMH-461		LTCOL D. E. WEBB		151		C4	R	2	1	4	2	C3	711003	4/CH-53A, 12/CH-53D
MAG-31		COL N. B. MCCRARY	BEAUFORT			C2	X	3	1	2	3	C2	710930	
H&MS-31		LTCOL J. K. COCHRAN		641		C2	R	2	2	2	2	C2	711031	1/C-117D, 2/F-4B, 3/F-4J, 3/TA-4F
MABS-31		MAJ J. L. CUNNINGHAM		338	18	C3	P	3	1	1	3	C3	711103	
MATCU-69		CAPT W. T. FARROW		39		C4	P	4	1	2	4	C4	710925	
VMFA-251		MAJ R. P. LEE		261	1	C2	X	2	1	2	3	C2	711001	5/F-4B, 11/F-4J
VMFA-333 (CVA-66)	3*	LTCOL R. PLANT	USS AMERICA	303	1	C2	S	1	2	1	1	C1	711231	12/F-4J
VMFA-451		LTCOL R. J. WEISS	BEAUFORT	281		C2	X	2	1	2	3	C2	710930	15/F-4J
MAG-32		COL I. L. MORGAN	BEAUFORT			C2	X	3	2	2	3	C2	710930	
H&MS-32		MAJ R. L. UPCHURCH		502		C2	X	3	2	2	2	C2	710901	1/C-117D, 5/TA-4F
MABS-32		MAJ H. R. PALMATEER		379	17	C2	X	3	2	2	1	C2	711113	
MATCU-63		1STLT M. M. HENDERSON		32		C3	X	4	2	2	1	C3	711224	
VMA-324		LTCOL G. J. ERTLMEIER		170	1	C2	T	2	1	1	2	C2	710930	4/A-4E, 19/A-4M
VMA-331		LTCOL P. E. BROOKSHIRE		193		C4	T	2	1	2	4	C3	720101	20/A-4E
VMA-513		LTCOL C. M. BAKER		153	1	C4	T	4	4	2	4	C4	711109	7/AV-8A
2D FSR		COL R. G. EYKYN	CAMLEJ	2041	23	C3	P	3	1	1	3	C4	711101	
H&SBN		LTCOL J. B. CANTIENY		602	15	C3	P	3	1	1	3	C2	711101	
SUPPLY BN		LTCOL J. F. FORMAN		721	8	C4	P	4	1	1	4	C4	711001	
MAINT BN		MAJ P. S. GALLIGAN		718		C3	P	3	1	1	3	C4	711001	3/LVTR, 2/M51 VTR

Unclassified

* PARENTHETIC UNIT INDICATES OPCON WHEN DIFFERENT FROM ORGANIZATIONAL STRUCTURE.

TAB 21-8

UNCLASSIFIED

[redacted] UNCLASSIFIED

MARINE CORPS COMMAND CENTER

STATUS OF FMF UNITS**

29 SEPTEMBER 1971

UNIT	NOTE	UNIT COMMANDER	LOCATION	STRENGTH		UNIT READINESS☆								MAJOR EQUIPMENT
						CURRENT						EXPECTED		
				USMC	USN	RATE	RSN	P	S	R	T	RATE	BY	

☆UNIT READINESS RATING CATEGORY

C-1 FULLY COMBAT READY
C-2 SUBSTANTIALLY COMBAT READY
C-3 MARGINALLY COMBAT READY
C-4 NOT COMBAT READY

☆READINESS ABBREVIATIONS

P PERSONNEL READINESS
S SUPPLIES/EQUIPMENT ON HAND
R EQUIPMENT READINESS
T TRAINING READINESS
X COMMANDERS SUBJECTIVE JUDGEMENT
N RESOURCE ALLOCATION BY COGNIZANT SERVICE DOES NOT PERMIT A HIGHER C-RATING

NOTES

1. BLT 1/4 BREAKDOWN ON TAB 34.
2. 31ST MAU BREAKDOWN ON TAB 34.
3. ABOARD USS AMERICA (CVA-66).
4. ASSIGNED III MAF
5. LANFOR&THFLT 1-71 (32D MAU) BREAKDOWN ON TAB 36.
6. LANFORCARIB 1-71 BREAKDOWN ON TAB 36.
7. VMA(AW)-533 (w/10 A-6A AIRCRAFT) AT NAHA, OKINAWA, FOR TRAINING DURING THE PERIOD 16AUG-15OCT71.
8. H&SCO, CO B, 1ST SP BN IN CAIRE STATUS.
9. GTMO BN (REIN) BREAKDOWN ON TAB 36-2.
10. TRUCK CO, 1ST SERV BN (CAIRE).
11. CO C, 7TH ENGR BN (CAIRE).
12. THIS UNIT IS BOTH ADCON/OPCON TO WERS-17 (-).
13. AIR ALERT BATTALION.
14. PERSONNEL AND EQUIPMENT CARRIED IN HQBN, 1ST MARDIV.
15. VIEQUES TRNG (DET, H&SCO, CO H, 2/6).
16. UNASSIGNED.
17. INCLUDES STRENGTH CO D, 7TH ENGR BN AND 1ST PLAT, 1ST BRIDGE CO.
18. H&SCO, CO B, CO C, AND CO D, 1ST TANK BN (CAIRE).
19. H&SCO, CO B, AND CO C, 3D AMTRAC BN (CAIRE).
20. PERSONNEL AND EQUIPMENT CARRIED IN HQBN, 2D MARDIV.
21. ONE PLATOON IS DEPLOYED WITH LANFOR&THFLT 1-71 AND ALSO ONE PLATOON WTIH LANFORCARIB 1-71.
22. PERSONNEL AND EQUIPMENT CARRIED IN HQBN, 3D MARDIV.
23. PARTICIPATED IN ROPEVAL 3-71 AT CAMPEN DURING THE PERIOD 8-17SEP71. OPCON TO 7TH MAB.
24. UNASSIGNED.
25. ONE PLATOON IS DEPLOYED WITH LANFOR&THFLT 1-71, ONE PLATOON WITH LANFORCARIB 1-71 AND ONE PLATOON WITH THE GTMO BN.
26. UNASSIGNED.
27. THIS UNIT IS BOTH ADCON/OPCON TO MAG-12. HOWEVER, IS PHYSICALLY LOCATED ON OKINAWA WITH THEIR STRENGTH CARRIED UNDER OKINAWA.
28. UNASSIGNED.
29. TWO OFF & 32 ENL DEPLOYED TO MOROCCO & 1 OFF & 10 ENL DEPLOYED TO GTMO ON A PERMANENT BASIS.
30. BLT 3/4 (3D BN, 4TH MAR, AND BTRY I (REIN), 3D BN, 12TH MAR) AT FUJI FOR TRAINING DURING THE PERIOD 18AUG-10CT71.
31. ABOARD USS CORAL SEA (CVA-43).

** SOURCE: MARES FORSTAT REPORT DATED 7 SEPTEMBER 1971.

Unclassified

UNCLASSIFIED [redacted]

TAB 21-9

C[redacted]

UNCLASSIFIED

MARINE CORPS COMMAND CENTER

DISTRIBUTION OF MAJOR GROUND EQUIPMENT AND AIRCRAFT*

GROUND EQUIPMENT

29 SEPTEMBER 1971

EQUIPMENT		NOTE	TOTAL EQUIP	JAPAN	OKI	7TH FLT MAU s	MID PAC	CAM PEN	29 PALMS			CAM LEJ	GTMO	6TH FLT MAU s	CARIB	OTHER
81MM MORTAR	M29	8	194	8	20	16	16	62				48	8	8	8	
106MM RR	M40A1C	8	179	8	19	16	16	47				48	8	8	8	
107MM	M30		6					6								
105MM HOW TD	M101A	8	161	6	18	12	24	47				48		6		
155MM HOW TD	M114A1		18		18											
155MM HOW SP	M109		54		18				18			18				
155MM GUN SP	M53		18						12			6				
175MM GUN SP			24						12			12				
8" HOW SP	M110		12		2				4			6				
90MM GUN TANK	M48		133		43	10		25				43	7	5		
120MM GUN TANK	M-103		32					15				12	5			
FLAME TANK	M-67		24		8			7				7	2			
VTR	M-51		23		6			5	4			8				
LVTR	M-51		11		3		1	3				4				
LVTP-5 COMD			32		7	2	3	8				11		1		
LVTP-5			342		64	20	44	70				134		10		
LVTE-1			18		8			5				5				

AIRCRAFT

AIRCRAFT	NOTE	TOTAL A/C	JAPAN	OKI	7TH FLT MAU s	MID PAC	EL TORO	SANTA ANA	YUMA	CH PT	BEAU	NEW RIVER	6TH FLT MAU s	CARIB	OTHER
FIXED WING															
C-117D		18	5			1	5			5	2				
KC-130F		24		6			8			10					
C-131F	7	1													1
C-54P/O/R/S/T	7	6	3				1			1					1
TA-4F		53	4			2	5		13	21	8				
TA-4J		10							5	5					
TC-4C		3								3					
T-28B	7	7				5									2
AV-8A		7									7				
A-6A	4/9	78	2	10			19			37					10
EA-6A	1	21	5				2			10					4
RF-4B		26	9				10			7					
F-4B	3	118	14			7	40		23	22	7				5
F-4J	5	118	16			29				29	32				12
A-4E		88	43						24		21				
A-4F		29					29								
A-4M		19									19				
OV-10A	2	48		12		3		7				17			9
US-2A	7	1													1
US-2B	7	2				1									1
HELICOPTERS															
UH-1E	2	59		13	4	8		6				5	2		21
UH-1N		10										10			
AH-1G															
AH-1J		26		4								22			
CH-46D	6	132	3	29	13	30		37							20
CH-46F	6	157						43				90	12		12
CH-53A		76						55				19	2		
CH-53D		92		19	4	9						56	4		
VH-34D		1				1									
UH-34D	7	3				2									1

Unclassified

NOTES:
1. DET, VMCJ-2 ABOARD USS AMERICA (CVA-66) IN "OTHER" (4/EA-6A A/C ASSIGNED). AFLOAT MED.
2. AT CAMPEN IN "OTHER".
3. AT KEY WEST IN "OTHER".
4. AT NAHA, OKINAWA, FOR TRAINING (16AUG-15OCT71).
5. ABOARD USS AMERICA (CVA-66)(VMFA-333)(12/F-4J) IN "OTHER".
6. AT QUANTICO IN "OTHER".
7. AT FMFLANT, NORFOLK, VA. IN "OTHER".
8. AT FUJI TRAINING, BLT 3/4 AND BTRY "I" (REIN), 3D BN, 12TH MAR.
9. ABOARD USS CORAL SEA (CVA-43) VMA(AW)-224 (10/A-6A) IN "OTHER".

*SOURCE: [illegible] FORSTAT REPORT DATED 7 SEPTEMBER 1971.

UNCLASSIFIED

[redacted]

TAB-23

[redacted]

UNCLASSIFIED

MARINE CORPS COMMAND CENTER

29 SEPTEMBER 1971

FLEET MARINE FORCE DISPOSITION

(6) VMA(AW)-224 (10/A6A, 4/KA-6D A/C)
ABOARD USS CORAL SEA (CVA-43)
AT ALAMEDA, CALIFORNIA

LANFOR6THFLT 2-71 (1)
34TH MAU
* BLT 1/2
HMM-264
ENROUTE ROTA, SPAIN

LANFOR6THFLT 1-71 (4)
32D MAU
BLT 3/2
HMM-162
ENROUTE ROTA, SPAIN

7TH MAB (2)
HQ, 7TH MAB
7TH MARINES
BLT 2/1
PROV MAG-50
AT CAMPEN

DET A, VMCJ-2 (4/EA-6A A/C) (3)
VMFA-333 (12/F-4J A/C)
ABOARD USS AMERICA (CVA-66)
OPS IONIAN SEA/AEGEAN SEA

I MAF
1ST MARDIV (-)(REIN)
FORTRPS, FMFPAC
3D MAW

JAPAN
1ST MAW

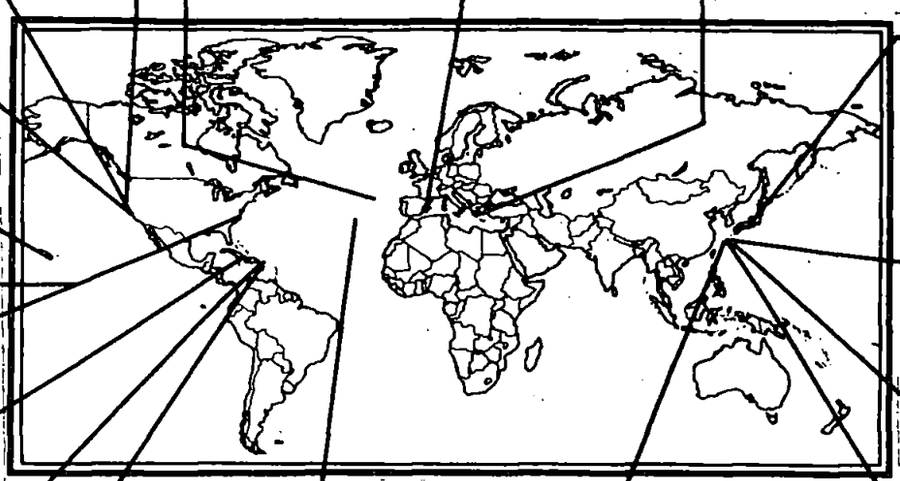

HQ, FMFPAC
1ST MARBDE
3D MAR (-)(REIN)
MAG-24

LANFORCARIB 2-71
BLT 2/6
AT CAMLEJ

HQ, FMFLANT
2D MARDIV (-)(REIN)
FORTRPS, FMFLANT
2D MAW

BLT 1/4
AT OKINAWA
(STAND-DOWN STATUS)

OKINAWA
III MAF
3D MARDIV (-)(REIN)
MAG-36

GTMO BN (-) (REIN)
2D BN, 8TH MAR
BTRY B, 1/10
2 PLATS, 2D TANK BN
DET, FSR

NAHA TRAINING
VMA(AW)-533
(16AUG-15OCT71)

VIEQUES TRAINING
DET, H&SCO, 2/6
CO H, 2D BN, 6TH MAR
AT CAMP GARCIA, P.R.

LANFORCARIB 1-71 (7)
BLT 1/6
AT VIEQUES, P.R.

8TH MAB (1)
HQ, 8TH MAB
* BLT 1/2 (LANFOR6THFLT 2-71)
BLT 3/6
PROV MAG-40
ENROUTE NAPLES, ITALY

LANFOR7THFLT (5)
31ST MAU
BLT 2/9
HMM-164
AT BUCKNER BAY, OKINAWA

* BLT 1/2 IS SHOWN AS PART OF THE 8TH MAB AND ALSO AS PART OF THE 34TH MAU. NOTE 1 REFERS.

DISTRIBUTION BY BATTALION/SQUADRON

	INF BNS	VMFA	VMA	VMA(AW)	VMCJ	VMO	VMGR	HMA	HML	HMM	HMH
WESTPAC	6	2	2	1	1	1	1		1	2	1
OKINAWA	(4)						(1)		(1)	(1)	(1)
JAPAN		(2)	(2)	(1)	(1)						
LANDING FORCE	(2)									(1)	
MIDPAC	2	3								1	1
HAWAII	(2)	(3)								(1)	(1)
EASTPAC	10	4	2	3	1	1	1		1	2	2
EL TORO/SANTA ANA		(4)	(2)	(2)	(1)		(1)			(2)	(2)
CAMPEN	(10)					(1)			(1)		
USS CORAL SEA				(1)							
ATLANTIC	8	3	3	2	1	1	1	1	1	3	2
CAMP LEJEUNE	(6)										
CHERRY POINT		(1)		(2)	(1)		(1)				
BEAUFORT		(2)	(3)								
NEW RIVER						(1)		(1)	(1)	(2)	(2)
QUANTICO										(1)	
CARIBBEAN	(2)										
EUROPE	1	1								1	
MEDITERRANEAN	(1)	(1)								(1)	
GRAND TOTAL	27	13	7	6	3	3	3	1	3	9	6

Unclassified

UNCLASSIFIED

TAB 31-1

[redacted]

[redacted]

MARINE CORPS COMMAND CENTER

29 SEPTEMBER 1971

UNCLASSIFIED

FLEET MARINE FORCE MOVEMENTS

	UNIT	ETD/ATD	FROM	DESTINATION	ETA/ATA
	MOVEMENTS 23 - 29 SEPTEMBER 1971				
(3)	VMFA-333	26SEP71	ATHENS, GREECE	OPS IONIAN SEA/AEGEAN SEA	27SEP71
(3)	DET A, VMCJ-2	26SEP71	ATHENS, GREECE	OPS IONIAN SEA/AEGEAN SEA	27SEP71
(4)	LANFOR6THFLT 1-71 (32D MAU)	28SEP71	BARCELONA, SPAIN	ROTA, SPAIN	30SEP71
(5)	LANFOR7THFLT (31ST MAU)	24SEP71	SUBIC BAY, R.P.I.	ARGOPS SOUTH CHINA SEA	25SEP71
(8)	VMCJ-1	24SEP71	IWAKUNI, JAPAN	NAS CUBI POINT, R.P.I.	25SEP71
		29SEP71	NAS CUBI POINT, R.P.I.	IWAKUNI, JAPAN	29SEP71
	BLT 3/4	28SEP71	NUMAZU, JAPAN	OKINAWA	1OCT71
	PROJECTED MOVEMENTS 30 SEPTEMBER - 6 OCTOBER 1971				
(1)	LANFOR6THFLT 2-71 (34TH MAU)	30SEP71	ROTA, SPAIN	CARBONERAS, SPAIN	1OCT71
(3)	DET A, VMCJ-2	1OCT71	USS AMERICA (CVA-66)	ROTA, SPAIN	1OCT71
(3)	VMFA-333	2OCT71	OPS IONIAN SEA/AEGEAN SEA	RHODES ISLAND, GREECE	2OCT71
(4)	LANFOR6THFLT 1-71 (32D MAU)	30SEP71	ROTA, SPAIN	MOREHEAD CITY, NORTH CAROLINA	12OCT71
(5)	LANFOR7THFLT (31ST MAU)	29SEP71	ARGOPS SOUTH CHINA SEA	BUCKNER BAY, OKINAWA	29OCT71
		3OCT71	BUCKNER BAY, OKINAWA	ARGOPS SOUTH CHINA SEA	3OCT71
(7)	LANFORCARIB 1-71	2OCT71	VIEQUES, PUERTO RICO	WILLEMSTAD, CURACOA/ORANJESTAD, ARUBA	4OCT71
	BLT 1/3	30SEP71	CAMP PENDLETON, CALIFORNIA	KANEOHE, HAWAII	1OCT71

NOTES:

(1) THE 8TH MAB (HQ 8TH MAB, BLT 1/2 (LANFORSIXTHFLT 2-71), BLT 3/6 AND PROV MAG -40) WAS ACTIVATED ON 8JUN71 FOR PLANNING PURPOSES AND ACTIVATED ON 13SEP71 FOR OPERATIONS. THE 8TH MAB IS SCHEDULED TO PARTICIPATE IN EXERCISE DEEP FURROW-71, A JOINT AND COMBINED NATO EXERCISE TO BE CONDUCTED DURING THE PERIOD 9-20OCT71 TO INCLUDE AMPHIBIOUS LANDINGS IN TURKISH THRACE BY A COMBINED U.S. AND UNITED KINGDOM/ITALIAN LANDING FORCE. BGEN T. H. MILLER, JR., AWC 2D MAW, IS DESIGNATED AS CG 8TH MAB. THE 8TH MAB DEPARTED CAMP LEJEUNE ON 20SEP71 ENROUTE TO NAPLES, ITALY. EDA NAPLES IS 4OCT71. THE 34TH MAU (HQ 34TH MAU, BLT 1/2 AND HMM-264)(LANFORSIXTHFLT 2-71) DEPARTED MOREHEAD CITY, NORTH CAROLINA, ON 18SEP71 ENROUTE TO ROTA, SPAIN. EDA ROTA IS 30SEP71. THE 34TH MAU IS SCHEDULED TO RELIEVE THE 32D MAU (LANFORSIXTHFLT 1-71) AS LANFORSIXTHFLT ON 30SEP71 AT ROTA, SPAIN. THE 34TH MAU IS SCHEDULED TO DEPART ROTA, SPAIN, ON 30SEP71 ENROUTE TO CARBONERAS, SPAIN, WHERE IT WILL PARTICIPATE IN A TURNAWAY LANDING EXERCISE ON 2OCT71 TO TEST AMPHIBIOUS EMBARKATION AND LOADING PLANS. ENROUTE SOUDA BAY, CRETE (3-6OCT71), AND ANCHORED AT SOUDA BAY (7-8OCT71). WILL BE OPCON TO CG 8TH MAB DURING THE PERIOD 9-20OCT71 FOR PARTICIPATION IN DEEP FURROW-71.

(2) SCHEDULED TO BE DEACTIVATED ON 1OCT71.

(3) VMFA-333 AND DET A, VMCJ-2, ARE CONDUCTING OPERATIONS IN THE IONIAN SEA/AEGEAN SEA (27SEP-1OCT71). VMFA-333 IS SCHEDULEL FOR A PORT VISIT AT RHODES ISLAND, GREECE, DURING THE PERIOD 2-6OCT71. DET A, VMCJ-2, HAS BEEN ABOARD THE USS AMERICA SINCE 27AUG71 VICE THE USS SARATOGA AS PREVIOUSLY REPORTED. DET A, VMCJ-2, IS SCHEDULED TO COMMENCE CROSS-DECK TO THE USS SARATOGA ON 1OCT71 WITH THE AIRCRAFT DEPARTING THE USS AMERICA ENROUTE TO ROTA, SPAIN. THE AIRCRAFT IS SCHEDULED TO BOARD THE USS SARATOGA ON 7OCT71 AND OUTCHOP ON 12OCT71.

(4) ENROUTE ROTA, SPAIN (28-30SEP71). LANFORSIXTHFLT 1-71 (32D MAU) WILL BE RELIEVED AS LANFORSIXTHFLT ON 30SEP71 AT ROTA, SPAIN, BY LANFORSIXTHFLT 2-71 (34TH MAU). THE 32D MAU IS SCHEDULED TO ARRIVE MOREHEAD CITY, NORTH CAROLINA, ON 12OCT71.

(5) CONDUCTING ARGOPS IN THE SOUTH CHINA SEA (25-29SEP71). SCHEDULED FOR A PORT VISIT AT BUCKNER BAY, OKINAWA, DURING THE PERIOD 30SEP-2OCT71. SCHEDULED FOR ARGOPS IN THE SOUTH CHINA SEA DURING THE PERIOD 3-8OCT71.

(6) CONDUCTING PRE-WESTPAC CRUISE TRAINING DURING THE PERIOD 20SEP-20OCT71. THE USS CORAL SEA IS SCHEDULED TO DEPART ALAMEDA, CALIFORNIA, ENROUTE WESTPAC ON 12NOV71.

(7) CONDUCTING TRAINING ASHORE AT VIEQUES, PUERTO RICO (23SEP-1OCT71). ENROUTE WILLEMSTAD, CURACOA/ ORANJESTAD, ARUBA (2-3OCT71) FOR A PORT VISIT DURING THE PERIOD 4-6OCT71.

(8) VMCJ-1 (w/7 RF-4B A/C) IS CONDUCTING TRAINING AT NAS CUBI POINT DURING THE PERIOD 25-29SEP71.

Unclassified

UNCLASSIFIED

TAB 31-2

[redacted]

[redacted]

MARINE CORPS COMMAND CENTER

FMF PACIFIC UNIT LOCATIONS AND STRENGTHS AND OSD CEILING CONSIDERATIONS (WESTPAC)

UNCLASSIFIED

29 SEPTEMBER 1971

RVN

USMC TRANSITIONAL SUPPORT FORCE

NAVFORV	3
HQ STAFF MACV	49
JUSPAO	4
SAE	2
NAVADVGRU	76
SOG	12
DEF COM AGCY	5
SU #1, 1ST ANGLICO	175
EMBASSY SECURITY	156
CORDS	5
DET, H&HS-18	20
DOD SPEC REP	3
ROK LOG TEAM	13
CREDIT ACCOUNT	4
WESTPAC TRANS OFF	1
TOTAL - OSD PROGRAM XIV SPACE AUTHORIZATION	528

	USMC	USN
OSD PROGRAM XIV SPACE AUTHORIZATION	528	
SUB UNIT 1, 1ST ANGLICO	185	10
MACV STAFF/MACV FIELD	177	
NAVADVGRU/MACV UNITS	27	
OTHERS	144	
TOTAL RVN STRENGTH AS OF 23SEP71.	533	10

OKINAWA

III MAF (TF-79)

HQ, III MAF

3D MARDIV (-) (REIN) (TF-79.2)

HQ, 3D MARDIV (-)(REIN)
- 4TH MARINES
  - 1/4 (BLT)
  - 2/4
  - 3/4
- 9TH MARINES
  - 1/9
  - 2/9 (31ST MAU)
  - 3/9

1ST MAW

MAG-36

VMGR-152	(KC-130F)
VMO-6 (-)	(OV-10A)
HMH-462	(CH-53D)
HMM-164	(CH-46D/CH-53D/UH-1E)(31ST MAU)
HMM-165	(CH-46D)
HML-367	(UH-1E)

- 3D FSR

	USMC	USN
(1) OSD PROGRAM XIV SPACE AUTHORIZATION	19,249	934
OKINAWA STRENGTH RECAPITULATION		
III MAF		
HQ, III MAF	131	
3D MARDIV (-)(REIN)	12,364	560
1ST MAW ELEMENTS	2,303	24
3D FSR	2,787	41
(2) TOTAL III MAF	17,585	625

JAPAN

1ST MAW (TF-79.3)

HQ, 1ST MAW

MAG-12

VMA-211	(A-4E)
VMA-311	(A-4E)
VMA(AW)-533	(A-6A)

MAG-15

VMFA-115	(F-4B)
VMFA-232	(F-4J)
VMCJ-1	(EA-6A/RF-4B)

	USMC	USN
(3) OSD PROGRAM XIV SPACE AUTHORIZATION	7,000	
JAPAN STRENGTH RECAPITULATION		
HQ, 1ST MAW	695	37
1ST MAW	4,930	51
TOTAL 1ST MAW	5,625	88

NOTES
(1) THIS FIGURE INCLUDES 459 NON-FMF SPACES NOT REFLECTED BELOW.
(2) LESS ONE MAU AFLOAT AND CHARGEABLE TO COMSEVENFLT.
(3) THIS FIGURE INCLUDES 921 NON-FMF SPACES NOT REFLECTED BELOW.

UNCLASSIFIED

SOURCES: RVN STRENGTH: COMUSMACV WEEKLY STRENGTH REPORT MSG 250723Z SEP71.

OKI/JAPAN STRENGTH: MARES FORSTAT REPORT DATED 7SEP71.

Unclassified

TAB 33

[redacted]

UNCLASSIFIED

Department of Defense

NUMBER OF CASUALTIES INCURRED BY U. S. MILITARY PERSONNEL
IN CONNECTION WITH THE CONFLICT IN VIET-NAM

Cumulative from January 1, 1961 through September 18, 1971

29 SEPTEMBER 1971

	Army	Navy *	Marine Corps	Air Force	Total
A. CASUALTIES RESULTING FROM ACTIONS BY HOSTILE FORCES					
1. Killed	25,174	1,050	11,466	455	38,145
2. Wounded or Injured					
a. Died of wounds	3,491	140	1,449	44	5,124
b. Nonfatal wounds					
Hospital care required	96,120	4,089	51,356	814	152,379
Hospital care not required	104,020	5,842	37,163	2,296	149,321
3. Missing					
a. Died while missing	1,643	182	5	395	2,225
b. Returned to control	48	7	6	26	87
c. Current missing	258	113	80	560	1,011
4. Captured or Interned					
a. Died while captured or interned	15	-	3	2	20
b. Returned to control	56	3	5	6	70
c. Current captured or interned	63	144	23	235	465
5. Deaths					
a. From aircraft accidents/incidents					
Fixed Wing	90	155	139	696	1,080
Helicopter	2,243	62	429	59	2,793
b. From ground action	27,990	1,155	12,355	141	41,641
TOTAL DEATHS a/	30,323	1,372	12,923	896	45,514
B. CASUALTIES NOT THE RESULT OF ACTIONS BY HOSTILE FORCES					
6. Current Missing	129	-	12	-	141
7. Deaths					
a. From aircraft accidents/incidents					
Fixed Wing	250	172	45	279	746
Helicopter	1,698	52	242	18	2,010
b. From other causes	4,763	610	1,391	261	7,025
TOTAL DEATHS	6,711	834	1,678	558	9,781

a/ Sum of lines 1, 2a, 3a and 4a.

*Navy figures include a small number of Coast Guard casualties.

Department of Defense
OASD (Comptroller)
Directorate for Information Operations
September 22, 1971

~~UNCLASSIFIED~~

TAB 45-2

Unclassified

UNCLASSIFIED

[redacted]

MARINE CORPS COMMAND CENTER

29 SEPTEMBER 1971

DISPOSITION AND STRENGTH OF MAJOR US AND FW FORCES IN RVN

DISPOSITION

UNCLASSIFIED

MR RECAP

MR I*		XXIV CORPS
220 MILES LENGTH@		30-75 MILES WIDTH
14,600 SQ MI AREA		2,860,300 CIV POP
		101ST ABN DIV (AM)
USA	19 BNs	23D INF DIV(AMERICAL)
ARVN	36 BNs	2D ROKMC BDE
ROKMC	4 BNs	147TH VNMC BDE
VNMC	6 BNs	258TH VNMC BDE
ARVN CAV	4 BNs	1ST ARVN DIV
		2D ARVN DIV
TOTAL	69 BNs	

MR II*		SRAG (NHA TRANG)
315 MILES LENGTH@		45-130 MILES WIDTH
31,300 SQ MI AREA		2,898,200 CIV POP
USA	3 BNs	
ARVN	32 BNs	ROK CAP INF DIV
ROK	18 BNs	9TH ROK DIV
ARVN CAV	3	22D ARVN DIV
TOTAL	56 BNs	23D ARVN DIV

MR III*		TRAC (LONG BINH)
90 MILES LENGTH@		55-115 MILES WIDTH
10,100 SQ MI AREA		5.133.000 CIV POP
USA	5 BNs	2D BDE, 25TH INF DIV
ARVN	54 BNs	1ST AUSTRALIAN TF
AUSTRALIA	2 BNs	ROYAL THAI VOL REGT
THAILAND	3 BNs	1ST CAV DIV (AM)
ARVN CAV	5 BNs	5TH ARVN DIV
VNMC	3 BNs	18TH ARVN DIV
		25TH ARVN DIV
TOTAL	72 BNs	369TH VNMC BDE
		1ST ARVN ABN DIV

MR IV*		DRAC (CAN THO)
195 MILES LENGTH@		35-115 MILES WIDTH
14,600 SQ MI AREA		5.700.1000 CIV POP
ARVN	41 BNs	7TH ARVN DIV
ARVN CAV	5 BNs	9TH ARVN DIV
		21ST ARVN DIV
TOTAL	46 BNs	

@ Coastal Arc

* See RVN Recap note

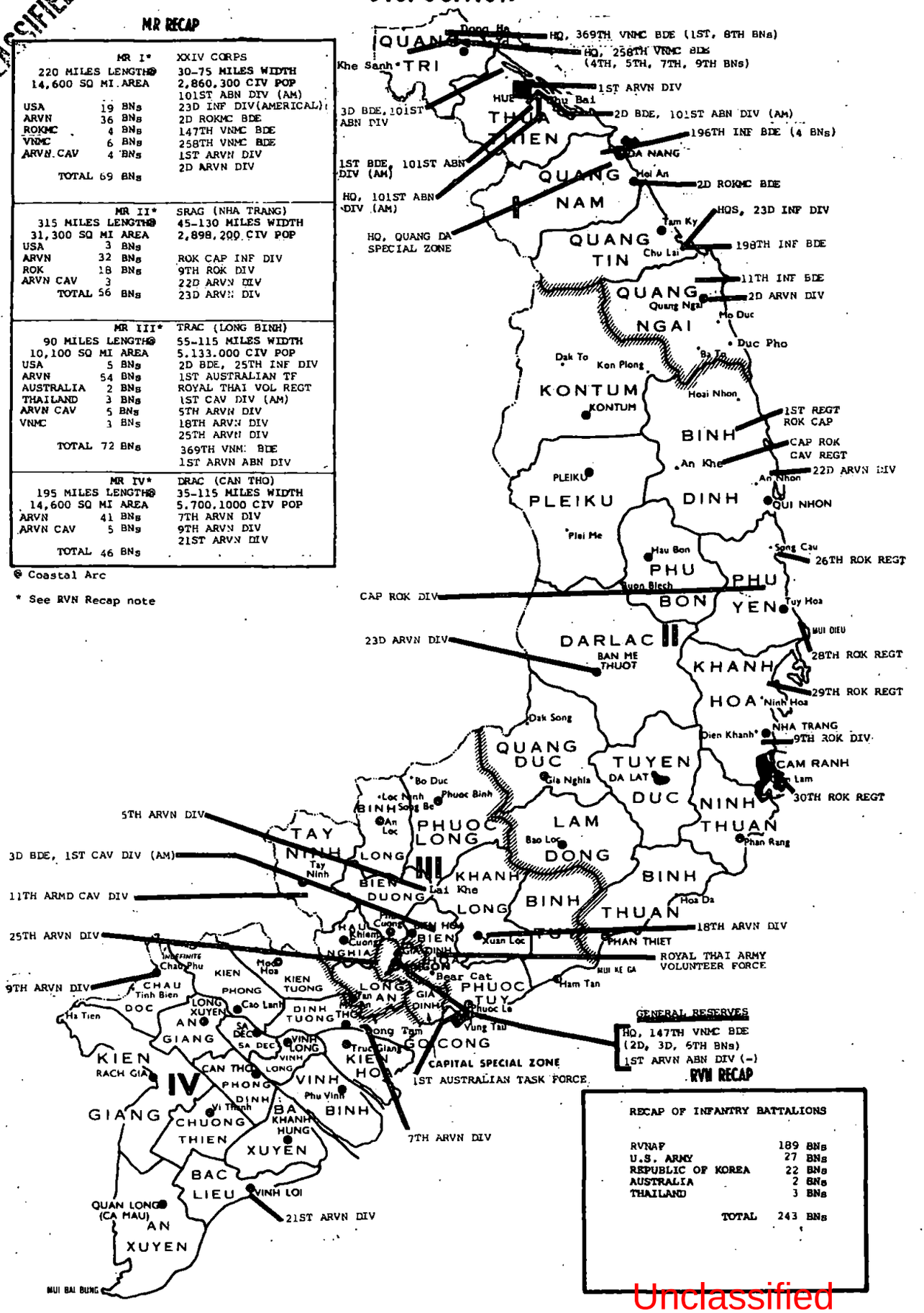

RVN RECAP

RECAP OF INFANTRY BATTALIONS	
RVNAF	189 BNs
U.S. ARMY	27 BNs
REPUBLIC OF KOREA	22 BNs
AUSTRALIA	2 BNs
THAILAND	3 BNs
TOTAL	243 BNs

Unclassified

TAB 46-1

[redacted]

UNCLASSIFIED

~~CONFIDENTIAL~~

MARINE CORPS COMMAND CENTER

STRENGTHS*

UNCLASSIFIED

RVN ARMED FORCES (RVNAF) 29 SEPTEMBER 1971

ARMY (ARVN)	412,549
NAVY (VNN)	41,259
AIR FORCE (VNAF)	51,192
MARINE CORPS (VNMC)	13,646
REGIONAL FORCES (RF)	290,979
POPULAR FORCES (PF)	248,299
TOTAL RVNAF	1,057,924

UNITED STATES FORCES

ARMY	168,122
NAVY	9,883
AIR FORCE	35,315
MARINE CORPS	533
COAST GUARD	98
TOTAL U.S.	213,951

FREE WORLD MILITARY ASSISTANCE FORCES (FWMAF)

REPUBLIC OF KOREA	48,104
AUSTRALIA	5,916
PHILIPPINES	83
THAILAND	6,363
NEW ZEALAND	272
REPUBLIC OF CHINA	31
SPAIN	6
TOTAL FWMAF	60,775

TOTAL FORCES IN RVN 1,332,650

★ SOURCE: RVNAF - MACV MONTHLY RPT OF GVN STRENGTH AS OF 31JUL71.
ALL OTHERS - MACV WEEKLY STRENGTH RPT AS OF 2400, 23SEP71.

UNCLASSIFIED

Unclassified

TAB 46-2

~~CONFIDENTIAL~~

[redacted]

UNCLASSIFIED

MARINE CORPS COMMAND CENTER

REPUBLIC OF KOREA MARINE CORPS

29 SEPTEMBER 1971

Commandant: General LEE, BYUNG MOON

Senior Marine Advisor: Colonel Howard T. PITTMAN, USMC

Strength: 32,360 (JUN71)

The Headquarters of the Republic of Korea Marine Corps (ROKMC) is located in Seoul. Marine Barracks are located in Seoul and the major Naval Bases at Inchon, Mokpo, Chejudo, Chinhae, Pusan, and Mukho. The ROKMC Supply and Maintenance Depot as well as the ROK Marine Schools Base are located at Chinhae. The Schools Base offers Recruit Training, NCO School, Supply School, LVT School, Officer Candidate Course, Drill Instructor School, Senior Amphibious Warfare School, English Language Training, and the ROKMC Command and Staff College. The ROK Marine Corps Amphibious Base at Pohang houses the 1st ROKMC Division (-). Special Training Unit to support ROK Marine personnel assigned to the 2d ROKMC Brigade (Blue Dragons) in Vietnam. The ROKMC is operationally organized as indicated below:

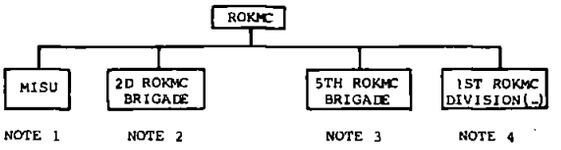

NOTE 1: Marine Island Security Unit (MISU) is a defense force approximating a reinforced Infantry Battalion in size and weaponry. It is located on the offshore islands of the Westerly extension of the DMZ mandated to the United Nations. Although it is administratively controlled by HQ, ROKMC, it is under the operational control of Commander, ROK Fleet. The organization of the MISU is indicated on Chart 1.

NOTE 2: The 2d ROK Marine Brigade is deployed to the Republic of Vietnam and organization is indicated on Chart 2.

NOTE 3: The 5th ROK Marine Brigade is currently deployed in a defensive role along the DMZ on the Kimpo Peninsula. It is administratively controlled by HQ, ROKMC but is under the operational control of I Corps (Group), Eighth U. S. Army. It is considered the Brigade would be fixed in position in the event of open hostilities in Korea and could not be readily redeployed without major adjustment in combat unit locations within the the United Nation Command during peacetime. The Brigade was initially formed from the assets of the list ROKMC Division and represents those units which the division is minus at this time. The current organization of the 5th Brigade is indicated on Chart 3.

NOTE 4: The 1st ROKMC Division (-) located at Pohang is administratively controlled by HQ, ROKMC and under the operational control of Commander, Naval Forces Korea. It is designated as the strategic Reserve for the Defense of the ROK. The organization for the Division (-) is indicated on Chart 4. It should be noted that the Amphibian Tractor Battalion is presently equipped with the LVT-3C.

MARINE ISLAND SECURITY UNIT (MISU)

COMMANDING OFFICER:
BGEN HUR HONG

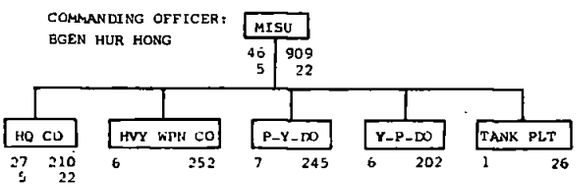

CHART #1

5TH ROK MARINE BRIGADE

COMMANDING GENERAL:
BGEN KIM, Suk Ku

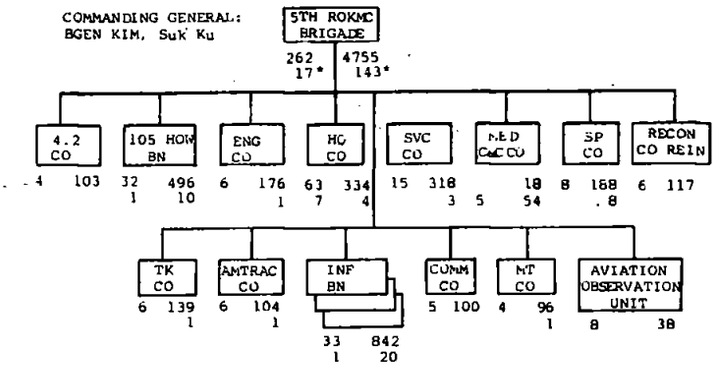

CHART #3

2D ROK MARINE BRIGADE

Strength: 6,073 (SEP71)

COMMANDING GENERAL:
MGEN LEE, Dong Yong

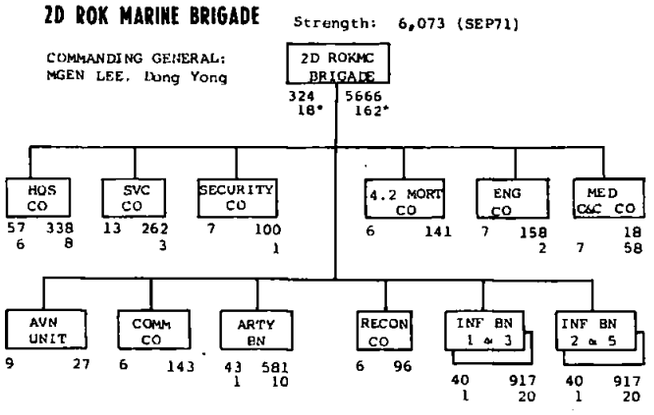

CHART #2

FIRST ROK MARINE DIVISION (-)

COMMANDING GENERAL:
MGEN KIM, YUN SANG

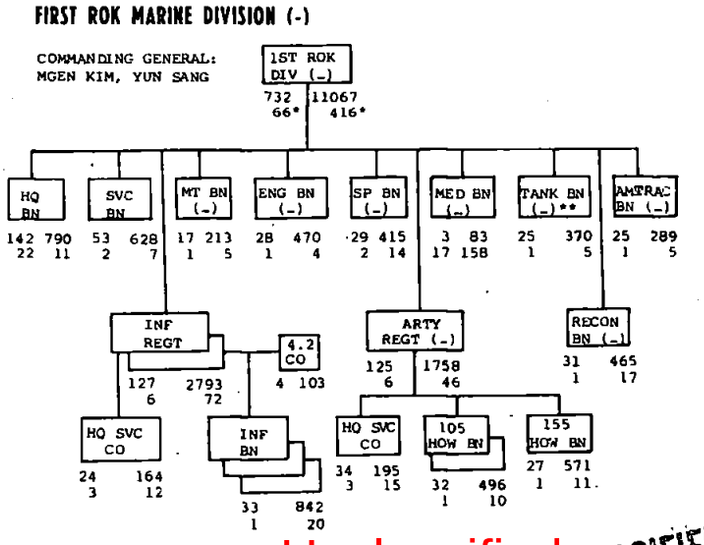

CHART #4

* Second line of figures under each block indicates ROK Navy personnel.
** Minus includes 1 Co Tanks assigned 5th Brigade and 1 Platoon Tanks attached MISU.

Unclassified

UNCLASSIFIED

TAB 48-1

[redacted]